CRAFCO® INC

AN ERGON COMPANY

E-Z SERIES II 10000

Parts Manual - 26458

Revision M

Fill in appropriate fields that apply to this machine

Machine S/N: _____

1st Hose S/N: _____

2nd Hose S/N: _____

1st Pump S/N: _____

2nd Pump S/N: _____

Engine S/N: _____

Compressor S/N: _____

Gear Box S/N (Patcher): _____

Blower S/N (Magnum): _____

Revisions

Rev.	Description	Date
G	Converted to Microsoft Word from Adobe Pagemaker. Changed manual layout.	5/27/2015
H	Updated hose, wand, and trailer light part numbers. Fixed misc. errors.	3/8/16
J	Added pump maintenance section, corrected wand 41629 was 46129	8/17/16
K	Changed start-up procedure and all pages associated to the 4LE2T engine change; Air Comp Oil Changes Sec. 6.15; Air Comp Oil Sec. 6.19; Temp Switch Sec. 9.18; Diagnostic Trouble Codes Sec. 8.5; Hyd Valve Pressure Setting Sec.8.2.2	8/30/17
L	Added jacketed pump information. Note: all EZ1000s now have jacketed pump. Deleted frame solenoid from 4LE2 equipped melters. Warranty changed to two years.	12/5/2017
M	Updated warranty duration and start to invoice date in sections 3.0 and 3.1. Updated section 4.0, heat transfer oil volume to 36.5 gallons. Updated section 9.17, air compressor exploded view and parts list to include safety air shut off valve. Updated Fig. 9-22 parts list, item 6 to PN 45614N. Updated parts list of Fig. 9-36 items 9 and 12 part numbers. Updated section 9.16 image and parts list items 2 and 4 part numbers. Updated Fig. 9-38 and parts list item 3 and 4 part numbers. Updated Fig. 9-39. Updated Fig. 9-40. Updated parts list item 3 and 4 for Fig 9-41. Updated section 5.13 Overnight Heater Use by adding the warning statement. Updated Fig 9-5 parts list conveyor assembly part number.	7/1/2018

EZ1000 Series II Melter - Electric Hose
PN 46200EB

EZ1000 Series II Melter - Electric Hose
PN 47600EC100

EZ1000 Series II Melter - Standard Hose
PN 46200SB

Picture Coming Soon

EZ1000 Series II Melter - Standard Hose
PN 47600SC100

Table of Contents

1.0 About This Manual 1-1
1.1 How to use this manual: 1-1
2.0 Safety Precautions 2-1
2.1 General Safety 2-1
2.2 Personal Safety 2-1
2.3 Equipment or Operational Safety 2-1
2.4 Safety Symbols and Notices 2-2
3.0 Limited Warranty 3-1
3.1 Warranty Claim Instructions 3-2
4.0 Machine Specifications 4-1
5.0 Operating Instructions 5-1
5.1 Preparing the Machine for Start Up 5-1
5.2 Machine Start Up for Electric Hose 5-3
5.3 Machine Start Up for Electric Compressor 5-5
5.4 Altitude Compensation System (46200EB, 46200SB Only) 5-7
5.5 About the Heated Hose, Wand, Valve, and Tip Guard 5-7
5.6 Electric Hose Care and Cautions 5-8
5.7 Storing the Electric Hose for Transport 5-8
5.8 Machine Start Up for Standard Hose 5-9
5.9 Machine Start Up for Standard Compressor 5-10
5.10 Loading Material into the Sealant Tank 5-12
5.10.1 Material Tank Depth Chart 5-13
5.11 Dispensing the Material 5-14
5.12 Shutting Down and Cleaning Out the Machine 5-15
5.13 Overnight Heater Use 5-18
5.14 Storing the Machine 5-18
5.15 Air Compressor: PN 47600EC100, 47600SC100 5-20
5.16 Mounting a Skid Machine 5-21
6.0 Maintenance Instructions 6-1
6.1 Engine 6-1
6.2 Hydraulic System 6-1
6.3 Heat Transfer Oil 6-1
6.4 Wheel Bearing 6-1
6.5 Material Sensor Tube 6-1

Table of Contents

6.6 Cleaning Material Tank and Sensor Area 6-1
6.7 Pump Packing Adjustment and Replacement 6-1
6.8 Lug Nuts 6-2
6.9 Brakes 6-2
6.10 Tongue Jack 6-2
6.11 Temperature Control Calibration 6-3
6.12 Replacing Heat Transfer Oil 6-3
6.13 Cleaning the Melter 6-3
6.15 Maintenance Chart 6-4
6.16 Service Instructions 6-5
6.17 General Maintenance Parts 6-6
6.18 Recommended Spare Parts 6-6
6.19 Recommended Fluids and Lubricants 6-7
6.20 Applicable Brands of Heat Transfer Oil 6-8
6.21 Typical Heat Transfer Oil Specifications 6-8
6.22 Material Pump Replacement 6-9
6.23 Wand Repair Instructions 6-11
6.23.1 Cable Replacement 6-11
6.23.2 Switch Replacement 6-11
6.23.3 Terminal Block Replacement 6-11
6.23.4 Wand Handle Replacement 6-12
6.24 Burner Fuel Filter Replacement 6-3
7.0 How to Use a Multimeter 7-1
7.1 Checking DC Voltage with a Multimeter 7-1
7.2 Checking AC Voltage with Multimeter 7-1
7.3 Checking Resistance (Ohms) 7-1
7.4 Checking Amperage 7-2
8.0 Burner Troubleshooting 8-1
8.1 Sealant Heating Slowly 8-18
8.2 Agitator Troubleshooting 8-19
8.2.1 Symptom: Mixer Does Not Rotate 8-19
8.2.2 Mixer Hydraulic Troubleshooting 8-25
8.3 Hose Troubleshooting 8-28
8.3.1 Symptom: Hose Does Not Heat 8-28
8.3.2 Symptom: Trigger is not Working 8-33

Table of Contents

8.3.3 RTD Sensor Ohms vs. Temperature 8-34
8.4 Pump Troubleshooting 8-36
8.4.1 Symptom: Material Does Not Dispense When the Pump is Activated 8-36
8.4.2 Pump Hydraulic Troubleshooting 8-41
8.5 Engine Diagnostic Trouble Codes (DTC) 8-42
8.5.1 How to use the Diagnostic Trouble Code Table 8-42
8.5.2 Engine DTC Table (47600EC100, 47600SC100) 8-42
9.0 About the Illustrated Parts List 9-1
9.1 Ordering Crafco Parts 9-1
9.2 EZ1000 Series II EZ1000 Melters: 47600EC100 / 47600SB100 / 46200EB / 46200SB 9-2
9.3 EZ1000 Series II Melter Options 9-8
9.4 Tank Detail 9-15
9.5 Plumbing 9-16
9.6 Control Box Assembly 47202 – 46200EB 9-18
9.7 Control Box Assembly 47201 – 46200SB 9-22
9.8 Control Box Assembly 47210 – 47600EC100 9-26
9.9 Control Box Assembly 47215 – 47600SC100 9-30
9.10 Engine Assembly – Non Compressor 9-34
9.11 Engine Assembly – 47600SC100 9-36
9.12 Engine Assembly – 47600EC100 9-38
9.13 Material Flow Control Assembly 9-40
9.14 Hydraulic Compressor Valve Assembly 9-41
9.15 Diesel Burner Assembly 9-42
9.16 Material Pump Assembly 9-44
9.17 Air Compressor Assembly 9-46
9.18 High Output Air Lance Assembly 9-48
9.19 Wand Assembly 9-50
9.20 Diesel Fuel Line Schematic – Non-Compressor 9-52
9.21 Diesel Fuel Line Schematic – Compressors 9-54
9.22 Electrical Schematic – Electric Hose 9-56
9.23 Electrical Schematic – Standard Hose 9-58
9.24 Optional Engine Cover for Compressor Models 9-60
9.25 Hot Air Lance 9-62
9.26 Jacketed Pump System 9-64
9.27 Hydraulic Control Valve Assembly 9-68

Table of Contents

9.28 Hot Oil Pump and Motor 9-70

9.29 Hydraulic System Diagram for Jacketed Pump Machines with the 23 HP engine (46200EB, 46200SB) 9-72

9.30 Hydraulic System Diagram for Jacketed Pump Machines with the 42 HP engine (47600EC100, 47600SC100, 47600ECPA, 47600SCPA) 9-78

10.0 Tools and Accessories 10-1

List of Figures

Fig. 5-1 Hydraulic Fluid Level 5-2
Fig. 5-2 Dipstick 5-2
Fig. 5-3 Heat Transfer Oil Dipstick 5-2
Fig. 6-1 Lug bolt Tightening Sequence 6-2
Fig. 6-2 Temperature Control Calibration 6-3
Fig. 6-3 Material Pump Replacement 6-10
Fig. 6-4 Switch Wire Location 6-12
Fig. 6-5 Wire Routing 6-12
Fig. 6-6 Terminal Block Wiring 6-12
Fig. 6-7 Actuator Spring Location 6-2
Fig. 6-8 Actuator / Trigger Assembly 6-2
Fig. 7-1 Standard Multimeter 7-2
Fig. 7-2 Clamp – On Amp Meter/Multimeter 7-3
Fig. 8-1 ECM 8-7
Fig. 8-2 Diesel Burner Schematic – 4LE2 Engine 8-8
Fig. 8-3 Diesel Burner Schematic – 3C Engine 8-13
Fig. 8-4 Diesel Burner Electrode Adjustment 8-17
Fig. 8-5 Diesel Burner Air Settings 8-17
Fig. 8-6 Checking Din Plug Voltage 8-23
Fig. 8-7 Mixer Circuit 8-24
Fig. 8-8 Hydraulic Valve Pressure Setting 8-26
Fig. 8-9 Din Plug Layout 8-27
Fig. 8-10 Junction Box Voltage Testing 8-30
Fig. 8-11 Hose Circuit Schematic 8-31
Fig. 8-12 Junction Box Wiring 8-32
Fig. 8-13 Pump Circuit Schematic 8-40
Fig. 8-14 Engine Control Display DTC 8-42
Fig. 9-1 EZ1000 Series II Melters: 47600EC100 / 47600SB100 (NOT SHOWN) 9-2
Fig. 9-2 EZ1000 Series II Melter: 47600EC100 / 47600SB100 (NOT SHOWN) 9-4
Fig. 9-3 EZ1000 Series II Melter: 47600EC100 / 47600SB100 (NOT SHOWN) 9-6
Fig. 9-4 EZ1000 Series II Melter Options 9-8

List of Figures

Fig. 9-5 EZ1000 Series II Melter Options 9-10
Fig. 9-6 EZ1000 Series II Melter Options 9-12
Fig. 9-7 EZ1000 Series II Melter Options 9-14
Fig. 9-8 Tank Detail 9-15
Fig. 9-9 Plumbing 9-16
Fig. 9-10 Control Box Assembly 47202 - 46200EB 9-18
Fig. 9-11 Control Box Assembly 47202 - 46200EB 9-20
Fig. 9-12 Control Box Assembly 47201 - 46200SB 9-22
Fig. 9-13 Control Box Assembly 47201 - 46200SB 9-24
Fig. 9-14 Control Box Assembly 47210 – 47600EC100 9-26
Fig. 9-15 Control Box Assembly 47210 – 47600EC100 9-28
Fig. 9-16 Control Box Assembly 47215 – 47600SC100 9-30
Fig. 9-17 Control Box Assembly 47215 – 47600SC100 9-32
Fig. 9-18 Engine Assembly - 46200EB, 46200SB 9-34
Fig. 9-19 Engine Assembly – 47600SC100 9-36
Fig. 9-20 Engine Assembly – 47600EC100 9-38
Fig. 9-21 Material Flow Control Assembly 9-40
Fig. 9-22 Compressor Valve Assembly 9-41
Fig. 9-23 Diesel Burner 9-42
Fig. 9-24 Material Pump Assembly 9-44
Fig. 9-25 Compressor Assembly 9-46
Fig. 9-26 High Output Air Lance Assembly 9-48
Fig. 9-27 Wand Assembly 9-50
Fig. 9-28 Diesel Fuel Line Schematic – Non-Compressor 9-52
Fig. 9-29 Diesel Fuel Line Schematic - Compressors 9-54
Fig. 9-30 Electrical Schematic – 47600EC100 9-56
Fig. 9-31 Electrical Schematic – 47600SC100 9-58
Fig. 9-32 Optional Engine Cover for Compressor Models 9-60
Fig. 9-33 Hot Air Lance (Option) 9-62
Fig. 9-34 Jacketed Pump System 9-64
Fig. 9-35 Jacketed Pump System 9-66

List of Figures

Fig. 9-36 Hydraulic Valve Assembly PN 45433 9-68
Fig. 9-37 Pump and Motor Assy, Hot Oil 9-70
Fig. 9-38 Hydraulic System Diagram – non compressor 9-72
Fig. 9-39 Hydraulic System Diagram – non compressor 9-74
Fig. 9-40 Hydraulic System Diagram – non compressor 9-76
Fig. 9-41 Hydraulic System Diagram - compressor 9-78
Fig. 9-42 Hydraulic System Diagram - compressor 9-80
Fig. 9-43 Hydraulic System Diagram - compressor 9-82

List of Tables

Table 2-1 Safety Symbols and Notices 2-2
Table 2-2 Safety Symbols and Notices (continued) 2-3
Table 4-1 Machine Specifications 4-1
Table 5-1 Preparing the Machine for Start Up 5-1
Table 5-2 Starting the Burner for Electric Hose 5-3
Table 5-3 Starting the Burner for Electric Hose (continued) 5-4
Table 5-4 Starting the Burner for Electric Compressor 5-5
Table 5-5 Starting the Burner for Electric Compressor (continued) 5-6
Table 5-6 Electric Hose Care 5-8
Table 5-7 Hose for Transport Instructions 5-8
Table 5-8 Starting Burner for Standard Hose 5-9
Table 5-9 Starting Burner for Standard Hose (continued) 5-10
Table 5-10 Starting the Burner for Standard Compressor 5-10
Table 5-11 Starting Burner for Standard Compressor (continued) 5-11
Table 5-12 Loading Material into the Sealant Tank 5-12
Table 5-13 Material Tank Depth Chart 5-13
Table 5-14 Dispensing the Material – Electric Hose 5-14
Table 5-15 Dispensing the Material – Standard Hose 5-15
Table 5-16 Shutting Down 46200EB 5-16
Table 5-17 Shutting Down 47600EC100 5-16
Table 5-18 Shutting Down 46200SB 5-17
Table 5-19 Shutting Down 47600SC100 5-17
Table 5-20 Overnight Heater Use 5-18
Table 5-21 Mounting a Skid Machine 5-21
Table 6-1 Maintenance Chart 6-4
Table 6-2 Service Instructions 6-5
Table 6-3 General Maintenance Parts 6-6
Table 6-4 Recommended Spare Parts 6-6
Table 6-5 Recommended Fluids and Lubricants 6-7
Table 6-6 Applicable Brand of Heat Transfer Oil 6-8
Table 6-7 Material Pump Replacement 6-9

List of Tables

Table 6-8 Burner Fuel Filter Replacement 6-3
Table 8-1 Basic Visual Burner Troubleshooting 8-1
Table 8-2 Basic Visual Burner Troubleshooting (continued) 8-2
Table 8-3 Burner Electrical Troubleshooting -4LE2 Engine 8-2
Table 8-4 Burner Electrical Troubleshooting – 4LE2 Engine (continued) 8-3
Table 8-5 Burner Electrical Troubleshooting - 4LE2 Engine (continued) 8-4
Table 8-6 Burner Electrical Troubleshooting – 4LE2 (continued) 8-5
Table 8-7 Electrical Troubleshooting – 4LE2 Engine (continued) 8-6
Table 8-8 Burner Electrical Troubleshooting – 4LE2 Engine (continued) 8-7
Table 8-9 Burner Electrical Troubleshooting – 3C Engine 8-9
Table 8-10 Burner Electrical Troubleshooting – 3C Engine (continued) 8-10
Table 8-11 Burner Electrical Troubleshooting – 3C Engine (continued) 8-11
Table 8-12 Burner Electrical Troubleshooting – 3C Engine (continued) 8-12
Table 8-13 Smoke Coming Out of Exhaust Stack 8-14
Table 8-14 Burner Lights but Shuts Down After 15 Seconds 8-14
Table 8-15 Testing the DC controller 8-15
Table 8-16 Burner Fuel Solenoid Testing 8-15
Table 8-17 Burner Ignition Coil Test 8-16
Table 8-18 Bleeding the Burner – Non-Compressor Only 8-16
Table 8-19 Sealant is Heating Slowly 8-18
Table 8-20 Basic Visual Mixer Troubleshooting 8-19
Table 8-21 Mixer Electrical Troubleshooting 8-20
Table 8-22 Mixer Electrical Troubleshooting (continued) 8-21
Table 8-23 Mixer Electrical Troubleshooting (continued) 8-22
Table 8-24 Mixer Hydraulic Troubleshooting 8-25
Table 8-25 Basic Visual Troubleshooting 8-28
Table 8-26 Electrical Troubleshooting 8-28
Table 8-27 Electrical Troubleshooting (continued) 8-29
Table 8-28 Electrical Troubleshooting (continued) 8-30
Table 8-29 Trigger is not Working 8-33
Table 8-30 RTD Sensor Ohms vs. Temperature 8-34

List of Tables

Table 8-31 RTD Sensor Ohms vs. Temperature (continued)..... 8-35
Table 8-32 Basic Visual Pump Troubleshooting..... 8-36
Table 8-33 Pump Electrical Troubleshooting..... 8-37
Table 8-34 Pump Electrical Troubleshooting (continued) 8-38
Table 8-35 Pump Electrical Troubleshooting (continued) 8-39
Table 8-36 Pump Electrical Troubleshooting (continued) 8-40
Table 8-37 Pump Hydraulic Troubleshooting 8-41
Table 8-38 Engine DTC Table PN 47600EC100, 47600SC100..... 8-42
Table 8-39 Engine DTC Table PN 47600EC100, 47600SC100 (Continued) 8-43
Table 8-40 Engine DTC Table PN 47600EC100, 47600SC100 (Continued) 8-44

Chapter 1 Introduction

1.0 About This Manual

This manual is supplied with each new Crafco EZ Series II 1000 Diesel Melter. The manual assists your machine operators in the proper use of the melter applicator and provides information about the machine's mechanical functions.

Your Crafco EZ Series II 1000 Diesel Melter is specially made to give excellent service and save maintenance expense. However, as with all specially engineered equipment, you get best results at minimum cost if you:

Operate your machine as instructed in this manual.

Maintain your machine regularly as stated in this manual.

1.1 How to use this manual:

This manual is formatted to start each new chapter on the right page. There may be a blank page on the left page if the previous chapter ends on the right page.

If you are viewing this in a digital format (PDF) the following features are available:

1. The Table of Contents, List of Tables, and List of Figures are all hyperlinks, when mouse is left clicked on section, table, or figure you will be sent to that page.
2. The blue highlighted text throughout the manual is a hyperlink, when mouse is left clicked you will be sent to that page, table, or figure.
3. The panel to the left in the PDF is a bookmarks panel, if you left mouse click on any section/heading in the bookmarks panel you will be sent to that page.
4. There is an attachments icon (paper clip) to the left of the bookmarks, this is where you will find full size prints of the control box, electrical, and hydraulic schematics

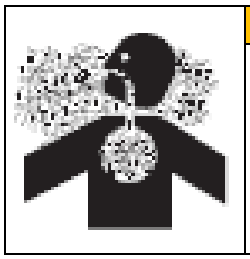

WARNING

California Proposition 65 Warning

Engine exhaust and some of its constituents are known to the State of California to cause cancer, birth defects, and other reproductive harm. Always use care to avoid breathing engine exhaust. Failure to comply could result in death or serious injury.

©2018 by Crafco, Inc. All Rights Reserved

Chapter 2 Safety

2.0 Safety Precautions

For more in-depth safety information, please see Safety Manual (PN 26221) which comes with the machine. Or contact your nearest authorized Crafco Distributor at crafco.com/Distributors.

2.1 General Safety

- Crafco, Inc. assumes no liability for an accident or injury incurred through improper use of the machine.
- Read this manual thoroughly before operating the machine.
- Obey all CAUTION and WARNING signs posted on the machine.
- Make sure an operator fully knows how to operate the machine before using the machine.

2.2 Personal Safety

- The high operating temperatures of this machine and the sealant it contains requires that protective clothing, gloves, hard-soled shoes, and safety glasses or a face shield be worn at all times by operators of the machine.
- Prevent water from going into any part of the machine. If there is indication of water in the heat transfer oil system, warm heating oil to 250-300°F for 2 to 3 hours.
- Bodily contact with hot sealant or heat transfer oil can cause severe burns.
- If the mixer is not stopped before adding solid material, hot material can get on an operator's body and cause severe burns.
- Keep hands, feet, and clothing away from all moving parts.

2.3 Equipment or Operational Safety

- Do not operate the machine in buildings or work areas that do not have sufficient airflow.
- Shut-down the burner and the engine before refilling the fuel tank.
- Make sure mixer stops before adding solid material to the sealant tank. Lift the lid, place the material on the lid and close the lid. The mixer should restart automatically.
- Always keep a correctly maintained fire extinguisher near the machine and know how to use it.
- DO NOT heat transfer oil to a temperature of more than 525°F.
- DO NOT put too much heat transfer oil in the reservoir. The expansion of oil while it heats up can cause overflow. With the machine on level ground, check the oil each day before starting the burner. Add oil to the top mark on the dipstick if required (at 70°F). Use only recommended heat transfer oil. Change the oil after 500 hours of machine operation, or one year, whichever comes first.
- Follow the operating instructions for starting and shutting down the burner. Instructions are mounted on the control box on the machine.
- Calibrate the temperature control operation after each 50 hours of machine operation. Refer to section 6.11 Temperature Control Calibration.
- Replace any hoses which show signs of wear, fraying or splitting.
- Make sure all fittings and joints are tight and do not leak each time the machine is used.
- Do not leave the machine unattended while the burner is lit.
- Tighten all bolts and screws every 100 hours of machine operation.

©2018 by Crafco, Inc. All Rights Reserved

Chapter 2 Safety

2.4 Safety Symbols and Notices

Important safety symbols and notices are marked on the machine and in this manual. Failure to comply could result in equipment damage, operational malfunction, serious injury, or death. Please read and comply with all symbols and notices. The table below includes the most commonly used symbols and notices.

Table 2-1 Safety Symbols and Notices

Symbol	Item	Remarks
WARNING	Warning	Refers to possible bodily injury or death.
CAUTION	Caution	Refers to possible equipment damage or operational malfunction.
	Severe Burn Hazard	Hot material can cause severe burns.
	Protective Shoes	Wear hard-soled work shoes.
	Protective Gloves	Wear heat resistant gloves.
	Protective Face or Eye Wear	Wear face shield or safety glasses.
	Body Crush Hazard	Do not stand between trailer and hitch when hooking melter to truck.

©2018 by Crafco, Inc. All Rights Reserved

Table 2-2 Safety Symbols and Notices (continued)

Symbol	Item	Remark
	Crush Hazard	Keep feet and legs clear.
	Pinch Hazard	Keep hands and feet clear.
	Exhaust Hazard	Avoid breathing engine exhaust.
	Read Manual	Read and understand operator and safety manuals before operating machine.

©2018 by Crafco, Inc. All Rights Reserved

Chapter 3 Warranty Information

3.0 Limited Warranty

Crafco, Inc., through Crafco or one of its affiliated distributors, will replace for the original purchaser free of charge any parts found upon examination by the factory at Chandler, Arizona, to be defective in material or workmanship. This warranty is for a period two years from invoice date, but excludes engine or components, tires, and battery as these items are subject to warranties issued by their manufacturers.

Crafco, Inc. shall not be liable for parts that have been damaged by accident, alteration, abuse, improper lubrication/maintenance, normal wear, or other cause beyond our control.

The warranty provided herein extends only to the repair and/or replacement of those components on the equipment covered above and does not cover labor costs. The warranty does not extend to incidental or consequential damages incurred as a result of any defect covered by this warranty.

All transportation and labor costs incurred by the purchaser in submitting or repairing covered components must be borne by the purchaser. Crafco, Inc. specifically disavows any other representation, warranty, or liability related to the condition or use of the product.

CAUTION
Use of replacement parts other than genuine Crafco parts may impair the safety or reliability of your equipment and nullifies any warranty.

©2018 by Crafco, Inc. All Rights Reserved

Chapter 3 Warranty Information

3.1 Warranty Claim Instructions

Crafco, Inc. warrants parts and machinery purchased through Crafco or one of its affiliated distributors for two years from the invoice date. Wear items are not covered under Crafco, Inc. limited warranty. A wear item is defined as but not limited to: material pumps, sealing tips, tires, etc.

If parts fail to function within the first two years from the invoice date, a return authorization number (RA) must be obtained. If the part was purchased through Crafco, Inc., please contact Crafco returns department at Returns@Crafco.com for an RA number or if purchased through a Crafco distributor please contact your distributor.

Note: if the part has a serial number associated with it, for example; a machine or electric hose or wand, this must be furnished when requesting the RA number. The customer will be emailed or faxed an RA form with all instructions to return the item to Crafco, Inc. See example. If the part is found to be within the two year warranty period and has not been abused or modified, a credit will be issued to the customer's account or credit card. The customer may request the part be replaced instead of a credit, if desired.

Note: All engine warranties are covered through the engine manufacture. If you need information for a distributor in your area please contact us and we will direct you to the closest engine distributor.

All parts returned are tested and evaluated. If the part has been modified in anyway without prior consent from a Crafco, Inc. representative, warranty is void.

Please follow the instructions stated below when calling in a Warranty Claim. Failure to follow these procedures may be cause to void the warranty.

Call your local Crafco Distributor. If you do not know who your local distributor is, call a Crafco Customer Service Representative, (Toll Free 1-800-528-8242) for name, location and telephone number.

On contacting the distributor, be prepared to identify the serial number, model number, engine number, engine manufacturer, and the date of purchase if available.

Should the cause of the malfunction be a defective part, the Distributor will advise you of the procedure to follow for a replacement.

The warranty is valid only for parts, which have been supplied or recommended by Crafco, Inc.

If you have any additional questions regarding warrant repairs and parts, please do not hesitate to call toll free 1-800-528-8242.

For Warranty:
Crafco, Inc.
25527 S. Arizona Ave., Chandler, AZ 85248
Phone: (480) 655-8333 or (800) 528-8242
Fax: (480) 655-1712

For all other inquires:
Crafco, Inc.
6165 W, Detroit St., Chandler, AZ 85226
Phone: (602) 276-0406 or (800) 528-8242
Fax: (480) 961-0513
CustomerService@crafco.com

.

©2018 by Crafco, Inc. All Rights Reserved

Chapter 4 Machine Specifications

4.0 Machine Specifications

Table 4-1 Machine Specifications

Specification	PN 46200EB/SB	PN 47600EC100	PN 47600SC100
Vat capacity	265 gallons (1000 liters)		
Melt Capacity	2100 lbs. (952.5 kg.) per hour		
Heat transfer oil required	36.5 gallons (126.8 liters) at 70°F		
Tank construction	Double boiler type		
Tank opening size	Dual 14” (355.6mm) x 18” (457.2mm)		
Maximum heat input	290,000 BTUs		
Burner and temperature control	Diesel-forced air thermostatic control		
Engine Isuzu diesel	Three cylinder Model 3CH1 – 21.2 BHP @ 3000 RPM	Four cylinder Model 4LE2T – 48.0 BHP @ 2350 RPM	Four cylinder Model 4LE2T – 48.0 BHP @ 2350 RPM
Drive Mechanism	All hydraulic with infinite speed forward and reverse on material pump. Fixed speed agitator.		
Mixer	Full sweep mixer with 2 horizontal paddles, vertical risers		
Axle Capacity	Dual 5,200lbs. (2,358.7 kg)		
Tires	ST225/75R15 Load Range D		
Dry Weight Approximately	5,632lbs. (2,554.6 kg.)	6,823lbs (3,094.9 kg.)	6,823lbs (3,094.9 kg.)
Diesel tank Capacity	30 gallons (113.56 liters)		
Hydraulic Tank Capacity	26 gallons (98.4 liters)		
Air Compressor	N/A	100CFM (2,831.7 l/m) @ 125 PSI (8.61 bar)	100CFM (2,831.7 l/m) @ 125 PSI (8.61 bar)

©2018 by Crafco, Inc. All Rights Reserved

Chapter 5 Operating Instructions

5.0 Operating Instructions

The Crafco EZ 1000 Series II was developed to melt Crafco sealants. However, it works well with most road asphalt and federal specification crack or joint sealants.

Note: DO NOT attempt to operate the machine without using these and all other instructions.

5.1 Preparing the Machine for Start Up

Table 5-1 Preparing the Machine for Start Up

Step	Action
1	Fill the engine fuel tank with diesel fuel. Note: Use No. 1 Diesel fuel in cold weather and No. 2 Diesel fuel in warm weather
2	Check the oil level in the engine crankcase. (Refer to the manufacturer's instruction for the engine.)
3	Check the hydraulic fluid level while at a temperature of 70°F (21.1°C). Add fluid if necessary. See Fig. 5-1 Hydraulic Fluid Level and Temp. Gauge
4	With the machine on level surface, check the heat transfer oil level while at a temperature of 70°F (21.1°C). The oil should be at the full mark on the dipstick. There are two other full marks representing 0°F (-17.8°C) and 150°F (65.6°C). See Fig. 5-2 Dipstick. The oil level changes with temperature due to expansion and contraction. DO NOT overfill or spillage may occur when the oil is heated and expands. See Fig. 5-3 Heat Transfer Oil Dipstick
5	Make sure all toggle switches are turned "OFF" and all temperature control dials are set to their minimum settings.
6	Check the oil level in the air compressor if this machine is so equipped.
	WARNING
	The safe operation of this machine is the operator's responsibility. Use extreme care when operating this machine; safety is the result of being careful and paying attention to details. Remember the diesel flame is approximately 2,200°F (1204.4°C). Some exposed parts of the machine reach 500°F (260°C), the sealant 400°F (204.4°C), and the hydraulic fluid 180°F (82.2°C). Always put on protective clothing, gloves, hard-soled shoes, and safety glasses or a face shield. Be sure that all joints and fittings are tight and leak proof. Immediately replace any hose, which shows any signs of wear, fraying, or splitting. Tighten all bolts, nuts, and screws every 100 hours.

©2018 by Crafco, Inc. All Rights Reserved

Chapter 5 Operating Instructions

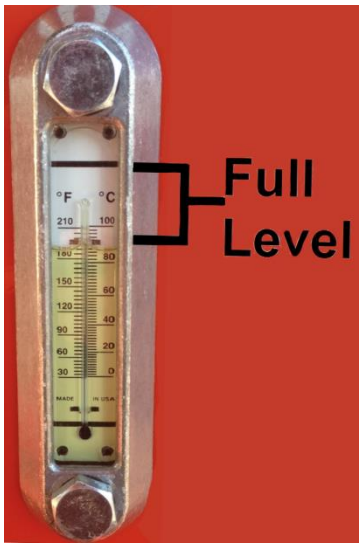

Fig. 5-1 Hydraulic Fluid Level and Temp. Gauge

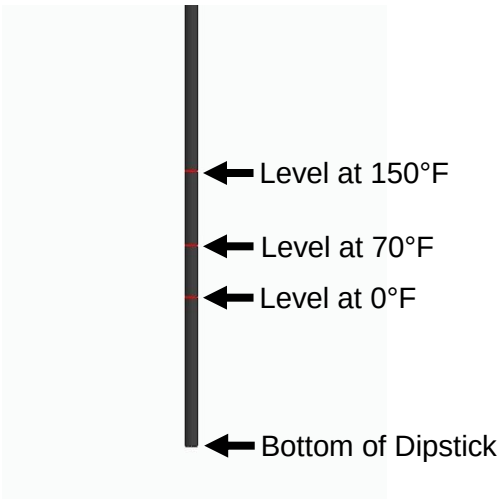

Fig. 5-2 Dipstick

Fig. 5-3 Heat Transfer Oil Dipstick

©2018 by Crafco, Inc. All Rights Reserved

5.2 Machine Start Up for Electric Hose

Table 5-2 Starting the Burner for Electric Hose

Step	Action
1	Fully open the exhaust stack cover.
2	Start the engine. (Refer to the manufacturer's instructions for the engine).
3	Turn the "POWER" toggle switch in the control box to the "ON" position. The red light marked "BURNER" will illuminate indicating that the material and hot oil temperatures are below set point. When the red light goes off this indicates the material or oil temperatures are up to the set point. **NOTE:** Just because this light is illuminated does not indicate the burner is actually working.
4	Turn "HOSE SELECTOR" switch to "ELECTRIC". **Note:** Electric hose will only work if hose selector switch is in the electric hose position.
5	Set the heat transfer oil temperature at 500°F (260°C).
6	Set the material temperature to the manufacturer's recommended temperature.
	CAUTION
	If the burner does not ignite the first time, turn the "POWER" toggle switch to the "OFF" position. Turn the toggle switch to "ON" again; the burner should ignite. If the burner still does not ignite, refer to 8.0.1 Symptoms: Burner will Not Ignite to determine the malfunction.
	Important: The solid material in the tank melts first around the walls, bottom, and around the center tower of the tank. The material temperature sensor is located by the wall, therefore, it is possible that at the beginning of the melting process the indicated temperature reaches operating value, but the material between the center tower and the outside wall of the tank is still solid. This is normal, and when the heated hose is ready for operation, most of the material in the tank will be melted and heated to the proper application temperature.
7	Allow the heat transfer oil to continue to heat.
8	When the material reaches 275°F (135°C), the mixer light will illuminate which indicates the mixer can be engaged by turning the toggle switch at the control panel to "FORWARD" position. If the mixer does not move, allow the material to heat longer. **Note:** Mixer speed is preset at the factory and cannot be adjusted. The mixer cannot be engaged until the material reaches 275°F (135°C).
	CAUTION
	Jamming the mixer can cause the hydraulic oil to overheat and damage the machine.
9	The hose automatically turns "ON" when the material temperature reaches 275°F (135°C). The red light marked 'HEATED HOSE" will illuminate when the hose control is calling for heat.
10	Adjust the temperature dial to the manufacturer's recommended temperature. **Note:** The hose reaches operating temperature in approximately 30 minutes.

©2018 by Crafco, Inc. All Rights Reserved

Table 5-3 Starting the Burner for Electric Hose (continued)

Step	Action
11	After the hose reaches the temperature set point, the light in the control box marked "HEATED HOSE" turns off.
12	Once the hose reaches 325°F (162.8°C) the red light marked "PUMP" will illuminate indicating that the temperature interlock will allow operation of material pump.
	Important: The hose must reach 325°F (162.8°C) before dispensing can take place. If the hose does not dispense when the trigger is activated, allow the material to heat longer. If the hose still does not dispense, shut the machine down, locate and remove the plug in the line. The oven must be at 300°F for 20 minutes before attempting to pump. The oven temperature can be regulated by opening the slide gate to increase temperature or close slide gate to decrease temperature. Slide gate is located on passenger side.
13	Remove hose and wand from transport position and place wand tip in shoebox.
14	When sealant reaches application temperature, open "TANK, and RECIRCULATION valves.
15	Reverse pump for 3-5 minutes by turning the pump toggle switch to "PUMP REVERSE". When pump turns freely, return switch to "ON ELECTRIC" position.
16	Depress wand trigger to recirculate material back into the tank to get material flowing freely through the pump. Ensure wand tip is fully inserted into the shoebox with the door closed.
17	When application of material is desired, open "APPLICATOR VALVE" AND close "RECIRCULATION VALVE". See Table 5-14 Dispensing the Material – Electric Hose.
	CAUTION
	DO NOT twist or kink the hose. Avoid sharp bends and continuous twisting by maintaining a minimum 10-inch bend radius. DO NOT use a setting on the hose controller if more than 400°F. DO NOT move or bend the hose when cold: it can cause damage to the hose. DO NOT leave the hose cycling for longer than 30 minutes without dispensing material; coking can occur and permanently damage the hose. DO NOT remove the hose from the boom during operation or kinking will occur.
	Important: It is strongly recommended that the hose be stored in the boom (locked position) when not in use or when in transit. This will prevent twisting or kinking.

©2018 by Crafco, Inc. All Rights Reserved

5.3 Machine Start Up for Electric Compressor

Table 5-4 Starting the Burner for Electric Compressor

Step	Action
1	Fully open the exhaust stack cover.
2	Turn the key to the “ON” position. Allow engine controller to boot up.
2a	To start engine, press “Auto” then “RUN”. Engine will preheat then start. The engine will start and run at 1000 RPM for 30 seconds, then the RPM will increase to medium RPM. When the material temperature reaches 275°F (135°C) the RPM will increase to high RPM which is full throttle.
3	Turn the “BURNER” toggle switch in the control box to the “ON” position. The red light marked “BURNER” will illuminate indicating that the material and hot oil temperatures are below set point. When the red light goes off this indicates the material or oil temperatures are up to the set point. **NOTE:** Just because this light is illuminated does not indicate the burner is actually working.
4	Turn “HOSE SELECTOR” switch to “ELECTRIC”. **Note:** Electric hose will only work if hose selector switch is in the electric hose position.
5	Set the heat transfer oil temperature at 500°F (260°C).
6	Set the material temperature to the manufacturer’s recommended temperature.
	CAUTION
	If the burner fails ignition after 3 attempts the “BURNER LOCKOUT” alarm will sound. To reset burner, hold the “RESET” toggle switch in the “DOWN” position for 5 seconds, then release. The burner should ignite. If the burner still does not ignite, refer to 8.0.1 Symptoms: Burner will Not Ignite to determine the malfunction.
	Important: The solid material in the tank melts first around the walls, bottom, and around the center tower of the tank. The material temperature sensor is located by the wall, therefore, it is possible that at the beginning of the melting process the indicated temperature reaches operating value, but the material between the center tower and the outside wall of the tank is still solid. This is normal, and when the heated hose is ready for operation, most of the material in the tank will be melted and heated to the proper application temperature.
7	Allow the heat transfer oil to continue to heat.
8	When the material reaches 275°F (135°C), the mixer light will illuminate which indicates the mixer can be engaged by turning the toggle switch at the control panel to “FORWARD” position. If the mixer does not move, allow the material to heat longer. **Note:** Mixer speed is preset at the factory and cannot be adjusted. The mixer cannot be engaged until the material reaches 275°F (135°C).
	CAUTION
	Jamming the mixer can cause the hydraulic oil to overheat and damage the machine.
9	The hose automatically turns “ON” when the material temperature reaches 275°F (135°C). The red light marked ‘HEATED HOSE” will illuminate when the hose control is calling for heat.

©2018 by Crafco, Inc. All Rights Reserved

Table 5-5 Starting the Burner for Electric Compressor (continued)

Step	Action
10	Adjust the temperature dial to the manufacturer's recommended temperature. **Note:** The hose reaches operating temperature in approximately 30 minutes.
11	After the hose reaches the temperature set point, the light in the control box marked "HEATED HOSE" turns off.
12	Remove hose and wand from transport position and place wand tip in shoebox.
	Important: The hose must reach 325°F(162.8°C) before dispensing can take place. If the hose does not dispense when the trigger is activated, allow the material to heat longer. If the hose still does not dispense, shut the machine down, locate and remove the plug in the line. The oven must be at 300°F (148.9°C) for 20 minutes before attempting to pump. The oven temperature can be regulated by opening the slide gate to increase temperature or close slide gate to decrease temperature. Slide gate is located on passenger side.
13	When sealant reaches application temperature, open "TANK and RECIRCULATION valves.
14	Reverse pump for 3-5 minutes by turning the pump toggle switch to "PUMP REVERSE". When pump turns freely, return switch to "ON ELECTRIC" position.
15	Depress wand trigger to recirculate material back into the tank to get material flowing freely through the pump. Ensure wand tip is fully inserted into the shoebox with the door closed.
16	When application of material is desired, open "APPLICATOR VALVE" AND close "RECIRCULATION VALVE". See Table 5-14 Dispensing the Material – Electric Hose
	CAUTION
	DO NOT twist or kink the hose. Avoid sharp bends and continuous twisting by maintaining a minimum 10-inch bend radius. DO NOT use a setting on the hose controller if more than 400°F. DO NOT move or bend the hose when cold: it can cause damage to the hose. DO NOT leave the hose cycling for longer than 30 minutes without dispensing material; coking can occur and permanently damage the hose. DO NOT remove the hose from the boom during operation or kinking will occur.
	Important: It is strongly recommended that the hose be stored in the boom (locked position) when not in use or when in transit. This will prevent twisting or kinking.

©2018 by Crafco, Inc. All Rights Reserved

5.4 Altitude Compensation System (46200EB, 46200SB Only)

This unit may be equipped with an Altitude Compensation System. If so, there will be a small boxed housing mounted to the right and aft of the engine. The system is automatic during most operating conditions. However, if the machine is taken from above or below an altitude of 2,624 ft. (800 Meters) while the engine is running, the engine will need to be stopped and then restarted. There is a yellow indicator light that illuminates when the machine is above 2,624 ft. (800 Meters) indicating that the system is active.

5.5 About the Heated Hose, Wand, Valve, and Tip Guard

The Heated Hose

The heated hose supplied with the machine is Teflon-lined with steel over braid. It has a heating element, which runs the length of the hose to heat the material within the hose. The hose is covered with high temperature, durable rubber.

The Wand

The wand has an aluminum tube to protect both the wand and the operator. The pistol grip actuator is equipped with an electric switch which, when depressed, sends a signal to actuate the pump. The wand is equipped with a trigger lock to prevent accidental pump actuation when it is not pumping material. **The trigger must be in the "LOCKED" position at all times except when intentionally pumping material.**

The Valve

The wand has a disposable duckbill valve on the end, which shuts off the flow of material when the pump is turned off and prevents excessive dripping of material. This valve also directs the material into a stream for easy application into the crack. Other sealing tips are available. See 10.0 Tools and Accessories for other sealing tips and options.

Tip Guard

The wand has a Tip Guard installed at the factory only when a duckbill is installed. This Tip Guard is not required when using sealing disk or dripless tip adapter. The purpose of this guard is to prolong the life of the duckbill and to protect the operator in the event of a duckbill failure. Ensure this guard is installed properly before operating equipment. See below.

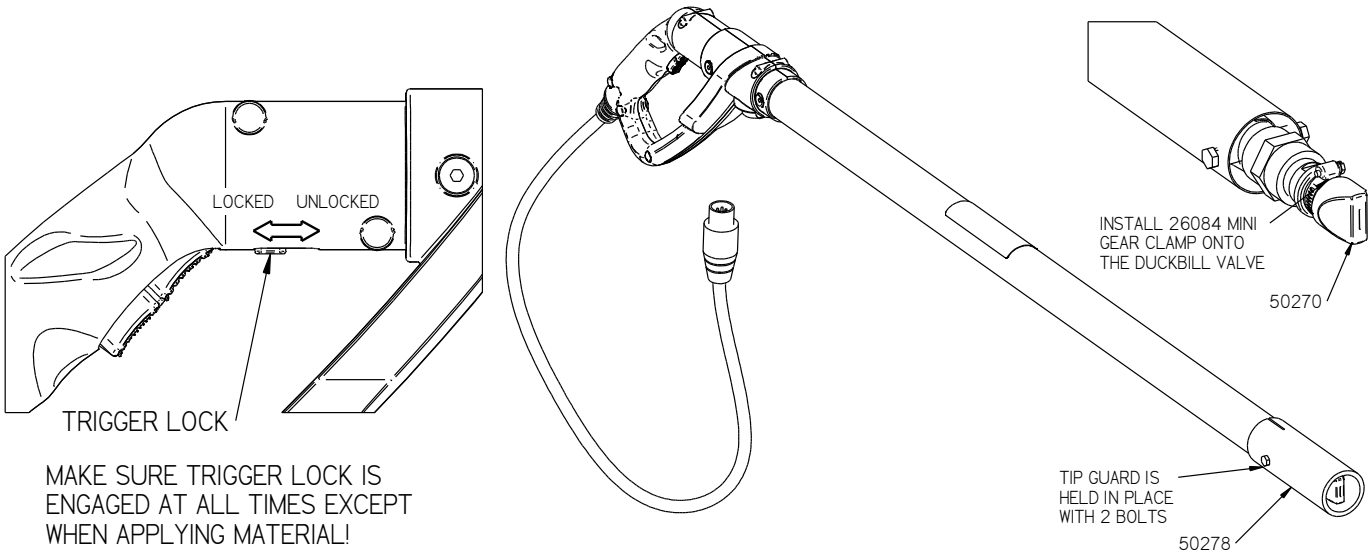

©2018 by Crafco, Inc. All Rights Reserved

Chapter 5 Operating Instructions

5.6 Electric Hose Care and Cautions

Table 5-6 Electric Hose Care

Step	Action
	CAUTION
	Twisting and kinking of the electric hose (used on Super Shots, and EZ Series Melters) causes the hose to fail; the electric heating wires can get shorted out to the metal hose cover and the hose stops heating. This type of failure is not covered under the Crafco warranty.
1	Set the hose temperature at 380°F (193.3°C), or manufacturer recommended operating temperature.
2	Allow the hose to be turned “ON” and heating for a minimum of 30 minutes.
3	Make sure the hose swivel between the hose and wand moves freely. **Note:** Do not twist or bend the hose over sharp edges such as the edge of the frame or tank. Crafco, Inc. recommends you do not work directly under the boom; this may cause damage to the hose.
4	Follow all machine instructions in this manual.
	CAUTION
	Hose damage occurs if: The hose is bent or moved when cold. The hose is twisted or bent at a sharp radius. The hose is moved before being heated a minimum of 30 minutes and set at 380°F. The operator crosses over or under the hose causing the wires between the hose and wand connection to twist or wrap up. The swivel is cold and is not flexible which can cause the hose to twist. The wiring between the hose and the wand is pulled, stressed, or used to support the wand.

5.7 Storing the Electric Hose for Transport

Table 5-7 Hose for Transport Instructions

Step	Action
1	Leave the hose in the boom, swing the boom clockwise towards the front of the machine and lock the boom into position with the latch provided.
2	Place the wand in the wand holder and lock the wand into position with the latch provided.

©2018 by Crafco, Inc. All Rights Reserved

5.8 Machine Start Up for Standard Hose

Table 5-8 Starting Burner for Standard Hose

Step	Action
1	Fully open the exhaust stack.
2	Start the engine. (Refer to the manufacturer's instructions for the engine).
3	Turn the "POWER" toggle switch in the control box to the "ON" position. The red light marked "BURNER" will illuminate indicating that the material and hot oil temperatures are below set point. When the red light goes off this indicates the material or oil temperatures are up to the set point. **NOTE:** Just because this light is illuminated does not indicate the burner is actually working.
4	Turn "HOSE SELECTOR" switch to "STANDARD".
5	Set the heat transfer oil temperature at 450°F (232.2°C).
6	Set the material temperature to 350°F (176.7°C).
	CAUTION
	If the burner does not ignite the first time, turn the "POWER" toggle switch to the "OFF" position. Turn the toggle switch to "ON" again; the burner should ignite. If the burner still does not ignite, refer to 8.0.1 Symptoms: Burner will Not Ignite to determine the malfunction.
	Important: The solid material in the tank melts first around the walls, bottom, and around the center tower of the tank. The material temperature sensor is located by the wall, therefore, it is possible that at the beginning of the melting process the indicated temperature reaches operating value, but the material between the center tower and the outside wall of the tank is still solid. This is normal, and when the heated hose is ready for operation, most of the material in the tank will be melted and heated to the proper application temperature.
7	Allow the heat transfer oil to continue to heat.
8	When the material reaches 275°F (135°C), the mixer light will illuminate which indicates the mixer can be engaged by turning the toggle switch at the control panel to "FORWARD" position. If the mixer does not move, allow the material to heat longer. **Note:** Mixer speed is preset at the factory and cannot be adjusted. The mixer cannot be engaged until the material reaches 275°F (135°C).
	CAUTION
	Jamming the mixer can cause the hydraulic oil to overheat and damage the machine.
9	The pump light will come "ON" when the material temperature reaches 275°F (135°C) indicating the temperature interlock will allow material pump operation. **NOTE:** Hose temperature display will not read an accurate pumping temperature until sealant is being pumped through the hose.
	Important: The oven must be at 300°F (162.8°C) for 20 minutes before attempting to pump. The oven temperature can be regulated by opening the slide gate to increase temperature or close slide gate to decrease temperature. Slide gate is located on passenger side.

©2018 by Crafco, Inc. All Rights Reserved

Table 5-9 Starting Burner for Standard Hose (continued)

Step	Action
10	When sealant reaches 325°F (162.8°C), open “TANK and RECIRCULATION valves, then close APPLICATOR VALVE”.
11	Reverse pump for 3-5 minutes by turning the pump toggle switch to “PUMP REVERSE” position. When pump turns freely, return switch to “ON STANDARD” position. This circulates hot material from bottom of tank back on top of cold material in the tank.
12	Increase heat transfer oil temperature to 500°F (260°C) and material temperature to manufacturers recommended application temperature (Approx. 380° (193.3°C)-400°F (204.4°C)).
13	When application of material is desired, remove hose from oven and connect to wand assembly (Hand tight only). Insert wand tip fully into shoebox with hand wand valve in “OPEN” position.
14	Open the “APPLICATOR VALVE”, close “RECIRCULATION VALVE”.

5.9 Machine Start Up for Standard Compressor

Table 5-10 Starting the Burner for Standard Compressor

Step	Action
1	Fully open the exhaust stack.
2	Turn the key to the “ON” position. Allow engine controller to boot up.
2a	To start engine, press “Auto” then “RUN”. Engine will preheat then start. The engine will start and run at 1000 RPM for 30 seconds, then the RPM will increase to medium RPM. When the material temperature reaches 275°F (135°C) the RPM will increase to high RPM which is full throttle.
3	Turn the “BURNER” toggle switch in the control box to the “ON” position. The red light marked “BURNER” will illuminate indicating that the material and hot oil temperatures are below set point. When the red light goes off this indicates the material or oil temperatures are up to the set point. **NOTE:** Just because this light is illuminated does not indicate the burner is actually working.
4	Turn “HOSE SELECTOR” switch to “STANDARD”.
5	Set the heat transfer oil temperature at 450°F (232.2°C).

©2018 by Crafco, Inc. All Rights Reserved

Table 5-11 Starting Burner for Standard Compressor (continued)

6	Set the material temperature to 350°F (176.7°C).
	CAUTION
	If the burner fails ignition after 3 attempts the "BURNER LOCKOUT" alarm will sound. To reset burner, hold the "RESET" toggle switch in the "DOWN" position for 5 seconds, then release. The burner should ignite. If the burner still does not ignite, refer to 8.0.1 Symptoms: Burner will Not Ignite to determine the malfunction.
	Important: The solid material in the tank melts first around the walls, bottom, and around the center tower of the tank. The material temperature sensor is located by the wall, therefore, it is possible that at the beginning of the melting process the indicated temperature reaches operating value, but the material between the center tower and the outside wall of the tank is still solid. This is normal, and when the heated hose is ready for operation, most of the material in the tank will be melted and heated to the proper application temperature.
7	Allow the heat transfer oil to continue to heat.
8	When the material reaches 275°F (135°C), the mixer light will illuminate which indicates the mixer can be engaged by turning the toggle switch at the control panel to "FORWARD" position. If the mixer does not move, allow the material to heat longer. **Note:** Mixer speed is preset at the factory and cannot be adjusted. The mixer cannot be engaged until the material reaches 275°F (135°C).
	CAUTION
	Jamming the mixer can cause the hydraulic oil to overheat and damage the machine.
9	The pump light will come "ON" when the material temperature reaches 275°F (135°C) indicating the temperature interlock will allow material pump operation. **NOTE:** Hose temperature display will not read an accurate pumping temperature until sealant is being pumped through the hose.
	Important: The oven must be at 300°F (162.8°C) for 20 minutes before attempting to pump. The oven temperature can be regulated by opening the slide gate to increase temperature or close slide gate to decrease temperature. Slide gate is located on passenger side.
10	When sealant reaches 325°F (162.8°C), open "TANK, RECIRCULATION valves, and close APPLICATOR VALVE".
11	Reverse pump for 3-5 minutes by turning the pump toggle switch to "PUMP REVERSE" position. When pump turns freely, return switch to "ON STANDARD" position. This circulates hot material from bottom of tank back on top of cold material in the tank.
12	Increase heat transfer oil temperature to 500°F and material temperature to manufacturers recommended application temperature (Approx. 380°-400°F).
13	When application of material is desired, remove hose from oven and connect to wand assembly (Hand tight only). Insert wand tip fully into shoebox with hand wand valve in "OPEN" position.
14	Open the "APPLICATOR VALVE", close "RECIRCULATION VALVE".

©2018 by Crafco, Inc. All Rights Reserved

5.10 Loading Material into the Sealant Tank

This unit is equipped with a safety interlock system on the loading door. This system disables the mixer hydraulic system when the lid is open to stop the mixer from turning. This is a safety feature for the operator and should never be disabled for any reason.

CAUTION
Personal injury could occur if this safety system is disabled.

Table 5-12 Loading Material into the Sealant Tank

Step	Action
	WARNING Following this procedure prevents hot material from getting on operators and causing severe burns. Never throw blocks of material directly into tank. Hot material splash hazard will result.
1	To load material into the sealant tank first open the lid.
2	Place the solid material on the lid then close the lid.
3	Continue adding solid material at intervals to allow the mixer to rotate without jamming. **Note:** If blocks of solid material are added too quickly, jamming results and slows down the melting process.
	Note: When sealant placement volume is low, or the crew has stopped working for lunch hot oil and material temperatures can equalize. To lower material temperature add a few blocks of cold sealant. This may not be an option if the tank is full.

©2018 by Crafco, Inc. All Rights Reserved

5.10.1 Material Tank Depth Chart

Table 5-13 Material Tank Depth Chart

DEPTH OF MATERIAL TANK	CAPACITY IN GALLONS BOTTOM UP	CAPACITY IN LITERS BOTTOM UP	CAPACITY IN GALLONS TOP DOWN	CAPACITY IN LITERS TOP DOWN
1	9.00	34.07	255.22	966.11
2	18.25	69.08	245.67	929.96
3	27.50	104.10	236.12	893.81
4	36.75	139.11	226.57	857.66
5	46.00	174.13	217.02	821.51
6	55.38	209.64	207.47	785.36
7	64.50	244.16	197.92	749.21
8	74.00	280.12	188.37	713.06
9	83.25	315.14	178.84	676.98
10	92.50	350.15	169.54	641.78
11	102.00	386.11	160.25	606.61
12	111.00	420.18	150.95	571.41
13	120.50	456.14	141.65	536.20
14	129.75	491.16	132.36	501.04
15	139.00	526.17	123.06	465.83
16	148.25	561.19	113.76	430.63
17	157.75	597.15	104.47	395.46
18	167.00	632.16	95.17	360.26
19	176.25	667.18	85.87	325.05
20	185.75	703.14	76.57	289.85
21	195.25	739.10	62.28	235.75
22	204.75	775.06	57.98	219.48
23	214.25	811.02	48.68	184.27
24	224.00	847.93	39.39	149.11
25	233.50	883.89	30.09	113.90
26	243.00	919.86	20.79	78.70
27	250.50	948.25	11.49	43.49
28	262.00	991.78	2.26	8.56
28.25	264.50	1001.24	0	0.00

©2018 by Crafco, Inc. All Rights Reserved

Chapter 5 Operating Instructions

5.11 Dispensing the Material

Table 5-14 Dispensing the Material – Electric Hose

Step	Action
	WARNING
	Put on protective clothing, gloves, hard-soled shoes, and face shield or safety glasses when operating or filling this machine. Read the entire manual before operating the machine. Never point the wand at any part of the body or at any other person. Hot material can cause severe burns.
	Important: Some difficulty may be encountered when starting up on cold days. Although the wand is designed to heat the material all the way down to the tip, on cold days you can place the tip of the wand into the shoebox to facilitate material melting in the valve. Insert the wand tip for only a short time before proceeding.
1	When the material and hose have reached manufacturer's application temperature, you are ready to dispense material.
2	Turn the pump speed control to the lowest setting by turning the speed control knob fully clockwise.
3	Insert the wand tip into the shoebox, depress trigger on the wand and slowly increase pump speed until the pump motor starts to turn.
4	Adjust the pump speed for the desired flow rate for the application. The rate of flow may be varied while the pump is running.
	CAUTION
	Never open flow control more than 2 full turns when using an electric hose as this will cause premature material pump wear.
	Important: It may be necessary to use the recirculation with the electric hose anytime the machine is not going to be used for more than 5-10 minutes when the ambient temperature is below 40°F (4.4°C) or not being used for 20-30 minutes in warmer weather. This is critical after material is up to operating temperature and burner is running intermittently, the oven will cool and all material in the plumbing and pump will solidify. To get the oven hot enough to start pumping again, add several blocks of sealant to lower the material temperature enough to cause burner to ignite. This may not be an option if the tank is already full.

©2018 by Crafco, Inc. All Rights Reserved

Table 5-15 Dispensing the Material – Standard Hose

Step	Action
	WARNING
	Put on protective clothing, gloves, hard-soled shoes, and face shield or safety glasses when operating or filling this machine. Read the entire manual before operating the machine. Never point the wand at any part of the body or at any other person. Hot material can cause severe burns.
1	When the material has reached manufacturer's application temperature, you are ready to dispense material.
2	Turn the pump speed control to the lowest setting by turning the speed control knob fully clockwise.
3	Insert the wand tip into the shoebox, open the ball valve on the wand and adjust the control valve to get close to the desired material flow for the application.
4	Open recirculation valve to get the desired flow rate.
5	This method of operation will give maximum pump life. If the sealant does not flow from the applicator wand, close hand wand valve and place hose and wand back into the oven to allow the sealant to become more liquid, and then repeat procedure.
6	Once sealant is flowing freely, reverse pump and install desired sealing tip or disk and you are ready to begin sealing. See Section 10.0 Tools and Accessories for other sealing tips and disk.
	CAUTION
	Extreme care should be taken when changing or installing sealing tips. Always engage pump reverse if sealant is hot. Hot sealant can cause severe skin burns.

5.12 Shutting Down and Cleaning Out the Machine

When shutting down the machine for the day, Crafco recommends leaving the melter about half full with material. This will give a fairly rapid heat up rate in the morning, but allows enough material to start dispensing right away when the material becomes molten.

©2018 by Crafco, Inc. All Rights Reserved

Table 5-16 Shutting Down 46200EB

Step	Action
1	Leaving the hose in the boom, swing the boom clockwise towards the front of the machine and lock the boom into position with the latch provided.
	CAUTION
	DO NOT kink or twist the hose or permanent damage may result.
2	Place the wand in the wand holder and lock the wand into position with the latch provided.
3	Reverse the pump while removing tip adapter and or duckbill. Continue to reverse for approximately 30 more seconds.
4	Close the “APPLICATOR VALVE” and “TANK VALVE”.
5	Turn the mixer toggle switch to the “OFF” position.
6	Turn the “POWER” switch to the “OFF” position.
7	Stop the engine by turning the key to the “OFF” position.

Table 5-17 Shutting Down 47600EC100

Step	Action
1	Leaving the hose in the boom, swing the boom clockwise towards the front of the machine and lock the boom into position with the latch provided.
	CAUTION
	DO NOT kink or twist the hose or permanent damage may result.
2	Place the wand in the wand holder and lock the wand into position with the latch provided.
3	Reverse the pump while removing tip adapter and or duckbill. Continue to reverse for approximately 30 more seconds.
4	Close the “APPLICATOR VALVE” and “TANK VALVE”.
5	Turn the mixer toggle switch to the “OFF” position.
6	Turn the “Burner” switch to the “OFF” position.
7	Stop the engine by pressing the “OFF” button once. This will throttle down the engine and shut it “OFF”. It will continue to run for a few seconds.
8	Turn “OFF” key switch.

©2018 by Crafco, Inc. All Rights Reserved

Table 5-18 Shutting Down 46200SB

Step	Action
1	Close recirculation valve and reverse the pump for approximately 3 minutes.
1a	Remove wand from hose and wrap hose up in oven while reversing the pump.
2	Close the “APPLICATOR VALVE”.
3	Open recirculation valve. Close the “TANK VALVE”.
4	Turn “Off” pump reverse switch.
5	Turn the mixer toggle switch to the “OFF” position.
6	Turn the “Power” switch to the “OFF” position.
7	Stop the engine by turning the key to the “OFF” position.
	IMPORTANT: Ensure the hose is not touching the tank wall or plumbing.

Table 5-19 Shutting Down 47600SC100

Step	Action
1	Close recirculation valve and reverse the pump for approximately 3 minutes.
1a	Remove wand from hose and wrap hose up in oven while reversing the pump.
2	Close the “APPLICATOR VALVE”.
3	Open recirculation valve. Close the “TANK VALVE”.
4	Turn “Off” pump reverse switch.
5	Turn the mixer toggle switch to the “OFF” position.
6	Turn the “Burner” switch to the “OFF” position.
7	Stop the engine by pressing the “OFF” button once. This will throttle down the engine and shut it “OFF”. It will continue to run for a few seconds.
8	Turn “OFF” key switch.
	IMPORTANT: Ensure the hose is not touching the tank wall or plumbing.

©2018 by Crafco, Inc. All Rights Reserved

5.13 Overnight Heater Use

An overnight heater rod is available as an option. See Page 9-11 for part numbers. The overnight heaters may be used to maintain an overnight heat transfer oil temperature of approximately 200-250°F (93.3°C).

Warning. The overnight heaters are for overnight use only. If the overnight heater is used, the material must be dispensed the next day. If the material can't be dispensed, the machine needs to be heated to mixing temperatures, and agitated to prevent settling. If you don't dispense the material after 1 nights use, you risk damaging the material and possibly the machine due to settled material, which can harden in the bottom of the material tank.

Table 5-20 Overnight Heater Use

Step	Action
1	Attach each heater power cord to its own suitable extension cord.
2	Attach each extension cord to its own outlet rated for 15 amps minimum.
	CAUTION
	Certain machines may have 2 overnight heaters depending on the size of the material tank. Attaching both heaters to the same outlet will most likely pop the circuit breaker inline from the power source. Combining both heaters together will draw too much amperage for most common 15 amp circuits.
	WARNING
	Suitable extension cord size requirements for **110 Volt** use: 25-50 FT • 16-20 Amps • 12 Gauge (Heavy Duty) or 10 Gauge (Extra Heavy Duty) 100 FT • 16-20 Amps • 10 Gauge (Extra Heavy Duty) Suitable extension cord size requirements for **220 Volt** use: 25-50 FT • 8-10 Amps • 14 Gauge (Medium Duty) or 12 Gauge (Heavy Duty) 100 FT • 8-10 Amps • 12 Gauge (Heavy Duty) **Failure to use the correct size extension cord could result in damage and possible fire!**
3	Disconnect the heaters when using the machine's burner system.
	CAUTION
	Do not use the heaters without heat transfer oil in the tank. Doing so will overheat and damage the heater, and it will have to be replaced.

5.14 Storing the Machine

Store the machine in an area where moisture cannot enter the heating system such as heat transfer oil tank, etc. Extended down time can cause moisture build up in the heating tank.

Evidence that moisture has collected in the heat transfer oil is a constant popping noise. If this popping noise is heard, warm the heat transfer oil to 300°F (149°C) for two to three hours to evaporate the moisture. Failure to follow this procedure will cause the heat transfer oil to overflow the tank resulting in possible machine damage and/or personal injury.

Best practice is to check in the material tank prior to starting the burner. If water is present, try and remove as much as possible, heat the material to 300°F (149°C) for two to three hours to evaporate

©2018 by Crafco, Inc. All Rights Reserved

the moisture. Failure to follow this procedure will cause the material to overflow the tank resulting in possible machine damage and/or personal injury.

Store the machine for longer periods with the material tank empty.

5.15 Air Compressor: PN 47600EC100, 47600SC100

Two machine models in the EZ 1000 Series II line of melters include an air compressor unit which is designed to assist in the cleaning of debris from cracks and joints.

- Always use approved high pressure air hoses with properly installed fittings which are not frayed or worn.
- A cold air lance is supplied.
- Consult Crafco, or your hot air lance manufacturer for the appropriately sized hot air lance to use on the following machine models:
    - For PN47600EC100 100 CFM (2,831.7 l/m) @ 125 PSI (8.61 bar)
    - For PN47600SC100 100 CFM (2,831.7 l/m) @ 125 PSI (8.61 bar)
- The engine RPM is set by the factory for maximum engine and air compressor performance.
- The engine RPM will increase to full RPM once the material temperature reaches 275°F (135°C) or if the compressor is switched to the “ON” position.
- If the compressor is switched on before the engine is at full RPM, there will be a short delay as the engine speeds up, then the compressor will engage once the engine is at the correct RPM.
- If the compressor is not needed, turn “OFF” the toggle switch in the control box (labeled compressor)
- The compressor is operated hydraulically and runs continuously. When air is not being discharged, the compressor automatically closes the intake valve and goes into an idle state which takes less energy to operate but still maintains the RPM.
- There is an internal air leak at the air muffler that provides lubrication of the compressor.
- Do not replace the air muffler with aftermarket parts as damage will occur to the compressor.
- Air compressor use in high elevations.
    - The Tier 4 Final engine de-rates itself to produce cleaner emissions when the machine is above 8200ft (2500meters) elevation. Since the engine loses some of its power, you may not be able to run the compressor while the machine is heating, agitating and pumping sealant. If the compressor is used above that elevation, the engine will most likely stall. If the engine stalls, turn off the compressor, turn off the burner power switch, re-start the engine, turn on the burner power switch and continue use without the air compressor.
- PN 47600EC100 or 47600SC100 equipped with the 100 CFM air compressor comes equipped with an air safety shut off valve. In the event of a hose rupture, this valve will significantly reduce the air flow to prevent injuries from a failing hose. This valve will also trigger if the compressor is started without the hose and wand connected. To reset valve, shut off compressor toggle switch for 30 seconds, then turn on the compressor.

©2018 by Crafco, Inc. All Rights Reserved

5.16 Mounting a Skid Machine

Table 5-21 Mounting a Skid Machine

Step	Action
	WARNING
	Only mount the unit to a metal truck bed or any other non-flammable surface. **Failure to use the correct mounting surface could result in damage and possible fire!**
1	Mount with four ½” bolts minimum, using the loading tubes.
	WARNING
2	Leave 15” clearance around the machine. Keep this area clear of any flammable material such as empty sealant boxes. **Failure to keep this area clear could result in damage and possible fire!**

©2018 by Crafco, Inc. All Rights Reserved

Chapter 6 Maintenance Instructions

6.0 Maintenance Instructions

This chapter contains all normal maintenance instructions to properly maintain your machine.

6.1 Engine

Refer to the manufacturer's operating and maintenance instructions for the engine.

6.2 Hydraulic System

Check hydraulic fluid daily. See Table 5-1 Preparing the Machine for Start Up Step 3.

Change hydraulic filter every 250 hours of machine operation. Replace if necessary.

Change hydraulic fluid every 500 hours of operation.

6.3 Heat Transfer Oil

Check the oil level at the start of every day. See Table 5-1 Preparing the Machine for Start Up Step 4.

Change the oil every 500 hours of machine operation or 1 year, whichever comes first. Failure to follow this oil change interval will result in machine damage.

6.4 Wheel Bearing

Pack the wheel bearing every 24,000 miles (38,624 km) or every two years, whichever comes first. Use a good grade of bearing grease.

6.5 Material Sensor Tube

Check for heat transfer oil in tube every 50 hours of operation. 2 ounces (59.1 ml) required.

6.6 Cleaning Material Tank and Sensor Area

The material tank needs to be cleaned every year or as needed for proper operation. As the machine is used, material builds up around the tank walls and sensor guard. The built up material prevents heat from getting to the fresh material and causes longer heat up times. The built up material will also prevent the material temperature sensor from reading accurately because it becomes insulated from the fresh material. The coked material needs to be scraped or chipped from the tank walls. The area between the sensor and sensor guard needs be cleaned also for proper temperature sensing. An air chisel with various sized blades usually works best to break up the material and remove it from the walls. Once the walls and sensor guard areas are cleaned, remove all the loose chunks from the tank, and vacuum out any smaller pieces

6.7 Pump Packing Adjustment and Replacement

Material pump packing should leak a small amount (5-10 drops per minute) during normal use. If packing adjustment is required, operate the pump under normal conditions before making any adjustments. Tighten packing gland nuts evenly (1-2 flats on the nut) until there is 5-10 drops per minute. **DO NOT OVER TIGHTEN** packing gland as that will shorten the life of the packing and wear out the sealing surfaces faster.

To replace packing, remove two nuts, packing gland clip, and packing gland halves. Use a packing hook to remove all seven of the packing rings. New packing rings should be installed one ring at a time, with the joints staggered 180° apart. Each ring should be seated firmly before the next ring is installed.

©2018 by Crafco, Inc. All Rights Reserved

The packing gland nuts should first be evenly tightened with a wrench to seat the packing firmly in the stuffing box and against the shaft. **DO NOT** over tighten the packing. The gland nuts should then be backed off until finger tight. Follow adjusting pump packing at the beginning of this section.

6.8 Lug Nuts

Torque all nuts/bolts before first road use and after each wheel removal. Check and torque after the first 10 miles (16 km), 25 miles (40 km), and again at 50 miles (80 km). Check periodically thereafter.

Torque in stages as follows:

First stage 20-25 foot-pound (ft-lb) (89-111 N)

Second stage 50-60 foot pound (ft-lb) (222-266 N)

Third stage 90-120 foot pound (ft-lb) (400-534 N)

Tighten bolts and nuts in the sequence shown in Fig. 6-1.

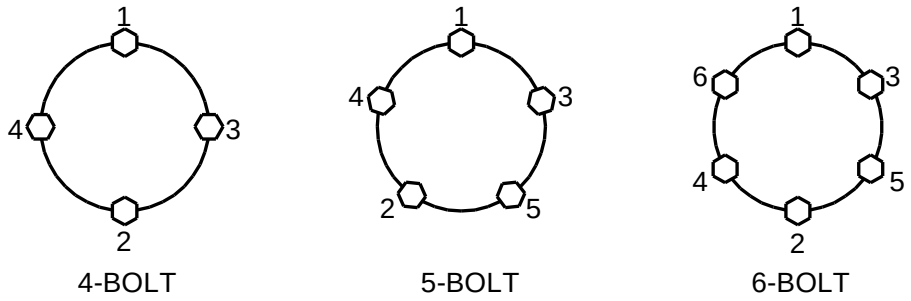

Fig. 6-1 Lug bolt Tightening Sequence

6.9 Brakes

Check the brakes daily.

6.10 Tongue Jack

Lubricate the tongue jack, using a good grade of bearing grease.

6.11 Temperature Control Calibration

Check the control knob calibration weekly. Calibrate by turning the knob counterclockwise. If the marks do not align, loosen screw in knob and align the line on the control knob with the calibration mark on the scale plate. (See Fig. 6-2)

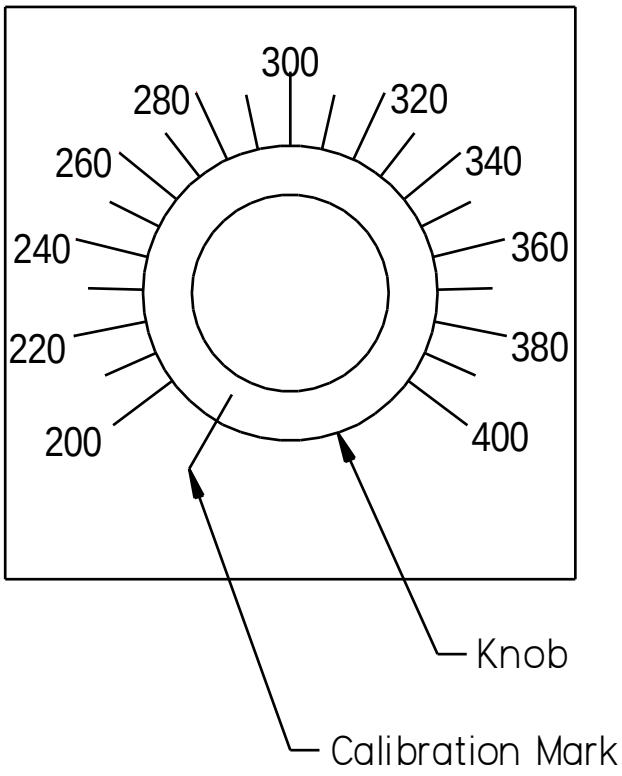

Fig. 6-2 Temperature Control Calibration

6.12 Replacing Heat Transfer Oil

1. Drain oil by removing oil drain cap located under machine.
2. Open ball valve located on rear driver's side of machine before refilling. This allows the air to escape the center column.
3. Fill tank with Heat Transfer Oil using the fill port near the overflow reservoir. Be careful to not overfill. Use the dipstick to measure your fill level.
4. Start burner and heat the heat transfer oil until one drop of oil comes out of ball valve.
5. Close ball valve immediately. **(CAUTION: HOT OIL WILL CAUSE SEVERE BURNS)**

NOTE: THIS PROCEDURE IS NOT REQUIRED FOR DAILY OPERATION.

6.13 Cleaning the Melter

We recommend using Orange-Sol industrial cleaner for cleaning the exterior of the machine. Here is the website for the cleaner; https://www.orange-sol.com/industrial-formula/.

©2018 by Crafco, Inc. All Rights Reserved

6.15 Maintenance Chart

Table 6-1 Maintenance Chart

		Hours			
Possible Cause	Procedure	8	50	250	500
Engine check oil level	Refer to the manufacturer's instructions for the engine	X			
Other engine maintenance	Refer to the manufacture's operating and maintenance instructions for the engine				
Material Sensor Tube	Check for HTO fluid		X		
	Add	As needed			
Heat Transfer Oil	Check	X			
	Change				X
Hydraulic Oil	Check	X			
	Change				X
Hydraulic Oil Filter	Change			X	
Burner	Check burner box insulation				X
	Clean CAD cell				X
	Check Electrodes				X
	Replace burner nozzle				X
Wheel Bearings	Clean and re-pack using a good grade of bearing grease	Every 24,000 miles or two years			
Tongue Jack	Grease using a good grade of bearing grease	Once a year			
Air Compressor Oil	Check		X		
	Change	Once a year			
Material Tank	Scrape out built up material in the material tank	Once a year or as needed			
Material Sensor Guard	Scrape out built up material around guard				X

For a list of parts required for maintenance see Table 6-3 General Maintenance Parts.

©2018 by Crafco, Inc. All Rights Reserved

6.16 Service Instructions

Table 6-2 Service Instructions

Step	Action
1	Do a general inspection of the machine at least once a week.
2	Replace all worn or damaged parts. **Note:** Keep regular replacement items in stock for emergency repairs to prevent costly downtime. See Table 6-4 Recommended Spare Parts
3	Make necessary adjustments and tighten all loose nuts or screws.
4	Watch for leaks. Tighten fittings or repair as necessary.
5	Clean the external surfaces of the machine at regular intervals. **Note:** Refer to the material manufacturer's instructions for recommendations.
6	Follow the recommended maintenance per Table 6-1 Maintenance Chart

For service, find a list of authorized Distributors and service centers at Crafco.com/Distributors.

©2018 by Crafco, Inc. All Rights Reserved

6.17 General Maintenance Parts

Table 6-3 General Maintenance Parts

Quantity	Description	Machine	Part No.
1	Engine and Burner Fuel Filter	46200EB 46200SB	41867
1	Engine Pre-Fuel Filter	47600EC100 47600SC100	47176N
1	Engine Fuel Filter	47600EC100 47600SC100	47167N
1	Engine Oil Filter	46200EB 46200SB	45389
1	Engine Oil Filter	47600EC100 47600SC100	47168N
1	Engine Air Filter	46200EB 46200SB	45391
1	Engine Air Filter	47600EC100 47600SC100	47169N
1	Nozzle, Burner	All	41881
1	Packing, Material Pump	All	29990S
1	Hydraulic Oil Filter	All	45438
Table 6-5	Hydraulic Oil	All	Table 6-5
Table 6-5	Heat Transfer Oil	All	Table 6-6

6.18 Recommended Spare Parts

Table 6-4 Recommended Spare Parts

Quantity	Description	Machine	Part No.
1	Temperature Controller, Material	All	51672
1	Temperature Controller, Electric Hose	46200EB 47600EC100	51691
1	Temperature Controller, Hot Oil	All	43391
1	Temperature Controller, Material	46200SB 47600SC100	43397
1	DC Controller	All	42335
1	Coupling, Fuel Pump	All	41970
1	Electric Hose, 15’	46200EB 47600EC100	51731
1	Solenoid	46200SB 46200EB	39602

©2018 by Crafco, Inc. All Rights Reserved

6.19 Recommended Fluids and Lubricants

Table 6-5 Recommended Fluids and Lubricants

Application	Recommended	Full Point	Machine No.
Fuel	Diesel #1 Cold climate Diesel #2 Warm Climate	30 Gals. (136.4 l)	All Models
Engine Oil	Refer to engine manual	3 Qt.	46200EB, 46200SB,
		2.75 gal. (10.4 l)	47600EC100 47600SC100
Engine Antifreeze	Shell Dexcool ELC AF/C	Ref. Manual	All Models
Hydraulic Oil	Shell AW Hydraulic 46	24 Gals. (109.1 l)	All Models
Heat Transfer Oil	Shell Turbo T 68 (Group II) Table 6-6 Applicable Brand of Heat Transfer Oil	33.5 Gals. (161.4 l)	All Models
Air Compressor Oil	Mattei Rotoroil 8000 F2 (Crafco PN 26017)	1.1 Gal (4 l)	47600EC100 47600SC100

Legend:
PN 46200EB EZ1000 Electric Base
PN 46200SB EZ1000 Standard Base
PN 47600EC100 EZ1000 Electric 100 CFM Compressor
PN 47600SC100 EZ1000 Standard 100 CFM Compressor

©2018 by Crafco, Inc. All Rights Reserved

6.20 Applicable Brands of Heat Transfer Oil

Table 6-6 Applicable Brand of Heat Transfer Oil

Manufacturer	Product Name	Crafco Heat Transfer Fluid
Chevron	Heat Transfer Oil Grade 46	Shell Turbo T 68 (Group II)
Citgo	Hytherm Oil 46	Shell Turbo T 68 (Group II)
Conoco	Hydroclear Heat Transfer Oil	Shell Turbo T 68 (Group II)
Fina	Vulcan Heat Transfer Oil 46	Shell Turbo T 68 (Group II)
Lubrication Engineers	Heat Transfer Oil	Shell Turbo T 68 (Group II)
Exxon Mobile	Caloria HT 43	Shell Turbo T 68 (Group II)
Mobil	Mobiltherm 43	Shell Turbo T 68 (Group II)
Mobil	Mobiltherm 603	Shell Turbo T 68 (Group II)
Phillips 66	Heat Transfer Oil #3	Shell Turbo T 68 (Group II)
Phillips 66	Magnus Oil 68	Shell Turbo T 68 (Group II)

CAUTION

The heat transfer oil in this machine is a grade that has been tested and recommended by Crafco, Inc. Using a grade of oil not specifically recommended by Crafco, Inc., is cause for warranties to be voided.

All oils subjected to high temperatures deteriorate with time and lose many of their characteristics. Tests conducted by Crafco, Inc. have determined that for best results and safety, the heat transfer oil in this machine must be drained and replaced with Crafco, Inc. recommended oil after five hundred (500) hours of machine operation or one (1) year, whichever occurs first.

6.21 Typical Heat Transfer Oil Specifications

ISO	68
Flash Point, COC	445°F (229.4C)
Viscosity @ 100°F-SUS	325
Viscosity @ 210°F-SUS	50
Viscosity Index	95-100
Pour Point	0°F (-17.8C)
Carbon residue	1%

©2018 by Crafco, Inc. All Rights Reserved

6.22 Material Pump Replacement

Table 6-7 Material Pump Replacement

Step	Action
1	Close “TANK VALVE”.
2	Remove the front of the heat compartment.
	WARNING The material in the sealant tank is extremely hot. Bodily contact with hot sealant can cause severe burns.
3	Remove the 6 bolts from both flanges of the double elbow and remove double elbow.
4	Remove the 8 bolts from the tank valve flange.
5	Remove the 4 bolts from the hydraulic motor and loosen setscrew in pump/motor coupling. Remove motor from pump motor mount.
6	Close both Hot Oil Ball Valves and disconnect the hot oil flex hoses from the pump.
7	Remove the 4 bolts from the pump base and remove pump from heat compartment.
8	Remove the lower suction tee and the flanged nipple assembly from the material pump. Make note of tee direction.
9	Install lower suction tee and flanged nipple assembly into new pump.
10	Install material pump in heat compartment. Flange gasket P/N 29060 will also need to be installed at this time using (8) 3/8-16 x 1” bolts, (2) flat washers per bolt (1 on each side of flange), lock washer, and hex nuts. Use (4) 1/2-13 x 1 3/4” bolts, flat washer, lock washer, and hex nuts to attach pump to pump base. Leave all hardware loose until everything is installed.
11	Install double elbow using new flange gaskets P/N29050, 3/8-16 x 1” bolts, (2) flat washers per bolt (1 on each side of flange), lock washer, and hex nut. Leave all hardware loose until everything is installed.
12	Install hydraulic motor on material pump using (4) 3/8-16 x 1 1/4” bolts and lock washers. Tighten setscrew on pump/motor coupling. Connect the flex hoses to the pump open the Hot Oil Ball Valves.
13	Tighten all bolts and nuts.
14	Replace heat compartment using (12) 1/4-20 x 3/4” bolts, flat washers, and lock washers.

Note: Material pump rebuild kits are available, see page 9-44 for part number. If the case bores are larger than 3.851” diameter and the end plates have any wear (not flat) then the rebuild kit may not work or wear properly.

©2018 by Crafco, Inc. All Rights Reserved

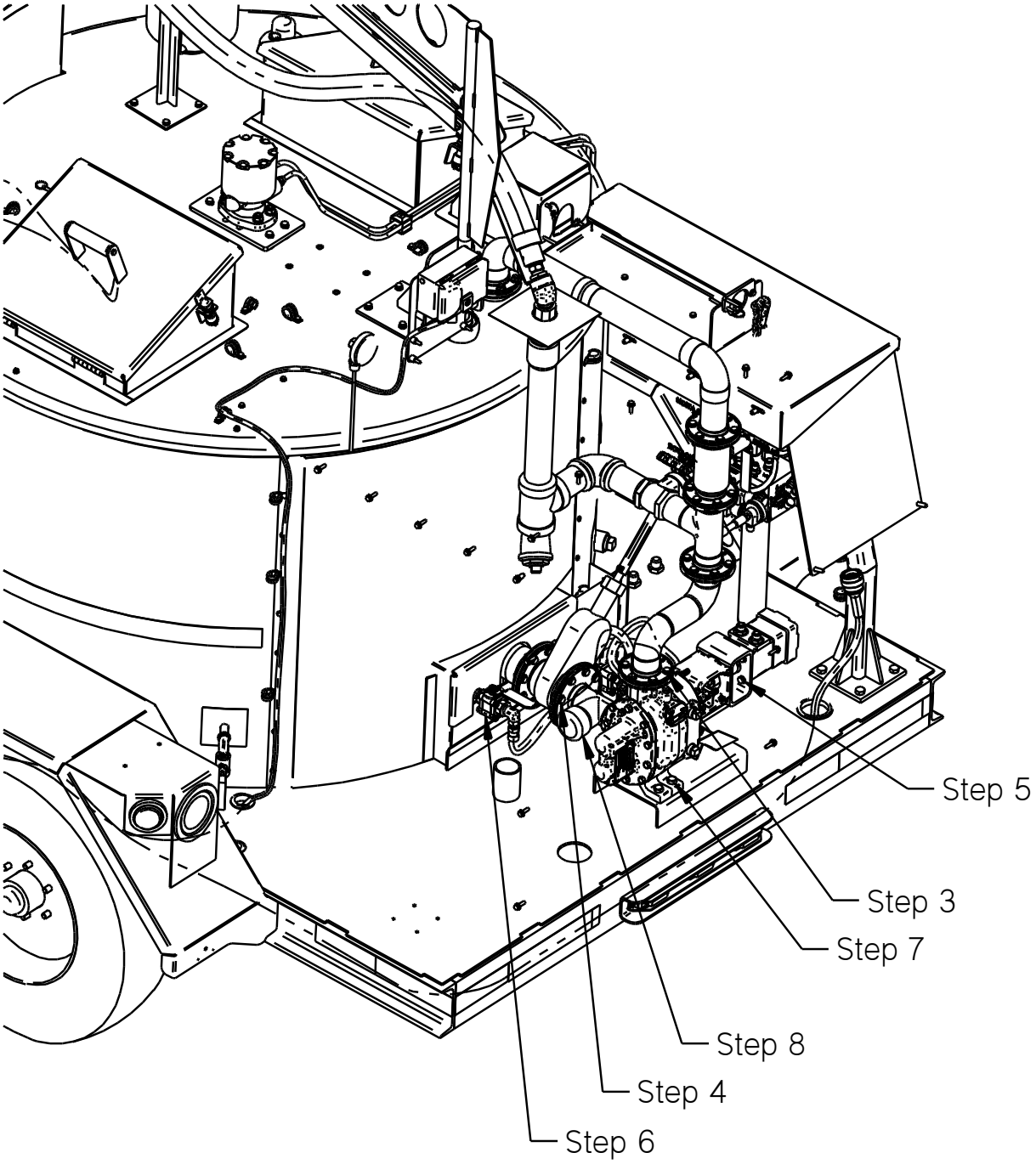

Fig. 6-3 Material Pump Replacement

©2018 by Crafco, Inc. All Rights Reserved

6.23 Wand Repair Instructions

The following sections will address how to replace the wand handle, wand cable, switch, and terminal block of the 52200 wand assembly. Actuator, actuator lock, and spring can also be replaced. See Wand Assembly section for parts breakdown.

6.23.1 Cable Replacement

1. Disconnect the cable from the electric hose. Lay wand on flat surface with socket head screws facing up.
2. Remove (7) #10-32 x 1" socket head screws and (2) 1/4-20 x 1/2" socket head screws.
3. Carefully remove top handle half. **Caution:** Actuator pin may lift actuator and spring from bottom handle half. Do not loose spring or pin.
4. Remove red and orange wire from switch.
5. Remove green, white, and black wires from terminal block.
6. Remove cable from handle.
7. Replace cable in handle. Note: Look for flats on strain relief of cable that correspond to flats on handle.
8. Install red wire on top of switch (see Fig. 6-4 Switch Wire Location), then install orange wire on (NO) terminal (top rear of switch).
9. Strip green, white, and black wires 3/8" and twist wires strands then install (**Note** white black wire is routed under switch see Fig. 6-5 Wire Routing) on open terminals of terminal block. Make sure to install completely under the clamp before tightening screws. Torque screws to 16 in-lbs. Bend all (3) wires over the top of terminal block (see Fig. 6-6 Terminal Block Wiring).
10. Replace top wand handle half.
11. Use blue Locktite® on all external handle screws before installation. Install (7) #10-32 x 1" socket head screws hand tight, then Install (2) 1/4-20 x 1/2" socket head screws hand tight. Now torque all #10-32 screws to 12 in-lbs. and all 1/4-20 screws to 25 in-lbs.
12. Reconnect cable to electric hose.

6.23.2 Switch Replacement

1. Follow steps 1-4 from 6.23.1 above.
2. Remove (2) #4-40 x 1/2" pan head screws from switch, then remove switch from handle.
3. See Fig. 6-7 Actuator Spring Location and Fig. 6-8 Actuator / Trigger Assembly for proper assembly of actuator to switch.
4. Replace switch and install (2) #4-40 x 1/2" screws and tighten.
5. Follow Steps 10-12 from 6.23.1 above.

6.23.3 Terminal Block Replacement

1. Follow steps 1-4 from 6.23.1 above.
2. Remove (2) #10-32 x 5/8" round head machine screw from terminal block then remove terminal block from handle.
3. Replace terminal block and install (2) #10-32 x 5/8" screws and tighten.
4. Follow steps 10-12 from 6.23.1 above. If actuator, pin, and spring need to be reinstalled see Fig. 6-7 Actuator Spring Location and Fig. 6-8 Actuator / Trigger Assembly.

©2018 by Crafco, Inc. All Rights Reserved

6.23.4 Wand Handle Replacement

1. Follow steps 1-6 from 6.23.1 above.
2. Remove actuator, actuator lock, pin, and spring.
3. Remove (2) #4-40 x 1/2” pan head screws from switch, then remove switch from handle.
4. Remove (2) #10-32 x 5/8” round head machine screw from terminal block then remove terminal block from handle.
5. Flip wand over and remove the remaining (2) 1/4-20 x 1/2” screws from the handle. Remove handle from wand tube.
6. Install new handle by reversing previous steps.

Fig. 6-4 Switch Wire Location

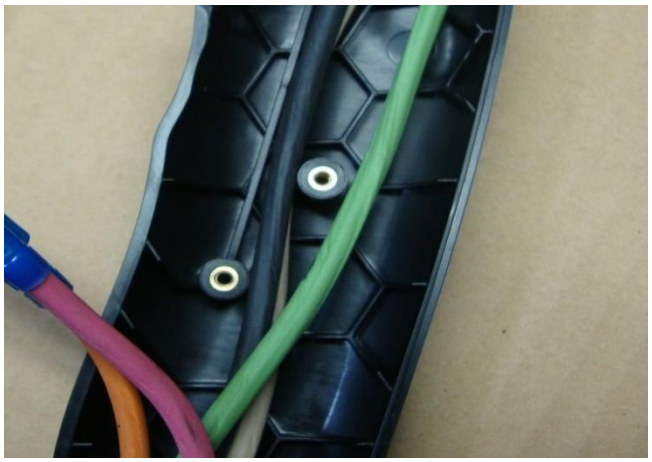

Fig. 6-5 Wire Routing

Fig. 6-6 Terminal Block Wiring

©2018 by Crafco, Inc. All Rights Reserved

Fig. 6-7 Actuator Spring Location

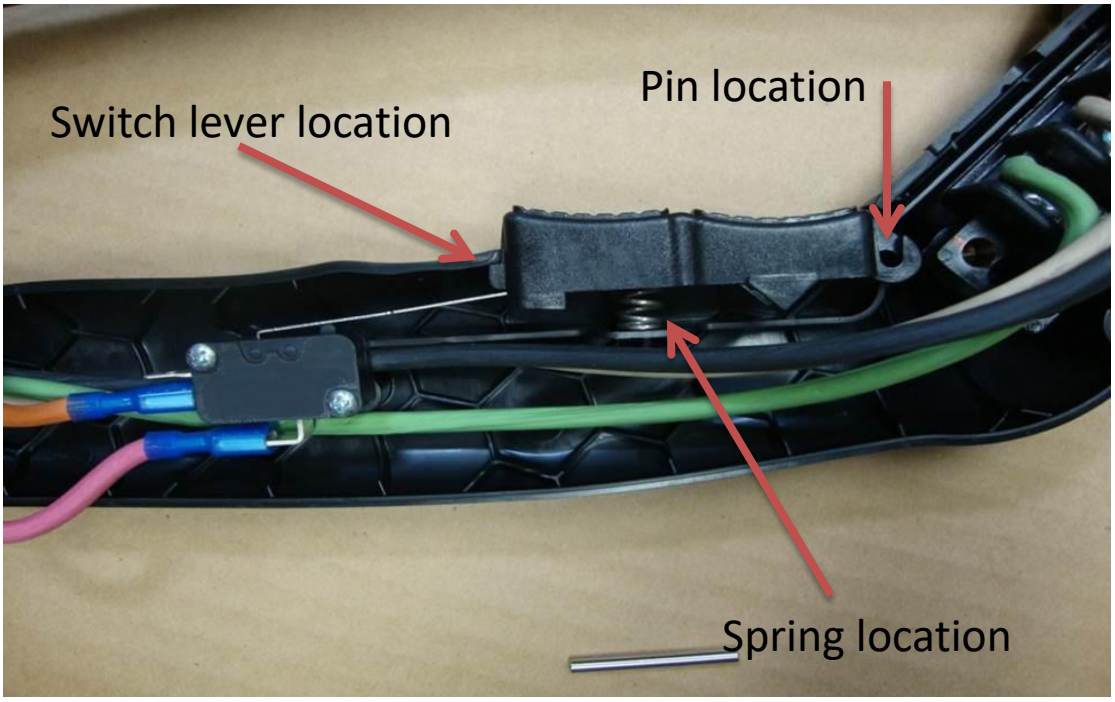

Fig. 6-8 Actuator / Trigger Assembly

6.24 Burner Fuel Filter Replacement

On machines that have a separate fuel filter for the burner, follow the steps below to replace the fuel filter.

Table 6-8 Burner Fuel Filter Replacement

Step	Action
1	The machine should be off, and cooled to ambient temperature.
2	Place a drain pan below the burner fuel filter assembly.
3	Close the ball valve that is located inline before the burner fuel filter assembly.
4	Unscrew the filter from the assembly using an oil filter or strap style wrench.
5	Screw the new filter into place, and tighten by hand.
6	Open the ball valve to allow fuel to flow.
7	Turn on the power key, and turn on the main power switch. The burner should self-prime and start. It may take a couple cycles to fill the new fuel filter and bleed the fuel system.
8	Once the burner is running, check for any fuel leaks and tighten the filter if needed.
9	Turn off the main power switch and power key.

©2018 by Crafco, Inc. All Rights Reserved

Chapter 7 How to Use a Multimeter

7.0 How to Use a Multimeter

Melters use 12-volt direct current (DC) to power the burner, hydraulic valves, and trigger on electric wand. The DC power is from a 12-volt battery.
The electric hose and wand uses 24-volt 3-phase alternating current (AC). The AC power is from the generator which hangs under the radiator. This system has no reference to ground so there is no possibility of electrical shock unless you are between 2 of the phases. NOTE: ONLY CHECK AMPERAGE ON A HOSE WITH A CLAMP-ON AMP METER.

12-volt DC power has little danger of electrical shock. Care must still be taken when dealing with DC power systems because it is capable of producing large amounts of current.

7.1 Checking DC Voltage with a Multimeter

Connect the probes to the meter.
Set the range to a position that includes 12-volts or higher.
Touch the red probe to the positive side of accessory and black probe to ground. If the item you are checking has a ground wire attached then use that ground or you can use a non-painted surface on the frame.

7.2 Checking AC Voltage with Multimeter

Connect the probes to the meter (See Fig. 7-1 Standard Multimeter).
Set range to a position that includes 24-volts or higher.
There are three steps to test the generator voltage. All 3 values should be in the range of 24-30 volts AC.

- Touch red probe to the white wire of the generator and the black probe to the green wire of the generator.
- Next move black probe to black wire.
- Then move red probe to green wire.

7.3 Checking Resistance (Ohms)

Connect probes to the meter (See Fig. 7-1 Standard Multimeter).
Note: When checking Ohms the circuit cannot be completed. This means one end of the wire will need to be disconnected.

7.3.1 How to Check Wire Continuity

Set the meter to “Audible Continuity”.
Now touch the probe to each end of the wire in question. The meter will read “0” on the screen and make an audible beep if the wire has continuity from end to end.

7.3.2 How to Check RTD Sensor

Set dial to Ohms Ω. If your meter has different ranges set to 2K or 2000 ohm range.
Touch one probe to each screw or wire of the sensor. The meter will read X.XX if in the 2K range or XXX.X if in the 2000 range.

©2018 by Crafco, Inc. All Rights Reserved

Chapter 7 How to Use a Multimeter

7.4 Checking Amperage

The Multimeter can be used to check amperages under 10 amps in AC or DC current.
When checking the amperage of the electric hose **always use a clamp-on amp meter** (See Fig. 7-2 Clamp – On Amp Meter/Multimeter). The amperage in the hose can reach as high as 35 amps. Clamp the meter around one wire at a time. Remember most clamp-on meters do not work on DC current.

Fig. 7-1 Standard Multimeter

Chapter 7 How to Use a Multimeter

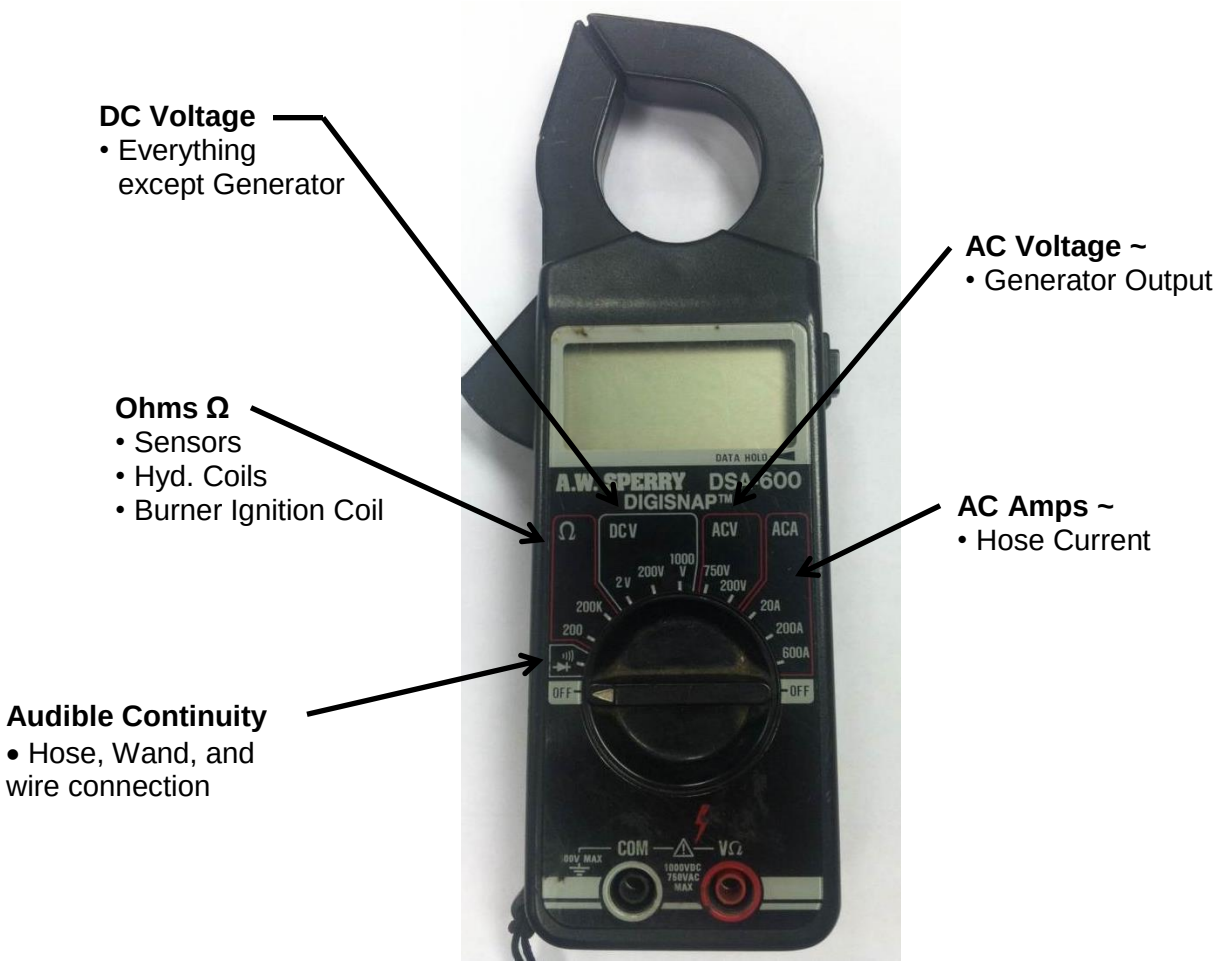

Fig. 7-2 Clamp – On Amp Meter/Multimeter

Chapter 8 Troubleshooting

8.0 Burner Troubleshooting

8.0.1. Symptoms: Burner will Not Ignite

Table 8-1 Basic Visual Burner Troubleshooting

Step	Possible Cause	If . . .
1	Is the engine running? **NOTE**: You can troubleshoot the burner without the engine running, but you must connect a battery charger to the battery and the key switch must be in the "ON" position.	• Yes, go to Step 2. • No, start the engine or connect to a battery charger.
2	Is the "BURNER" toggle switch in the "ON" position?	• Yes, go to Step 3. If this is a compressor the go to Step 2a. • No, turn the toggle switch to the "ON" position.
2a	Is the Main Power switch "ON"? **NOTE:** This step relates to compressor units only.	• Yes, go to Step 3. • No, turn "ON" the "Main Power" switch.
3	Is the red "Burner" light "ON"?	• Yes, go to Step 6. • No, go to Table 8-3 Burner Electrical Troubleshooting -4LE2 Engine Step 4.
4	Is the "BURNER LOCKOUT" Alarm sounding?	• Yes, hold "BURNER RESET" switch down for 5 seconds. • No go to Step 5.
5	Are both the Material and Hot Oil temperature dials set above the current temperatures?	• Yes, go to Step 6. • No, set the Material temperature according to the type of material you are using and the Hot Oil 100°F above the Material set point.
6	Does either readout display a -1? **NOTE:** This occurs only when there is a short in the sensor circuit.	• Yes, this indicates a short in the circuit. Check the RTD sensor for water causing a short under the cap. Also look for worn wires possibly shorting to frame between sensor and control box. • No, go to step 6a.
6a	Does either readout display a 1? **NOTE:** This occurs only when the sensor circuit is not completed.	• Yes, this indicates a break in one or both of the sensor wires between the RTD sensor and the PAKSTAT. Check for broken wires between senor and PAKSTAT. • No, go to Step 7.
7	Is the circuit breaker tripped?	• Yes, reset by pushing in the button that popped out. • No go to Step 8.

©2018 by Crafco, Inc. All Rights Reserved

Table 8-2 Basic Visual Burner Troubleshooting (continued)

Step	Possible Cause	If . . .
8	Is the fuel level low or empty?	• Yes, fill with #2 diesel fuel. Then bleed the burner, see Table 8-18 Bleeding the Burner • No, go to Step 9.
9	Is there smoke coming out of the exhaust stack?	• Yes, go to Table 8-13 Smoke Coming Out of Exhaust Stack. • No, go to Step 10.
10	Is your burner working properly, but it seems to take a while to reach operating temperature?	• Yes, go to Table 8-19 Sealant is Heating Slowly. • No, Call Crafco, Inc. and speak to a customer service technician.

Note: Use Fig. 8-2 Diesel Burner Schematic while troubleshooting the burner electrical system for 4LE2 Engine units.

Table 8-3 Burner Electrical Troubleshooting -4LE2 Engine

Step	Possible Cause	If . . .
1	Is there 12Vdc between the yellow and black wires at the burner plug?	• Yes, go to Step 4. • No, go to Step 1a.
1a	Is there 12Vdc between the yellow wire on the burner relay in the control box and the black wire on the relay?	• Yes, check for poor connection or broken wire between the burner relay in the control box and the plug on the burner. • No, go to Step 1b.
1b	Is there 12Vdc between the WHT/RED wire on the burner relay in the control box and the black wire on the relay?	• Yes, go to Step 1c. • No, check for poor connection or broken wire between the burner relay in the control box and the burner reset switch.
2	Is there 12Vdc between the circuit breaker (red wire going to frame solenoid) located under the battery and the ground lug on the battery tray?	• Yes, check for loose or broken wires between circuit breaker and frame solenoid. • No, go to Step 2a.
2a	Is there 12Vdc between the circuit breaker (red wire going to battery positive cable) and the ground lug on the battery tray?	• Yes, wait 15 seconds then repeat step 2. • If still no voltage then replace circuit breaker. • No, go to step 2b.
2b	Check for loose or broken wires between circuit breaker and battery positive cable.	• Yes, replace or repair damaged wire and repeat Step 3. • No, go to step 3.

©2018 by Crafco, Inc. All Rights Reserved

Table 8-4 Burner Electrical Troubleshooting – 4LE2 Engine (continued)

Step	Possible Cause	If . . .
3	Is there 12Vdc between the positive and negative battery post? If this check is done while the engine is running the reading should be 13.8 volts.	• Yes, then there should be 12Vdc on the battery side of the circuit breaker. • No, replace battery. • **NOTE**: If the reading is less than 13.8 volts while the engine is running the alternator needs to be rebuilt or replaced.
4	Find insulated quick connect between green wire and white wire that goes to burner plug. Is there 12Vdc between the green wire and a nearby ground source (black wire)?	• Yes, go to Table 8-15 Testing the DC controller. • No, go to step 4a.
4a	Is there 12Vdc between green wire labeled “GRN-BRNR” on upper terminal blocks and nearby ground source (black wire)?	• Yes, check for loose or broken wires between burner plug and terminal block. • No, go to Step 5.
5	Is there 12Vdc between gray wire labeled “GRY-2” and nearby ground source?	• Yes, replace terminal block. • No, go to Step 5a.
5a	Is there 12Vdc between terminal #7 gray wire and terminal #5 black wire of the hot oil PAKSTAT?	• Yes, check for loose or broken wires between terminal block and terminal #7 of the hot oil PAKSTAT. • No, go to Step 5b.
5b	Is there 12Vdc between terminal #6 gray wire and terminal #5 black wire of hot oil PAKSTAT?	• Yes, replace hot oil PAKSTAT. • No, go to Step 6.
6	Is there 12Vdc between gray wire labeled “GRY-3” on upper terminal blocks and a nearby ground source (black wire)?	• Yes, check for loose or broken wires between terminal block and terminal #6 of the hot oil PAKSTAT. • No, go to Step 6a.
6a	Is there 12Vdc between gray wire labeled “GRY-1” on upper terminal blocks and a nearby ground source (black wire)?	• Yes, replace terminal block. • No, go to Step 7.
7	Is there 12Vdc between terminal #4 gray wire and terminal #8 black wire of the material PAKSTAT?	• Yes, check for loose or broken wires between terminal block and terminal #4 of the material PAKSTAT. • No, go to Step 7a.

©2018 by Crafco, Inc. All Rights Reserved

Chapter 8 Troubleshooting

If you are working on a 4EL2 Engine unit go to Table 8-7 Electrical Troubleshooting – 4LE2 Engine (continued) Engine now.

Table 8-5 Burner Electrical Troubleshooting - 4LE2 Engine (continued)

Step	Possible Cause	If . . .
7a	Is there 12Vdc between terminal #3 orange wire and terminal #8 black wire of the material PAKSTAT?	• Yes, replace PAKSTAT. • No, go to step 7b.
7b	Is there 12Vdc between terminal #1 orange wire and terminal #8 black wire of the material PAKSTAT?	• Yes, check for loose or broken wires between terminal #1 and #3 of material PAKSTAT. • No, go to Step 7c.
7c	Is there 12Vdc between terminal #9 orange wire and terminal #8 black wire of the material PAKSTAT?	• Yes, check for loose or broken wires between terminal #9 and #1 of material PAKSTAT. • No, go to Step 8.
8	Is there 12Vdc between orange wire labeled “ORN-1” on upper terminal blocks and a nearby ground source (black wire)?	• Yes, check for loose or broken wires between terminal #9 of the material PAKSTAT and terminal block. • No, go to Step 8a.
8a	Is there 12Vdc between orange wire labeled “ORN-2” on upper terminal blocks and a nearby ground source (black wire)?	• Yes, replace terminal block. • No, go to Step 9.
9	Is there 12Vdc between terminal #3 orange wire and terminal #5 black wire on hot oil PAKSTAT?	• Yes, check for loose or broken wires between terminal #3 of the hot oil PAKSTAT and terminal block. • No, go to Step10.
10	Is there 12Vdc between top terminal (orange wire) of power switch and nearby ground source (black wire)? On a compressor unit it would be the bottom terminal of burner switch.	• Yes, check for loose or broken wires between top terminal burner switch and terminal #3 of the hot oil PAKSTAT. • No, go to Step 11.
11	Is there 12Vdc between bottom terminal (red wire) of power switch and nearby ground source (black wire)? Compressor unit it would be the top terminal of burner switch.	• Yes, replace switch. • No, go to Step 12.
12	Is there 12Vdc between top terminal of circuit breaker (red wire) and nearby ground source (black wire)?	• Yes, check for loose or broken wires between top terminal of circuit breaker and bottom terminal (red wire) of power switch. • No, go to Step 12b.

©2018 by Crafco, Inc. All Rights Reserved

Table 8-6 Burner Electrical Troubleshooting – 4LE2 (continued)

Step	Possible Cause	If . . .
12b	Is there 12Vdc between bottom terminal of circuit breaker (red wire) and nearby ground source (black wire)?	• Yes, replace circuit breaker. • No, go to Step 13.
13	Is there 12Vdc between “ACC” (red wire) of ignition switch and nearby ground source (black wire)?	• Yes, check for loose or broken wires between “ACC” of ignition switch and bottom terminal of circuit breaker. • No, go to Step 13a.
13a	Is there 12Vdc between “B” (blue wire) of ignition switch and nearby ground source (black wire)?	• Yes, replace ignition switch. • No, go to Step 14.
14	Is there 12Vdc between blue wire on starter solenoid and nearby ground source (black wire or bare metal on engine case)?	• Yes, check for loose or broken wire between starter solenoid and ignition switch. • No, go to step 14a.
14a	Check connections and condition of red battery cable?	• Yes, there should be 12Vdc at all previous steps. • No, replace battery cable.

©2018 by Crafco, Inc. All Rights Reserved

Chapter 8 Troubleshooting

NOTE: This portion of the troubleshooting is for the compressor units only.

Table 8-7 Electrical Troubleshooting – 4LE2 Engine (continued)

Step	Possible Cause	If . . .
7a	Is there 12Vdc between terminal #3 orange wire and terminal #8 black wire of the material PAKSTAT?	• Yes, replace PAKSTAT. • No, go to step 7b.
7b	Is there 12Vdc between terminal #1 orange wire and terminal #8 black wire of the material PAKSTAT?	• Yes, check for loose or broken wires between terminal #1 and #3 of material PAKSTAT. • No, go to Step 7c.
7c	Is there 12Vdc between terminal #9 orange wire and terminal #8 black wire of the material PAKSTAT?	• Yes, check for loose or broken wires between terminal #9 and #1 of material PAKSTAT. • No, go to Step 8.
8	Is there 12Vdc between orange wire labeled “ORN-1” on upper terminal blocks and a nearby ground source (black wire)?	• Yes, check for loose or broken wires between terminal #9 of the material PAKSTAT and terminal block. • No, go to Step 8a.
8a	Is there 12Vdc between orange wire labeled “ORN-2” on upper terminal blocks and a nearby ground source (black wire)?	• Yes, replace terminal block. • No, go to Step 9.
9	Is there 12Vdc between terminal #3 orange wire and terminal #5 black wire on hot oil PAKSTAT?	• Yes, check for loose or broken wires between terminal #3 of the hot oil PAKSTAT and terminal block. • No, go to Step10.
10	Is there 12Vdc between bottom terminal (orange wire) of burner switch and nearby ground source (black wire)?	• Yes, check for loose or broken wires between top terminal power switch and terminal #3 of the hot oil PAKSTAT. • No, go to Step 11.
11	Is there 12Vdc between top terminal (red wire) of burner switch and nearby ground source (black wire)?	• Yes, replace switch. • No, go to Step 12.
12	Is there 12Vdc between top terminal of the main power switch (red wire) and nearby ground source (black wire)?	• Yes, check for loose or broken wires between top terminal of main power switch and top terminal (red wire) of burner switch. • No, go to Step 12a.

©2018 by Crafco, Inc. All Rights Reserved

Table 8-8 Burner Electrical Troubleshooting – 4LE2 Engine (continued)

Step	Possible Cause	If . . .
12a	Is there 12Vdc between bottom terminal of the main power switch (red wire) and nearby ground source (black wire)?	• Yes, replace NO contact block. • No, go to Step 12b.
12b	Is there 12Vdc between top terminal of circuit breaker (red wire) and nearby ground source (black wire)?	• Yes, check for loose or broken wires between top terminal of circuit breaker and bottom terminal (red wire) of main power switch. • No, go to Step 12c.
12c	Is there 12Vdc between bottom terminal of circuit breaker (red wire) and nearby ground source (black wire)?	• Yes, replace circuit breaker. • No, go to Step 13.
13	Is there 12Vdc between white wire next to 15A fuse in the ECM panel and nearby ground source (black wire)?	• Yes, check for loose or broken wires between ECM and bottom terminal of circuit breaker. • No, go to Step 13a.
13a	Is the 15A fuse blown in the ECM?	• Yes, replace fuse. • No, call Crafco, Inc. and speak to a customer service technician, you should have been able to find the problem.

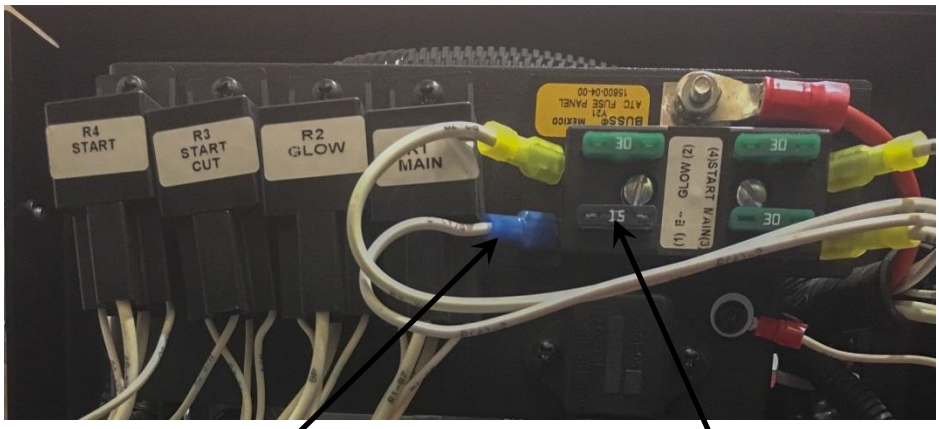

Fig. 8-1 ECM

Step 13

Step 13a

Chapter 8 Troubleshooting

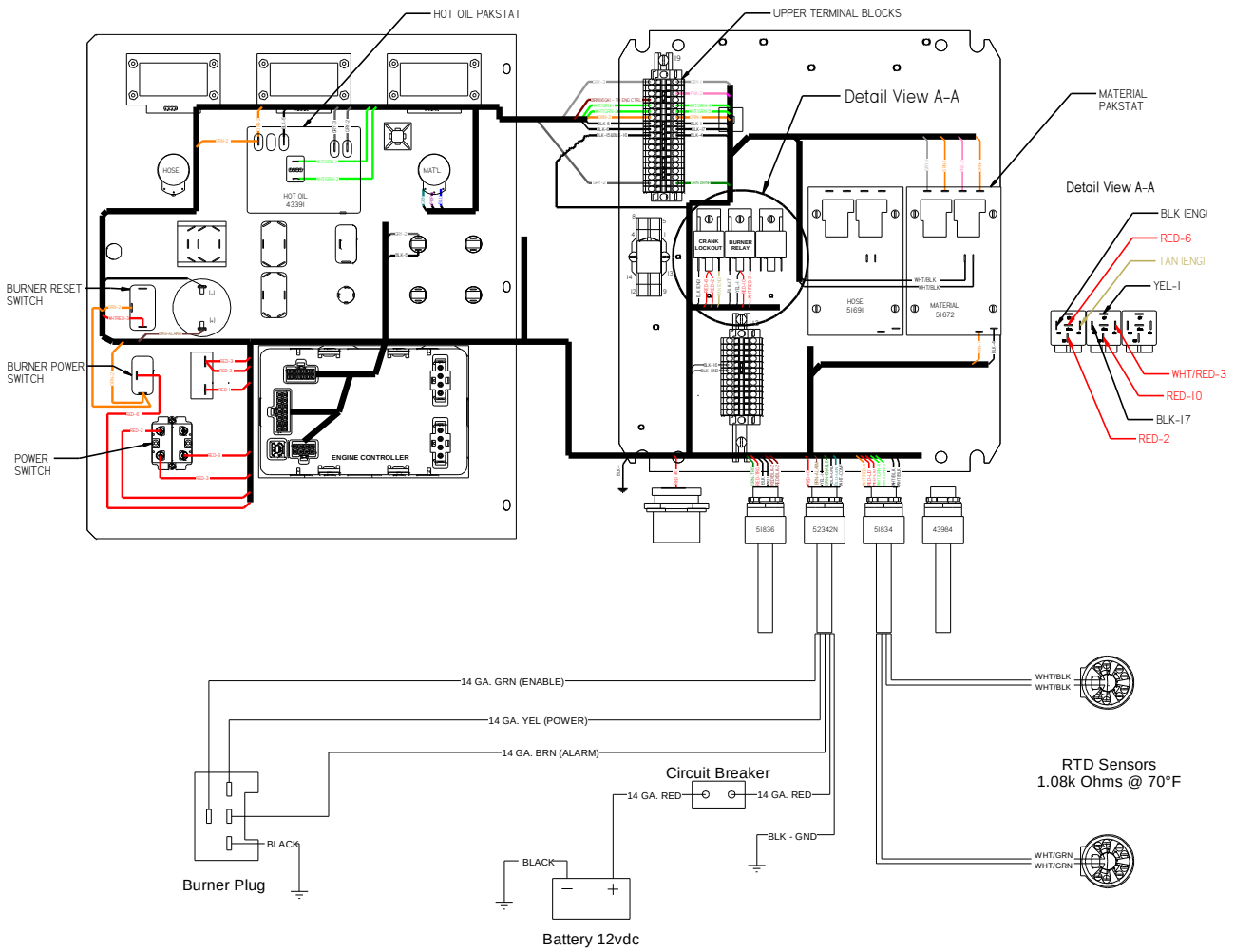

Fig. 8-2 Diesel Burner Schematic – 4LE2 Engine

Table 8-9 Burner Electrical Troubleshooting – 3C Engine

Step	Possible Cause	If . . .
1	Is there 12Vdc between the 2 center terminals of the frame solenoid?	• Yes, go to 1a. • No, check for poor connection or broken wire between frame solenoid and engine oil pressure switch white/red wire.
1a	Is there 12Vdc between the large terminal (red wire going to burner plug) of the frame solenoid and the black wire in the burner plug?	• Yes, go to Step 4. • No, go to Step 1b.
1b	Is there 12Vdc between the other large terminal (red wire going to the circuit breaker) of the frame solenoid and the ground wire attached to the mounting bolt?	• Yes, replace frame solenoid. • No, go to step 2.
2	Is there 12Vdc between the circuit breaker (red wire going to frame solenoid) located under the battery and the ground lug on the battery tray?	• Yes, check for loose or broken wires between circuit breaker and frame solenoid. • No, go to Step 2a.
2a	Is there 12Vdc between the circuit breaker (red wire going to battery positive cable) and the ground lug on the battery tray?	• Yes, wait 15 seconds then repeat step 2. • If still no voltage then replace circuit breaker. • No, go to step 2b.
2b	Check for loose or broken wires between circuit breaker and battery positive cable.	• Yes, replace or repair damaged wire and repeat Step 3. • No, go to step 3.

©2018 by Crafco, Inc. All Rights Reserved

Table 8-10 Burner Electrical Troubleshooting – 3C Engine (continued)

Step	Possible Cause	If . . .
3	Is there 12Vdc between the positive and negative battery post? If this check is done while the engine is running the reading should be 13.8 volts.	• Yes, then there should be 12Vdc on the battery side of the circuit breaker. • No, replace battery. • **Note**: If the reading is less than 13.8 volts while the engine is running the alternator needs to be rebuilt or replaced.
4	Find insulated quick connect between green wire and white wire that goes to burner plug. Is there 12Vdc between the green wire and a nearby ground source (black wire)?	• Yes, go to **Error! Unknown switch argument.** • No, go to step 4a.
4a	Is there 12Vdc between green wire labeled “GRN-BRNR” on terminal block lower right hand corner and nearby ground source (black wire).	• Yes, check for loose or broken wires between burner plug and terminal block. • No, go to Step 5.
5	Is there 12Vdc between gray wire labeled “GRY-2” on terminal block lower right hand corner and nearby ground source?	• Yes, replace terminal block. • No, go to Step 5a.
5a	Is there 12Vdc between terminal #7 gray wire and terminal #5 black wire of the hot oil PAKSTAT?	• Yes, check for loose or broken wires between terminal block and terminal #7 of the hot oil PAKSTAT. • No, go to Step 5b.
5b	Is there 12Vdc between terminal #6 gray wire and terminal #5 black wire of hot oil PAKSTAT?	• Yes, replace hot oil PAKSTAT. • No, go to Step 6.
6	Is there 12Vdc between gray wire labeled “GRY-3” on terminal block upper left hand corner and a nearby ground source (black wire)?	• Yes, check for loose or broken wires between terminal block and terminal #6 of the hot oil PAKSTAT. • No, go to Step 6a.
6a	Is there 12Vdc between gray wire labeled “GRY-1” on terminal block upper right hand corner and a nearby ground source (black wire)?	• Yes, replace terminal block. • No, go to Step 7.
7	Is there 12Vdc between terminal #4 gray wire and terminal #8 black wire of the material PAKSTAT?	• Yes, check for loose or broken wires between terminal block and terminal #4 of the material PAKSTAT. • No, go to Step 7a.

©2018 by Crafco, Inc. All Rights Reserved

Table 8-11 Burner Electrical Troubleshooting – 3C Engine (continued)

Step	Possible Cause	If . . .
7a	Is there 12Vdc between terminal #3 orange wire and terminal #8 black wire of the material PAKSTAT?	• Yes, replace PAKSTAT. • No, go to step 7b.
7b	Is there 12Vdc between terminal #1 orange wire and terminal #8 black wire of the material PAKSTAT?	• Yes, check for loose or broken wires between terminal #1 and #3 of material PAKSTAT. • No, go to Step 7c.
7c	Is there 12Vdc between terminal #9 orange wire and terminal #8 black wire of the material PAKSTAT?	• Yes, check for loose or broken wires between terminal #9 and #1 of material PAKSTAT. • No, go to Step 8.
8	Is there 12Vdc between orange wire labeled “ORN-1” on the terminal block right side middle and a nearby ground source (black wire)?	• Yes, check for loose or broken wires between terminal #9 of the material PAKSTAT and terminal block. • No, go to Step 8a.
8a	Is there 12Vdc between orange wire labeled “ORN-2” on the terminal block left side middle and a nearby ground source (black wire)?	• Yes, replace terminal block. • No, go to Step 9.
9	Is there 12Vdc between terminal #3 orange wire and terminal #5 black wire on hot oil PAKSTAT?	• Yes, check for loose or broken wires between terminal #3 of the hot oil PAKSTAT and terminal block. • No, go to Step10.
10	Is there 12Vdc between top terminal (orange wire) of power switch and nearby ground source (black wire)?	• Yes, check for loose or broken wires between top terminal power switch and terminal #3 of the hot oil PAKSTAT. • No, go to Step 11.
11	Is there 12Vdc between bottom terminal (red wire) of power switch and nearby ground source (black wire)?	• Yes, replace switch. • No, go to Step 12.
12	Is there 12Vdc between top terminal of circuit breaker (red wire) and nearby ground source (black wire)?	• Yes, check for loose or broken wires between top terminal of circuit breaker and bottom terminal (red wire) of power switch. • No, go to Step 12a.

©2018 by Crafco, Inc. All Rights Reserved

Table 8-12 Burner Electrical Troubleshooting – 3C Engine (continued)

Step	Possible Cause	If . . .
12a	Is there 12Vdc between bottom terminal of circuit breaker (red wire) and nearby ground source (black wire)?	• Yes, replace circuit breaker. • No, go to Step 13.
13	Is there 12Vdc between “ACC” (red wire) of ignition switch and nearby ground source (black wire)?	• Yes, check for loose or broken wires between “ACC” of ignition switch and bottom terminal of circuit breaker. • No, go to Step 13a.
13a	Is there 12Vdc between “B” (blue wire) of ignition switch and nearby ground source (black wire)?	• Yes, replace ignition switch. • No, go to Step 14.
14	Is there 12Vdc between blue wire on starter solenoid and nearby ground source (black wire or bare metal on engine case)?	• Yes, check for loose or broken wire between starter solenoid and ignition switch. • No, go to step 14a.
14a	Check connections and condition of red battery cable.	• Yes, there should be 12Vdc at all previous steps. • No, replace battery cable.

©2018 by Crafco, Inc. All Rights Reserved

Chapter 8 Troubleshooting

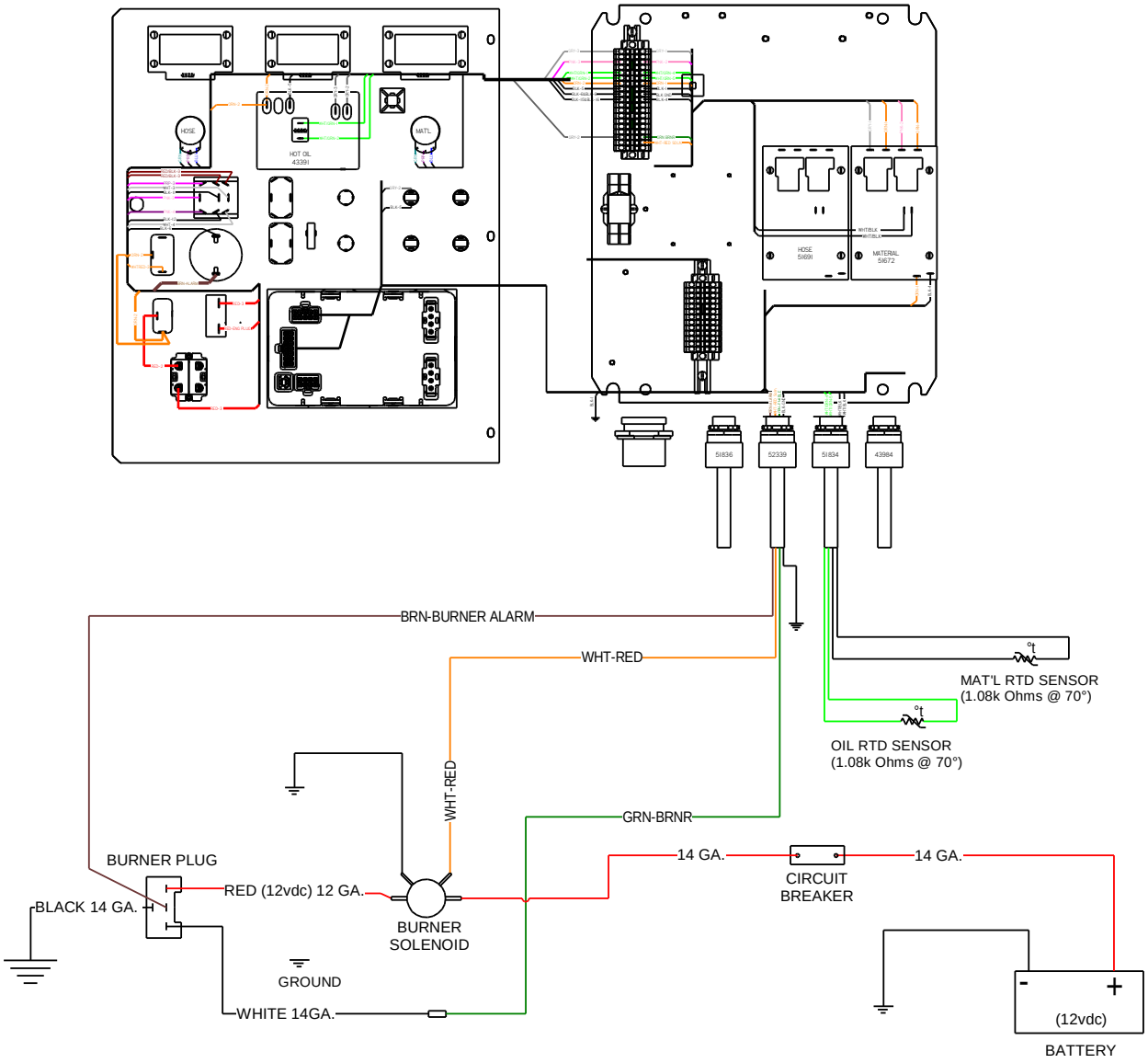

Fig. 8-3 Diesel Burner Schematic – 3C Engine

8.0.2. Excessive Smoke Coming Out of Exhaust Stack

Table 8-13 Smoke Coming Out of Exhaust Stack

Step	Smoke Coming Out of the Exhaust Stack
1	White smoke indicates that there is too much air being forced though the burner. Loosen the Air Shutter screw and rotate the Air Shutter counter clockwise to reduce air. Refer to Fig. 8-5 Diesel Burner Air Settings, for the proper air settings and diagram.
2	Black smoke indicates that there is not enough air being forced through the burner. First check the air settings, if more air is required rotate Air Shutter clockwise. Refer to Fig. 8-5 Diesel Burner Air Settings.
3	Refer to Fig. 8-5 Diesel Burner Air Settings to locate the following components. Using a 7/16" wrench, remove the copper fuel line nut attached to the nozzle line. Next remove the locking nut for the nozzle tube. Then loosen the locking tabs on the ignition coil and open the ignition coil. Remove the nozzle line assembly.
4	Using Fig. 8-4 Diesel Burner Electrode Adjustment, make sure the electrodes are in the correct position. Loosen the clamp holding the electrodes in place so they can be adjusted. Inspect the porcelain ceramic insulator for any cracks. Also check the tip of each of the electrodes to make sure they still have a sharp point and are not rounded off.
5	If it has been longer than 500 hours since the last time the burner nozzle was replaced, Crafco recommends replacing the burner nozzle at this time.
6	Reassemble the burner, using the reverse order in Step 3.
7	Remove the burner box assembly by removing the four (4) 1/2" bolts, flat washer, lock washer, and nuts holding the burner box onto the trailer.
7a	Make sure the insulation inside the burner box is not soaked with diesel fuel.
7b	If the insulation is soaked with diesel fuel, you will need to replace the insulation.
7c	Reassemble the burner box.

8.0.3. Burner Lights but Shuts Down After 15 Seconds

Table 8-14 Burner Lights but Shuts Down After 15 Seconds

Step	Possible Cause	If . . .
1	Does the CAD EYE have soot or dirt on the lens?	• Yes, clean cad eye lens with a soft cloth. • No, go to Step 2.
2	Are the two yellow wires for the CAD EYE loose or broken?	• Yes, repair or replace as needed. • No, go to Step 3.
3	Is the CAD EYE faulty?	• Yes, replace CAD EYE. • No, call a Crafco Inc. service technician.

©2018 by Crafco, Inc. All Rights Reserved

8.0.4. Testing the DC Controller

Table 8-15 Testing the DC controller

Step	Bench Test DC Controller
1	Remove all wire nuts attaching the DC Controller to the burner.
2	Attach the black ground wire to the negative battery post.
3	Attach the red wire to the positive battery post.
4	Attach the white (Enable) wire to the positive battery post to start the test. (Genesis II Controllers will have a 15-second delay.) • Orange (Blower Motor) wire should have 12Vdc (all the time). • Blue (Igniter) wire should have 12Vdc.
5	Twist the yellow wires together (once voltage registers) on the orange, blue and purple wires. • Orange (Blower Motor) wire should maintain 12Vdc. • Blue (Igniter) wire should lose voltage after 15 seconds. • Purple (Valve) wire should maintain 12Vdc.
6	If any of the above tests fail, replace the DC Controller.

8.0.5. Burner Fuel solenoid Testing

Table 8-16 Burner Fuel Solenoid Testing

Step	Fuel Solenoid Test
1	Remove cord set from fuel solenoid.
2	Check the ohms between the terminals of fuel solenoid.
3	If the reading is between 15-25 ohms the coil is good.
4	If the reading is outside the above range or the meter indicates an open circuit, replace the fuel solenoid.

©2018 by Crafco, Inc. All Rights Reserved

8.0.6. Burner Ignition Coil Testing

Table 8-17 Burner Ignition Coil Test

Step	Ignition Coil Test
1	Make sure the burner is off. Open the ignition transformer (located above the blower) to expose the springs.
2	Check resistance between each of the springs and the ground (exposed metal on the burner).
3	The meter should read less than 2000 ohms. (Take note of the readings, you will use them in Step 5.)
4	Check resistance between both springs. (Take note of the reading, you will use it in Step 5.)
5	The igniter should be replaced if: • The difference between the two springs to ground resistance readings is greater than 20%. • Or the spring-to-spring resistance does not read approximately twice the spring to ground.

8.0.7. Bleeding the Burner

Table 8-18 Bleeding the Burner – Non-Compressor Only

Step	Bleeding the Diesel Burner
1	Place an oil pan under the machine in front of the burner.
2	Using a 3/8" wrench, loosen the bleeder valve on the fuel pump refer to Fig. 8-5 Diesel Burner Air Settings for bleeder location. See note below if compressor unit.
3	Turn the ignition key to the "ON" position, then turn the power toggle switch to the “ON” position. Fuel should flow out of the bleeder valve. You want the fuel to be clear from any air bubbles; this may require you to turn the ignition key "OFF" and "ON" a couple of times.
4	Allow burner to bleed itself until the fuel is clear of any bubbles.
5	Tighten the bleeder valve.
6	Turn off the power toggle switch and ignition key.

NOTE: The compressor units have been plumbed to have the burner be self-priming. Ensure the “Main Power” and “Burner” switch is “ON” and burner fuel pump will start circulating fuel through the fuel lines, which removes all air bubbles automatically, since it has a return line to the fuel tank.

©2018 by Crafco, Inc. All Rights Reserved

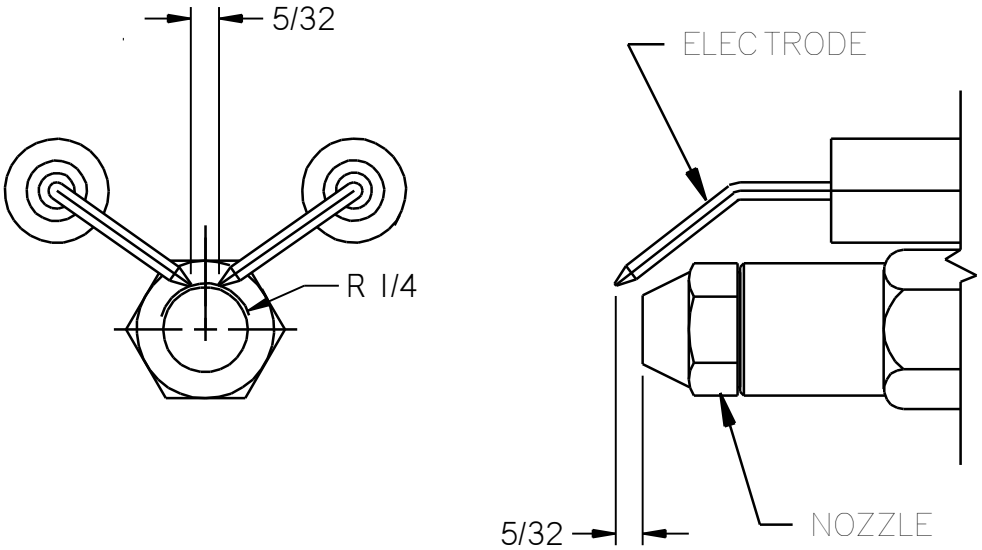

Fig. 8-4 Diesel Burner Electrode Adjustment

Air Shutter = 8
Air Band = 0
Fuel Pressure = 140 PSI
Adjustment Plate = 3

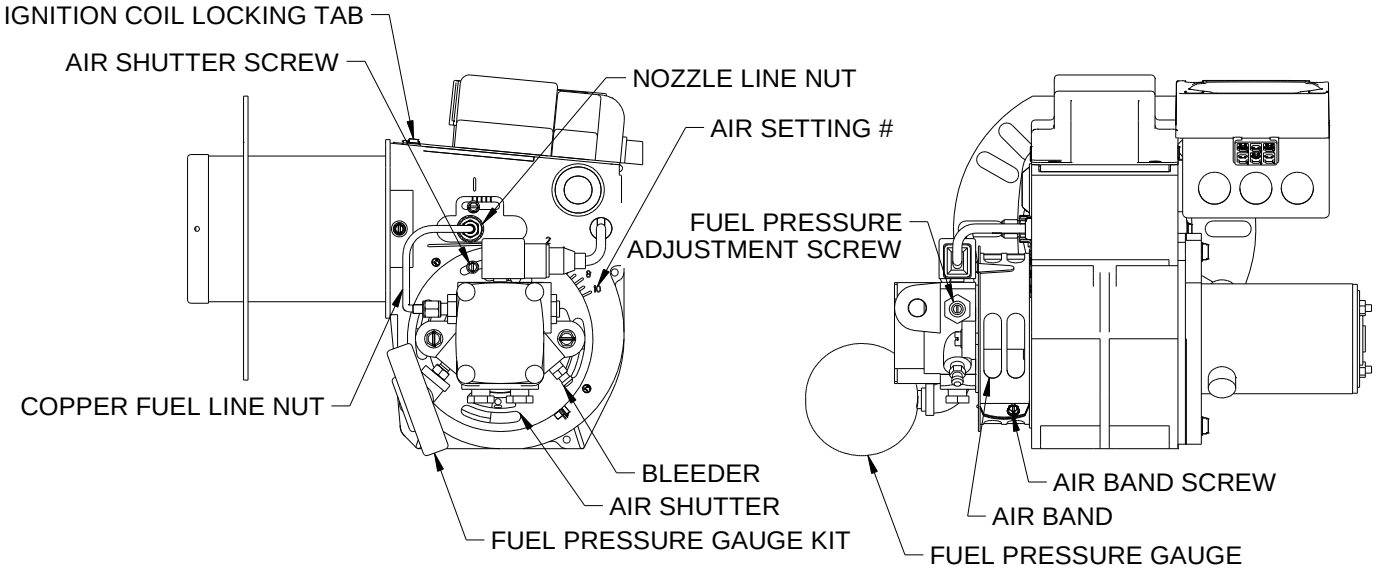

Fig. 8-5 Diesel Burner Air Settings

Chapter 8 Troubleshooting

8.1 Sealant Heating Slowly

Table 8-19 Sealant is Heating Slowly

Step	Sealant is Heating Slowly
1	With the material level half or less, open the loading lid and inspect the inside edge of the material tank. Check if there is a buildup of old, dried out and hardened material along the top half of the material tank.
2	If this is the case you will need to drain out (use up) the rest of the material inside the tank. When the tank is empty, use an air chisel to remove this built up material. Remove as much as possible all around the tank including the roof of the material tank. Remove all the old sealant chunks from the bottom of the material tank. This should be done every year or as conditions require.
3	Check your level of the heat transfer oil, there are 3 marks on the dipstick is for 0°, 70°F, 150°. These temperatures represent the temperature of the heat transfer oil at the time it is being checked. See Table 5-1 Preparing the Machine for Start Up
4	Check your records of the last service replacement of the heat transfer oil. If it has been longer than 500 hours, or one year, you need to change your oil.
5	Many of Crafco, Inc. service centers can perform these service steps for you if you cannot. Call your local service center to find out if they can.

©2018 by Crafco, Inc. All Rights Reserved

8.2 Agitator Troubleshooting

8.2.1 Symptom: Mixer Does Not Rotate

Table 8-20 Basic Visual Mixer Troubleshooting

Step	Possible Cause	If . . .
1	Is the Material Temperature Display at or above 275°F?	• Yes, go to Step 2. • No, continue to allow the machine to heat. (Make sure the Material dial and the Hot Oil dial are set at operating temperatures.)
2	Is the red "Mixer" light "ON"?	• Yes, go to Step 4. No, go to Table 8-21 Mixer Electrical Troubleshooting
3	Is the loading door closed?	• Yes, go to Step 4. • No, shut the loading door.
4	Is the "Mixer" toggle switch in the "Forward" position?	• Yes, go to Step 5. • No, move the toggle switch to the forward position.
5	Move the "Mixer" toggle switch to the “Reverse” position. Is the agitator moving?	• Yes, allow mixer to reverse for 15 seconds and then move the "Mixer" toggle switch to the "Forward" position. Go to Step 6. No, go to Table 8-21 Mixer Electrical Troubleshooting
6	Open the Material loading door. Are there several unmelted blocks in the tank?	• Yes, this may cause the agitator to jam. Use the mixer toggle switch to move the agitator forward and backward until the material melts enough to allow forward movement without jamming. Crafco, Inc. recommends you add one to two blocks every three to four minutes during dispensing of product. •No, go to Table 8-21 Mixer Electrical Troubleshooting
7	Is the hydraulic fluid level near the center of the sight gauge? Check at ambient temperature. See Fig. 5-1 Hydraulic Fluid Level	• Yes, go to Table 8-21 Mixer Electrical Troubleshooting • No, fill oil to the center of the sight gauge.

Chapter 8 Troubleshooting

Note: Use Fig. 8-7 Mixer Circuit while troubleshooting the mixer electrical system.

Table 8-21 Mixer Electrical Troubleshooting

Step	Possible Cause	If . . .
1	Is the amber light "ON" on the Din Plug when the "Mixer" toggle switch is in the "Forward" position? (For forward din plug location. Refer to Fig. 8-9 Din Plug Layout).	• Yes, then the mixer should be working. If it is not working see Table 8-24 Mixer Hydraulic Troubleshooting • No, go to step 1a.
1a	Unscrew the din plug center screw so you can pull the din plug up about 1/4" in order to check for voltage. Is there 12Vdc from side post to side post?	• Yes, the electrical system for the agitator is working properly, go to Table 8-24 Mixer Hydraulic Troubleshooting. Also replace din plug at earliest convenience to retain visual troubleshooting ability. • No, go to step 2.
2	Is there 12Vdc between the "Mixer" toggle switch bottom post brown wire and nearby ground wire (black wire)? (With the "Mixer" toggle switch in the "Forward" position.) See Fig. 8-7 Mixer Circuit	• Yes, replace din plug. • No, go to Step 2a.
2a	Is there 12Vdc between the "Mixer" toggle switch center post red wire and nearby ground source (black wire)?	• Yes, replace mixer toggle switch • No, go to step 2b.
2b	Is there 12Vdc at the lower terminal block red wire labeled Red-8 and Red Lid P.S.?	Yes to both then check for loose connections or broken wires between terminal block and mixer switch. Yes to Red Lid P.S. and No to Red-8 replace terminal block. No, go to step 3.
3	Is there 12Vdc between the P.S. lid switch red wires and a nearby ground source? (Check both red wires on the bottom of the lid switch with the lid closed.)	• Yes, on both red wires check for loose connections or broken wires between lid switch and terminal block. • Yes, on only one red wire when the lid is closed. Readjust the lid switch so that the lid completely depresses the switch, and then recheck for 12Vdc. If the same result happens, replace the lid switch. • No, go to step 3a.

©2018 by Crafco, Inc. All Rights Reserved

Table 8-22 Mixer Electrical Troubleshooting (continued)

Step	Possible Cause	If . . .
3a	Is there 12Vdc between the D.S. lid switch red wires and a nearby ground source? (Check both red wires on the bottom of the lid switch with the lid closed.)	• Yes, on both red wires check for loose connections or broken wires between D.S. lid switch and P.S. lid switch. • Yes, on only one red wire when the lid is closed. Readjust the lid switch so that the lid completely depresses the switch, and then recheck for 12Vdc. If the same result happens, replace the lid switch. • No, go to step 4.
4	Check for 12Vdc at red wire labeled Red Lid D.S. and pink wire labeled Pink-2 on terminal block and a nearby ground source (black wire).	• Yes on both, check for loose connections or broken wires between D.S. lid switch and terminal block. • No on Red Lid D.S. and Yes on Pink-2, ensure yellow jumper bar is securely installed between the two terminal blocks. • No, go to step 4a.
4a	Is there 12Vdc between the Material PAKSTAT terminal #2 pink wire and terminal #8 black ground wire? (Refer to Fig. 8-7 Mixer Circuit.)	• Yes, check for loose connections or broken wires between PAKSTAT terminal #2 and terminal block. • No, go to Step 4b
4b	Is there 12Vdc between the Material PAKSTAT terminal #1 orange wire and terminal #8 black ground wire?	• Yes, replace the Material PAKSTAT. • No, go to Step 4c.
4c	Is there 12Vdc between orange wire labeled ORN-1, terminal #9 and terminal #8 ground source (black wire)?	• Yes, check for loose connections or broken wires between terminals #8 and #1. • No, go to step 5.
5	Is there 12Vdc at orange wire labeled ORN-1 and ORN-2 on the upper terminal block?	• Yes on both, check for loose connections or broken wires between terminal block and material PAKSTAT. • Yes on ORN-2 and No on ORN-1 replace terminal block. • No on both, go to step 6.
6	Is there 12Vdc between orange wire labeled ORN-2 terminal #3 and terminal #5 black ground of hot oil PAKSTAT?	• Yes, check for loose connections or broken wires between terminal #3 and terminal block. • No, go to step 7.

©2018 by Crafco, Inc. All Rights Reserved

Chapter 8 Troubleshooting

If you are working on a compressor unit go to Table 8-7 Electrical Troubleshooting – 4LE2 Engine (continued) now.

Table 8-23 Mixer Electrical Troubleshooting (continued)

Step	Possible Cause	If . . .
7	Is there 12Vdc between top terminal of the power switch and a nearby ground (black wire)?	• Yes, check for loose connections or broken wires between toggle switch and hot oil PAKSTAT terminal #3. • No, go to step 7a.
7a	Is there 12Vdc between bottom terminal wire labeled RED-3 and a nearby ground source (black wire)?	• Yes, replace toggle switch. • No, go to step 8.
8	Is there 12Vdc between the top terminal of circuit breaker red wire labeled RED-3 and nearby ground source (black wire)?	• Yes, check for loose connections or broken wires between circuit breaker and toggle switch. • No, go to step 8a.
8a	Is there 12Vdc between the bottom terminal of circuit breaker red wire labeled RED-2 and nearby ground source (black wire)?	• Yes, replace circuit breaker. • No, go to step 9.
9	Is there 12Vdc between ignition switch “ACC” terminal and nearby ground source (black wire)?	• Yes, check for loose connections or broken wires between “ACC” terminal and circuit breaker. • No, go to Step 9a.
9a	Is there 12Vdc between “B” (blue wire) of ignition switch and nearby ground source (black wire)?	• Yes, replace ignition switch. • No, go to Step 10.
10	Is there 12Vdc between blue wire on starter solenoid and nearby ground source (black wire or bare metal on engine case)?	• Yes, check for loose or broken wire between starter solenoid and ignition switch. • No, go to step 10a.
10a	Check connections and condition of red battery cable?	• Yes, there should be 12Vdc at all previous steps. • No, replace battery cable.

©2018 by Crafco, Inc. All Rights Reserved

Fig. 8-6 Checking Din Plug Voltage

©2018 by Crafco, Inc. All Rights Reserved

Chapter 8 Troubleshooting

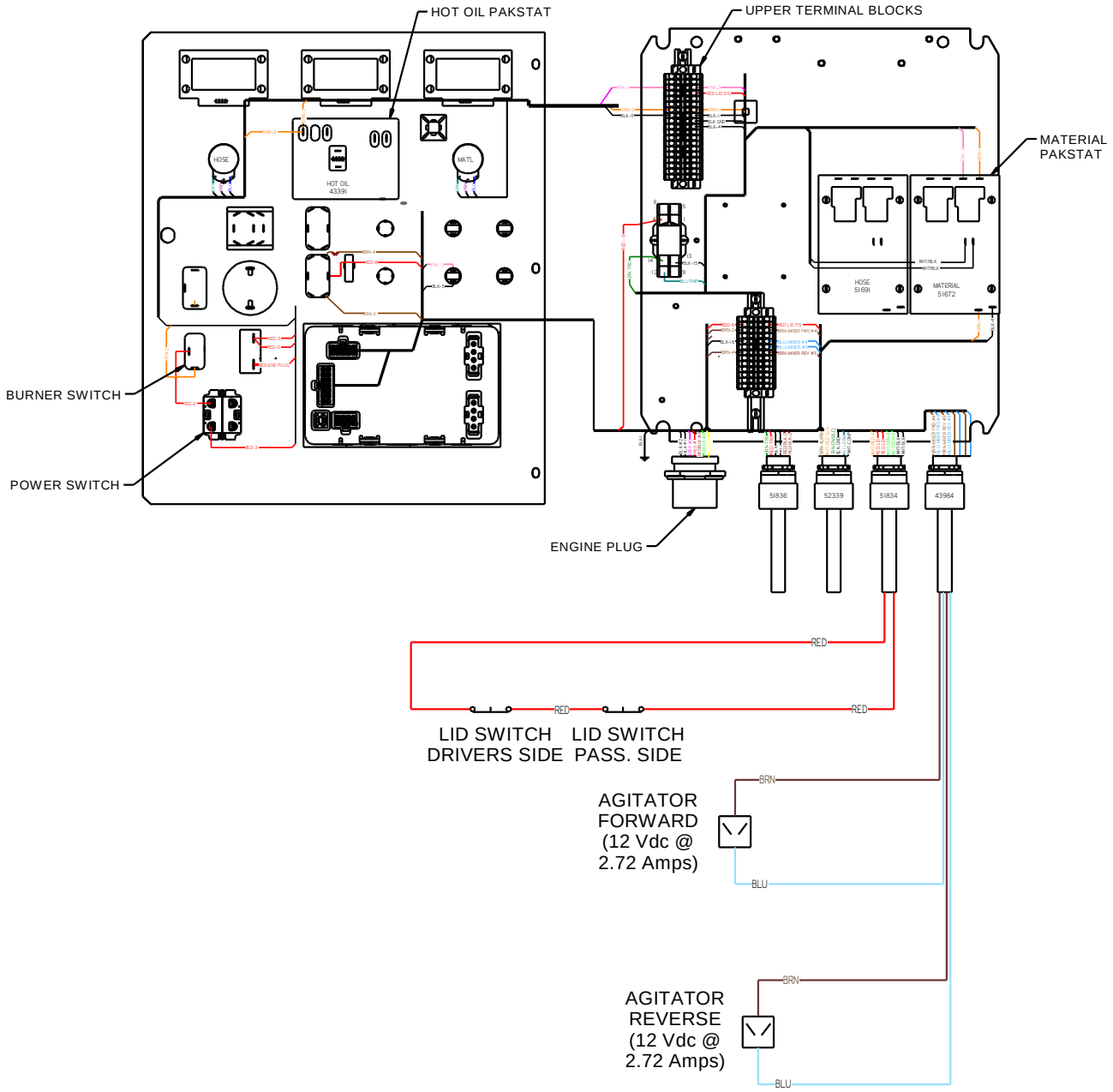

Fig. 8-7 Mixer Circuit

8.2.2 Mixer Hydraulic Troubleshooting

Table 8-24 Mixer Hydraulic Troubleshooting

Step	Possible Cause	If . . .
1	Remove the din plug, then remove the coil by unscrewing the nut on top of the coil. With the coil removed, re-attach the din plug and energize the coil by moving the mixer switch to Forward or Reverse, then insert a screw driver into the center of the coil. Does the coil magnetize when the din plug amber light is "ON"?	• Yes, go to Step 2. • No, replace the coil.
2	Is the relief pressure set correctly? (Refer to Fig. 8-8 Hydraulic Valve Pressure Setting, for pressure settings.)	• Yes, go to Step 3. • No, first turn "OFF" the Isuzu engine, then remove one of the two hydraulic hoses going to the agitator hydraulic motor, cap off the fitting on the motor and use a 3,000 PSI gauge with the proper JIC fitting, attach it to the hose. Start the Isuzu engine, turn "ON" the main power in the control box, move the "Mixer" toggle switch to the "Forward" position and read the pressure gauge. If the pressure needs to be adjusted use the pressure relief valve labeled "RVA", loosen the jam nut and adjust the pressure with the allen screw at the end of the relief. Turn clockwise to increase pressure and counter clockwise to decrease pressure, then tighten the jam nut to lock the pressure. Next turn "OFF" the Isuzu engine, remove the cap and pressure gauge, then re-attach the hose.
3	Is the hydraulic flow 1.5 GPM from the hydraulic valve? If you do not have a flow meter, call a local hydraulic shop to run the test for you.	• Yes, call Crafco, Inc. and speak to a customer service technician, you should have been able to find the problem. • No, replace the flow divider in the hydraulic valve.
4	Is the hydraulic flow correct from the hydraulic pump? If you do not have a flow meter, call a local hydraulic shop to run the test for you. (Refer Fig. 8-8 Hydraulic Valve Pressure Setting for flow rate).	• Yes, call Crafco, Inc. and speak to a customer service technician, you should have been able to find the problem. • No, replace the hydraulic pump.

©2018 by Crafco, Inc. All Rights Reserved

Chapter 8 Troubleshooting

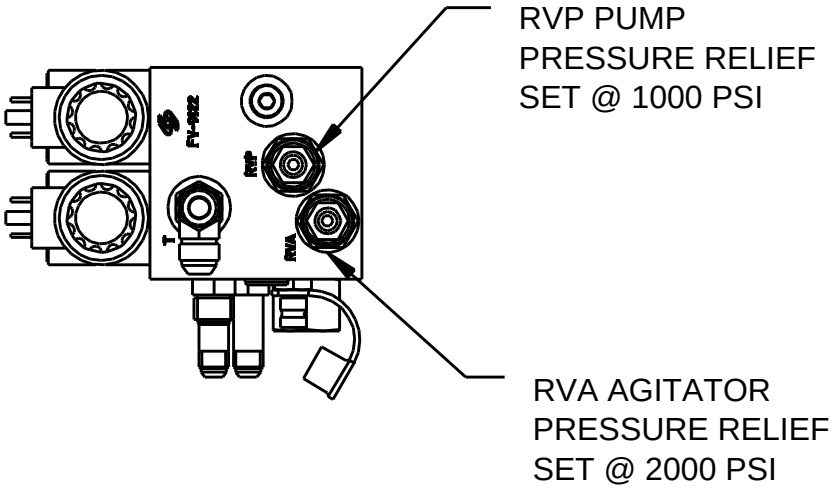

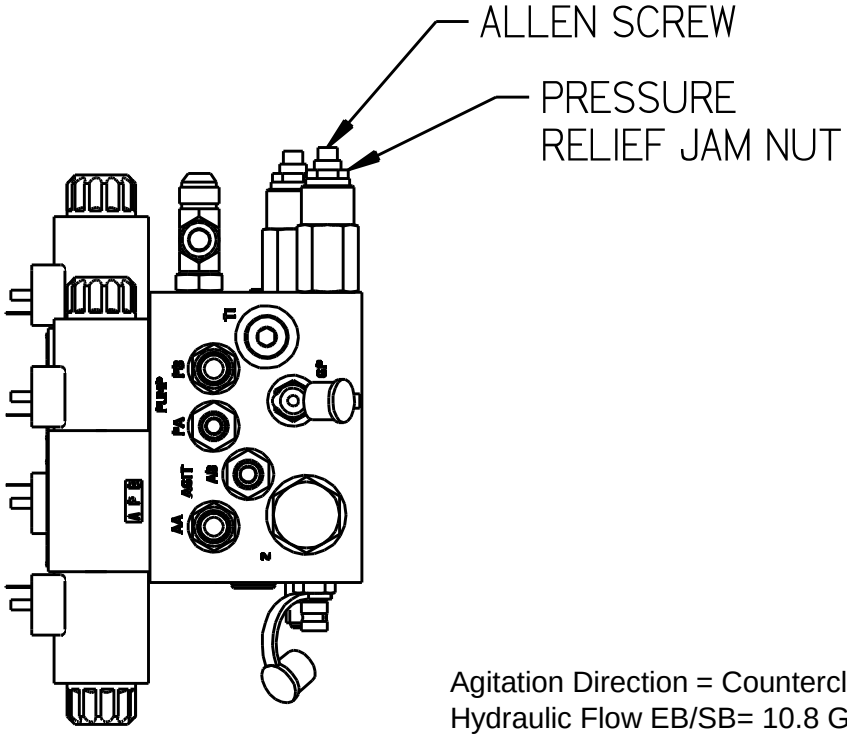

Agitation Direction = Counterclockwise
Hydraulic Flow EB/SB= 10.8 GPM @ 2400 RPM
Hydraulic Flow EC/SC = 7.94 GPM @ 2350 RPM
Hydraulic Flow EC/SC = 22.8 GPM @ 2350 RPM
Compressor Relief = 2500 PSI

Fig. 8-8 Hydraulic Valve Pressure Setting

©2018 by Crafco, Inc. All Rights Reserved

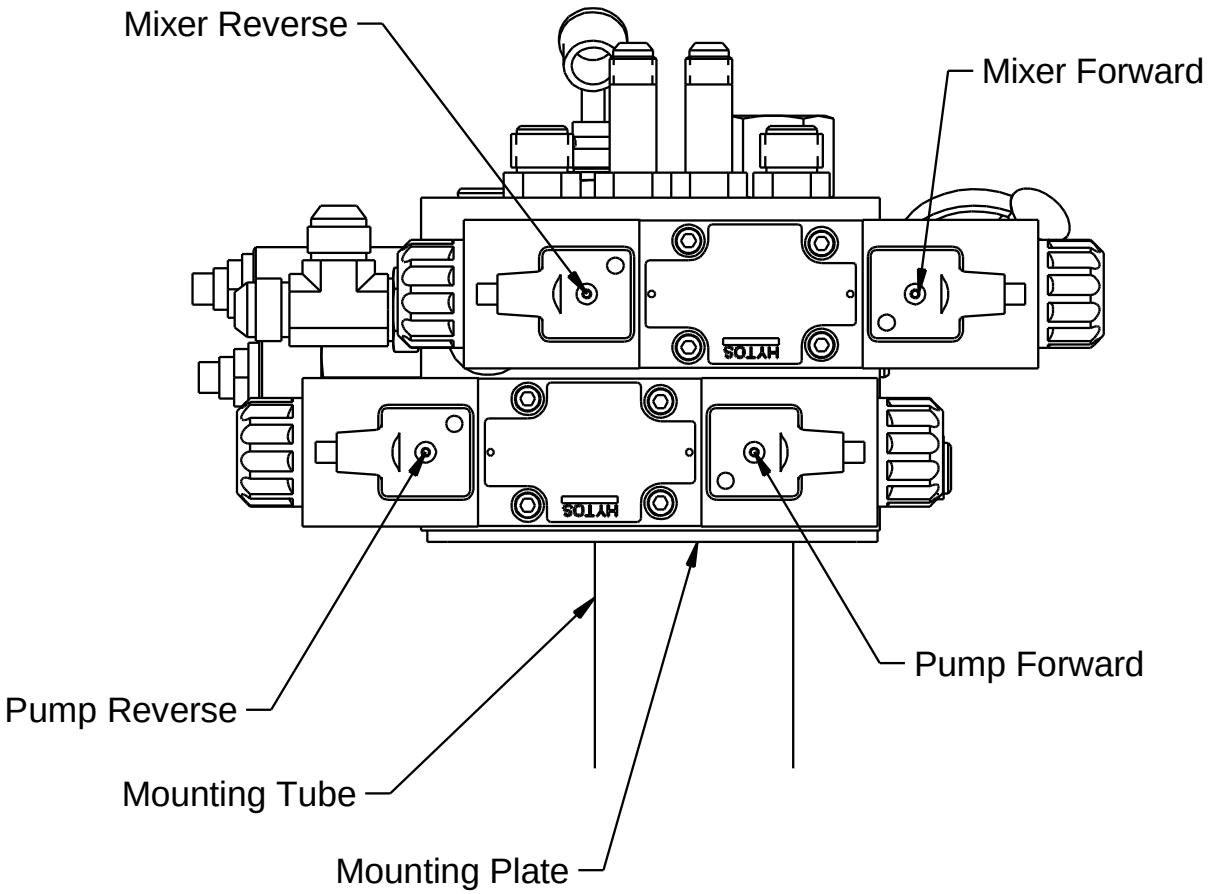

Fig. 8-9 Din Plug Layout

©2018 by Crafco, Inc. All Rights Reserved

8.3 Hose Troubleshooting

8.3.1 Symptom: Hose Does Not Heat

Table 8-25 Basic Visual Troubleshooting

Step	Possible Cause	If . . .
1	Is the Material Temperature Display at or above 275°F?	• Yes, go to Step 2. • No, continue to allow the machine to heat. (Make sure the Material dial and the Hot Oil dial are set at operating temperatures.)
2	Is the red "HEATED HOSE" light "ON"?	• Yes, go to Table 8-26 Electrical Troubleshooting • No, allow the machine to heat material to 275°F.
2a	Is the circuit breaker tripped?	• Yes, reset the circuit breaker by pushing in the button which has popped out. • No, go to Table 8-26 Electrical Troubleshooting

NOTE: Use Fig. 8-11 Hose Circuit Schematic while troubleshooting the hose electrical system.

Table 8-26 Electrical Troubleshooting

Step	Possible Cause	If . . .
1	Is there 12Vdc between “BATT” terminal of the generator and a nearby ground source (lug on battery tray)?	• Yes, go to Step 2. • No, go to Step 6.
2	Is there 24Vac between the white, green, and black wires? **NOTE**: Do this test inside the junction box. Check between black and white, black and green, and green and white.	• Yes, go to Step 3 • No, stop the engine, tighten the belt, restart engine and recheck output voltage. • Still no, replace the generator.
2a	Check the three heating element wires (blue) in the junction box for 30 Amps cold or 20-22 Amps hot. **NOTE**: Always use a clamp-on amp meter to perform this test. Each wire should have the same amp reading (+/- 1 amp).	• Yes, the hose should be working properly. • No, go to Step 3.

©2018 by Crafco, Inc. All Rights Reserved

Table 8-27 Electrical Troubleshooting (continued)

Step	Possible Cause	If . . .
3	Check for continuity in the hose from end to end. Disconnect the three blue heating element wires (blue) from the terminal block inside the junction box and disconnect the five pin plug between the hose and wand. Refer to Fig. 8-11 Hose Circuit Schematic. **NOTE**: Check each letter "D", "E", and "A" with the three blue wires on the other end of the hose. There should only be continuity on one wire to each letter.	• Yes, go to Step 3a. • No, either there was no continuity from one letter to the other end of the hose or there was more than one wire with continuity to a letter. This hose needs to be repaired or replaced. Contact Crafco, Inc. to send back the hose for repair.
3a	Check the RTD sensor in the hose against the readout in the control box. Disconnect the black and white wires from the terminal block in the junction box and test for ohms. Refer to Table 8-30 RTD Sensor Ohms vs. Temperature.	• Yes, the readout matches the table, go to Step 4. • No, this hose needs to be repaired or replaced. Contact Crafco, Inc. to send back the hose for repair.
4	Check for continuity in the wand between "D", "E", and "A". **NOTE**: Check between "D" and "E", "D" and "A", and "A" and "E".	• Yes, go to Step 5. • No, this wand needs to be repaired or replaced. Contact Crafco, Inc. to send back the wand for repair.
5	Is there 12Vdc between wire labeled "BLU-GEN" on the upper terminal block and nearby ground source (black wire)?	• Yes, check for loose or broken connections between terminal block "BATT" terminal of generator. • No, go to Step 6.
6	Is there 12Vdc between Hose PAKSTAT blue wire terminal #4 and black wire terminal #8?	• Yes, check for loose or broken wire between terminal #4 and the terminal block. • No, go to Step 6a.
6a	Is there 12Vdc between Hose PAKSTAT terminal #3 Pink wire and terminal #8 black wire?	• Yes, replace hose PAKSTAT. • No, go to Step 6b.
6b	Is there 12Vdc between Hose PAKSTAT pink wire terminal #1 and black wire terminal #8?	• Yes, check for loose or broken wires between terminal #1 and terminal #3. • No, go to Step 7.
7	Is there 12Vdc between pink wire labeled "PNK-1 on the upper terminal block and a nearby ground source (black wire)?	• Yes, check for loose or broken wire between terminal block and terminal #1. • No go to Step 7.
7a	Is there 12Vdc between pink wire labeled "PNK-4 and nearby ground source (black wire)?	• Yes, replace terminal block. • No, go to Step 8.

Table 8-28 Electrical Troubleshooting (continued)

Step	Possible Cause	If . . .
8	Is there 12Vdc between the Hose Selector switch pink wire labeled “PNK-4 (bottom left terminal) and a near” ground source black wire?	• Yes, check for loose or broken wires between switch and upper terminal block. • No, go to Step 8a.
8a	Is there 12Vdc between the Hose Selector switch pink wire Labeled “PNK-3” center left terminal and a nearby ground source.	• Yes, replace Hose Selector switch. • No, go to Step 9.
9	Is there 12Vdc between pink wire labeled “PNK-3 on the upper terminal block and a nearby ground source black wire?	• Yes, check for loose or broken wire between terminal block and hose selector switch. • No go to Step 9a.
9a	Is there 12Vdc between pink wire labeled “PNK-2” on upper terminal block and nearby ground source black wire?	• Yes, replace terminal block. • No, go to Table 8-22 Mixer Electrical Troubleshooting (continued). Steps 4a through 10a.

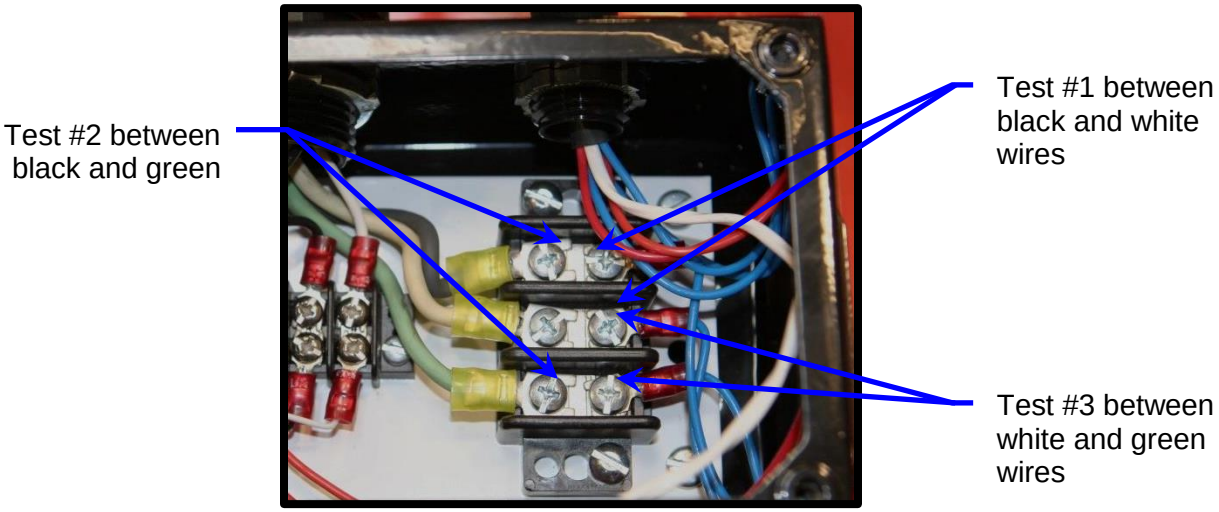

Fig. 8-10 Junction Box Voltage Testing

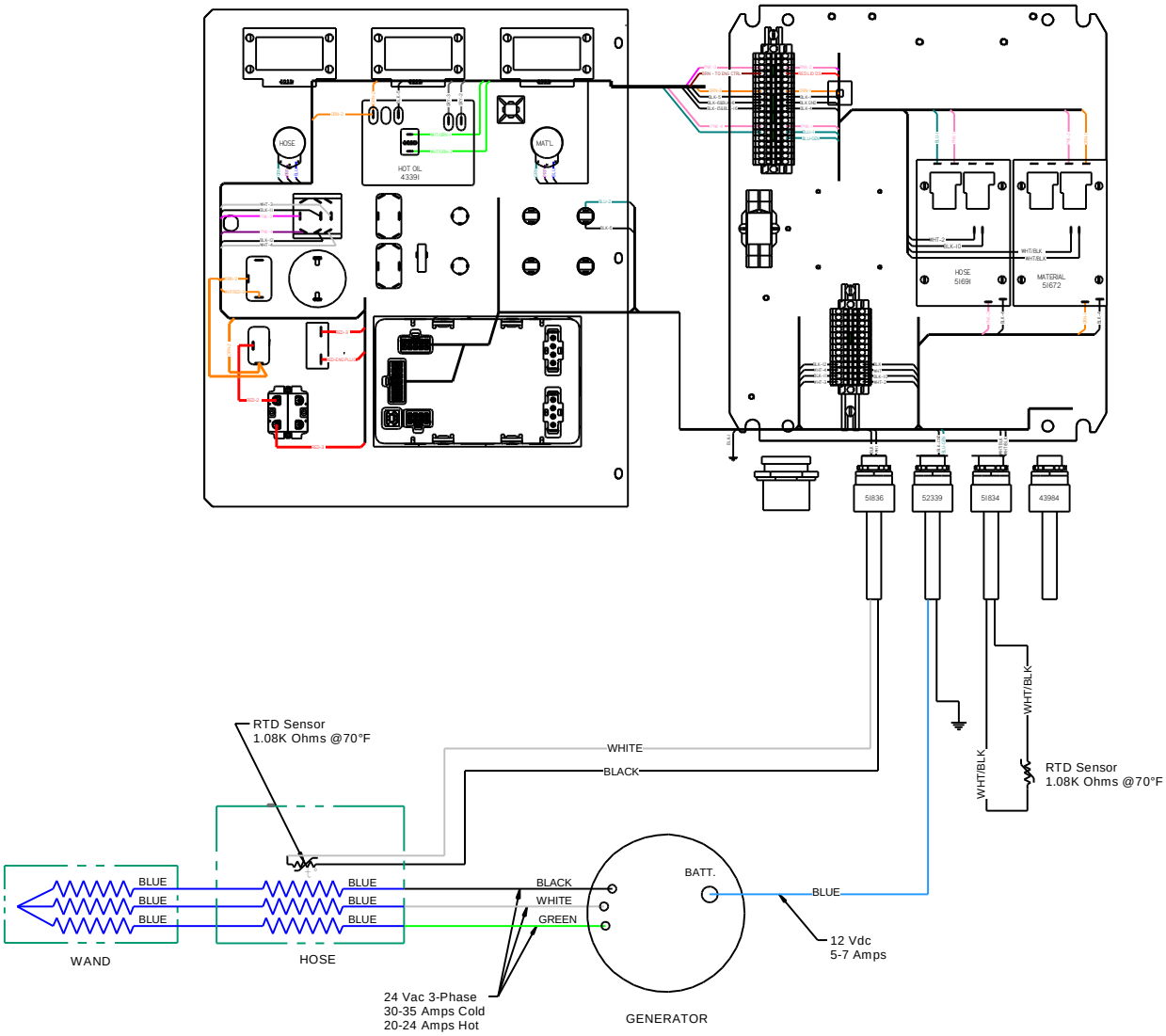

Fig. 8-11 Hose Circuit Schematic

Chapter 8 Troubleshooting

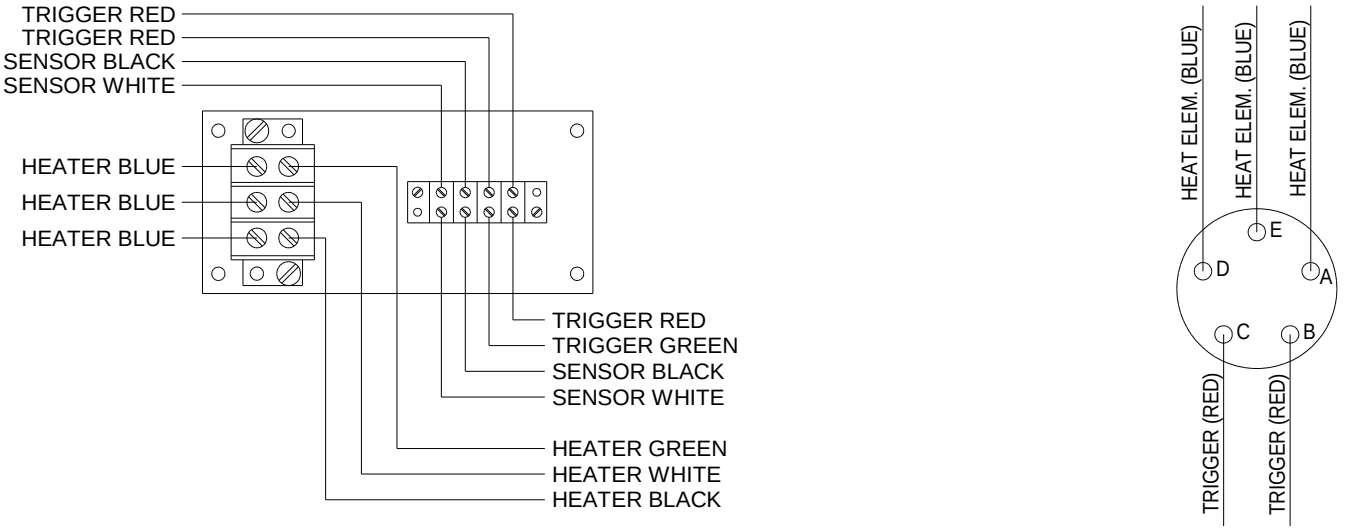

KETTLE END

WAND END

Fig. 8-12 Junction Box Wiring

©2018 by Crafco, Inc. All Rights Reserved

8.3.2 Symptom: Trigger is not Working

Table 8-29 Trigger is not Working

Step	Possible Cause	If . . .
1	Check continuity between two red wires coming from the hose in junction box. **NOTE:** These wires must be disconnected from the terminal block and the trigger depressed to perform this test.	• Yes, go to Table 8-32 Basic Visual Pump Troubleshooting • No, go to Step 2.
2	Disconnect the electrical connector between the hose and wand, check for continuity between C and B wand side.	• Yes, this hose needs to be repaired or replaced. Contact Crafco, Inc. to send back the hose for repair. • No, this wand needs to be repaired or replaced. Go to Wand Repair Instructions. If it still can't be fixed, Contact Crafco, Inc. to send back the wand for repair.

©2018 by Crafco, Inc. All Rights Reserved

8.3.3 RTD Sensor Ohms vs. Temperature

Table 8-23 below shows what the ohm reading would be for a given temperature. The following are the instructions for using the table.

Measure the resistance (ohms) of the sensor in question with an ohm meter (See 7.3 Checking Resistance (Ohms)) in Section 7.0 How to Use a Multimeter.

Find the reading in the chart (columns 0 through 9).

Follow the row to the left and get the temperature in 10°F increments, then follow the column up to get the 1°F increment. (For example, 1391 Ohms = 215°F)

Table 8-30 RTD Sensor Ohms vs. Temperature

°F	0	1	2	3	4	5	6	7	8	9
0	930.3	932.5	934.7	936.9	939.1	941.3	943.4	945.6	947.8	950.0
10	952.2	954.3	956.5	958.7	960.9	963.0	965.2	967.4	969.6	971.8
20	973.9	976.1	978.3	980.5	982.6	984.8	987.0	989.1	991.3	993.5
30	995.7	997.8	1000.0	1002.2	1004.3	1006.5	1008.7	1010.9	1013.0	1015.2
40	1017.4	1019.5	1021.7	1023.9	1026.0	1028.2	1030.4	1032.5	1034.7	1036.9
50	1039.0	1041.2	1043.4	1045.5	1047.7	1049.8	1052.0	1054.2	1056.3	1058.5
60	1060.7	1062.8	1065.0	1067.1	1069.3	1071.5	1073.6	1075.8	1077.9	1080.1
70	1082.2	1084.4	1086.6	1088.7	1090.9	1093.0	1095.2	1097.3	1099.5	1101.6
80	1103.8	1106.0	1108.1	1110.3	1112.4	1114.6	1116.7	1118.9	1121.0	1123.2
90	1125.3	1127.5	1129.6	1131.8	1133.9	1136.1	1138.2	1140.4	1142.5	1144.7
100	1146.8	1149.0	1151.1	1153.2	1155.4	1157.5	1159.7	1161.8	1164.0	1166.1
110	1168.3	1170.4	1172.5	1174.7	1176.9	1179.0	1181.1	1183.3	1185.4	1187.5
120	1189.7	1191.8	1194.0	1196.1	1198.2	1200.4	1202.5	1204.6	1206.8	1208.9
130	1211.0	1213.2	1215.3	1217.5	1219.6	1221.7	1223.9	1226.0	1228.1	1230.3
140	1232.4	1234.5	1236.7	1238.9	1240.9	1243.0	1245.2	1247.3	1249.4	1251.6
150	1253.7	1255.8	1258.0	1260.1	1262.2	1264.3	1266.5	1268.6	1270.7	1272.8
160	1275.0	1277.1	1279.2	1281.3	1283.5	1285.6	1287.7	1289.8	1292.0	1294.1
170	1296.2	1298.3	1300.4	1302.6	1304.7	1306.8	1308.9	1311.0	1313.2	1315.3
180	1317.4	1319.5	1321.6	1323.8	1325.9	1328.0	1330.1	1332.2	1334.3	1336.5
190	1338.6	1340.7	1342.8	1344.9	1347.0	1349.1	1351.2	1353.4	1355.5	1357.6
200	1359.7	1361.8	1363.9	1366.0	1368.1	1370.2	1372.4	1374.5	1376.6	1378.7
210	1380.8	1382.9	1385.0	1387.1	1389.2	1391.3	1393.4	1395.5	1397.6	1399.7
220	1401.8	1403.9	1406.0	1408.1	1410.3	1412.4	1414.5	1416.6	1418.7	1420.8
230	1422.9	1425.0	1427.1	1429.2	1431.3	1433.4	1435.5	1437.6	1439.6	1441.7
240	1443.8	1445.9	1448.0	1450.1	1452.2	1454.3	1456.4	1458.5	1460.6	1462.7
250	1464.8	1466.9	1469.0	1471.1	1473.2	1475.3	1477.3	1479.4	1481.5	1483.6
260	1485.7	1487.8	1489.9	1492.0	1494.1	1496.1	1498.2	1500.3	1502.4	1504.5

©2018 by Crafco, Inc. All Rights Reserved

Table 8-31 RTD Sensor Ohms vs. Temperature (continued)

°F	0	1	2	3	4	5	6	7	8	9
270	1506.6	1508.7	1510.8	1512.8	1514.9	1517.0	1519.1	1521.2	1523.3	1525.3
280	1527.4	1529.5	1531.6	1533.7	1535.7	1537.8	1539.9	1542.0	1544.1	1546.1
290	1548.2	1550.3	1552.4	1554.5	1556.5	1558.6	1560.7	1562.8	1564.8	1566.9
300	1569.0	1571.1	1573.1	1575.2	1577.3	1579.4	1581.4	1583.5	1585.6	1587.7
310	1589.7	1591.8	1593.9	1595.9	1598.0	1600.1	1602.2	1604.2	1606.3	1608.4
320	1610.4	1612.5	1614.6	1616.6	1618.7	1620.8	1622.8	1624.9	1627.0	1629.0
330	1631.1	1633.2	1635.2	1637.3	1639.3	1641.4	1643.5	1645.5	1647.6	1649.7
340	1651.7	1653.8	1655.8	1657.9	1660.0	1662.0	1664.1	1666.1	1668.2	1670.2
350	1672.3	1674.4	1676.4	1678.5	1680.5	1682.6	1684.6	1686.7	1688.7	1690.8
360	1692.9	1694.9	1697.0	1699.0	1701.1	1703.1	1705.2	1707.2	1709.3	1711.3
370	1713.4	1715.4	1717.5	1719.5	1721.6	1723.6	1725.7	1727.7	1729.8	1731.8
380	1733.9	1735.9	1737.9	1740.0	1742.0	1744.1	1746.1	1748.2	1750.2	1752.3
390	1754.3	1756.3	1758.4	1760.4	1762.5	1764.5	1766.6	1768.6	1770.6	1772.7
400	1774.7	1776.8	1778.8	1780.8	1782.9	1784.9	1786.9	1789.0	1791.0	1793.1
410	1795.1	1797.1	1799.2	1801.2	1803.2	1805.3	1807.3	1809.3	1811.4	1813.4
420	1815.4	1817.5	1819.5	1821.5	1823.6	1825.6	1827.6	1829.6	1831.7	1833.7
430	1835.7	1837.8	1839.8	1841.8	1843.8	1845.9	1847.9	1849.9	1851.9	1854.0
440	1856.0	1858.0	1860.0	1862.1	1864.1	1866.1	1868.1	1870.2	1872.2	1874.2
450	1876.2	1878.2	1880.3	1882.3	1884.3	1886.3	1888.3	1890.4	1892.4	1894.4
460	1896.4	1898.4	1900.5	1902.5	1904.5	1906.5	1908.5	1910.5	1912.6	1914.6
470	1916.6	1918.6	1920.6	1922.6	1924.6	1926.6	1928.7	1930.7	1932.7	1934.7
480	1936.7	1938.7	1940.7	1942.7	1944.7	1946.8	1948.8	1950.8	1952.8	1954.8
490	1956.8	1958.8	1960.8	1962.8	1964.8	1966.8	1968.8	1970.8	1972.8	1974.8
500	1976.8	1978.8	1980.8	1982.9	1984.9	1986.9	1988.9	1990.9	1992.9	1994.9
510	1996.9	1998.9	2000.9	2002.9	2004.9	2006.9	2008.8	2010.8	2012.8	2014.8
520	2016.8	2018.8	2020.8	2022.8	2024.8	2026.8	2028.8	2030.8	2032.8	2034.8
530	2036.8	2038.8	2040.8	2042.8	2044.7	2046.7	2048.7	2050.7	2052.7	2054.7
540	2056.7	2058.7	2060.7	2062.7	2064.6	2066.6	2068.6	2070.6	2072.6	2074.6
550	2076.6	2078.5	2080.5	2082.5	2084.5	2086.5	2088.5	2090.4	2092.4	2094.4

©2018 by Crafco, Inc. All Rights Reserved

8.4 Pump Troubleshooting

8.4.1 Symptom: Material Does Not Dispense When the Pump is Activated

Table 8-32 Basic Visual Pump Troubleshooting

Step	Possible Cause	If . . .
1	Is the Hose Temperature Display at or above 325°F?	• Yes, go to Step 2. • No, continue to allow the hose to heat. (Make sure the Hose dial is set at proper operating temperature.)
2	Is the red "Pump" light "ON"?	• Yes, go to Step 3. • No, go to Table 8-33 Pump Electrical Troubleshooting.
3	Is the hose selector switch in the “ELECTRIC” position as well as the pump switch should be in “ON ELECTRIC” position?	• Yes, go to Step 4. • No, move the toggle switches to the proper positions.
4	With the wand in the shoebox, pull the wand trigger and look at the material pump shaft coupler. Is it spinning clockwise?	• Yes, shut down machine and look for a plug in the plumbing. • No, adjust the material flow control to increase the flow. • Still no, go to Step 5.
5	Inside the control box and under the front panel, find the relay cube for the pump. It is found near the middle, left-hand side of the box. It is a clear yellow cube with a green button facing the top of the control box. When the trigger is engaged does the green light illuminate?	• Yes, this indicates that 12Vdc is reaching the relay coil. Go to Table 8-34 Pump Electrical Troubleshooting (continued) Step 5 to find the problem. • No, go to Table 8-33 Pump Electrical Troubleshooting, Steps 2 to find the problem.
6	Is the hydraulic fluid level near the center of the sight gauge when the machine is cold? See Fig. 5-1 Hydraulic Fluid Level and Temp. Gauge	• Yes, go to Table 8-33 Pump Electrical Troubleshooting. • No, fill oil to the center of the sight gauge.

©2018 by Crafco, Inc. All Rights Reserved

Chapter 8 Troubleshooting

NOTE: Use Fig. 8-13 Pump Circuit Schematic while troubleshooting the pump electrical system.

Table 8-33 Pump Electrical Troubleshooting

Step	Possible Cause	If . . .
1	Is the amber light "ON" on the Din Plug when the trigger is actuated? For pump forward din plug location Refer to Fig. 8-9 Din Plug Layout	• Yes, then the pump should be working. If it is not working see Table 8-37 Pump Hydraulic Troubleshooting • No, go to Step 1a.
1a	Unscrew the center screw of the din plug so you can pull the din plug up 1/4" in order to check voltage. Is there 12Vdc from side post to side post?	• Yes, the electrical system for the pump is working properly. Refer to Table 8-37 Pump Hydraulic Troubleshooting • No, go to Step 4.
2	Is there 12Vdc between red wire labeled "TRIGGER RED" in junction box and nearby ground source?	• Yes, go to Step 2a. • No, go to Table 8-35 Pump Electrical Troubleshooting (continued) Step 10 for an Electric Hose. • No, for a Standard Hose is normal because this circuit is not used.
2a	Is there 12Vdc between green wire labeled "TRIGGER GRN" in junction box and nearby ground source? **NOTE:** Wand trigger must be actuated during this test.	• Yes, go to Step 3. • No, see Table 8-29 Trigger is not Working
3	Is there 12Vdc between green wire on terminal #14 of pump relay and black wire terminal #13 pump relay? **NOTE:** Wand trigger must be actuated during this test.	• Yes, go to Step 5. • No, check for loose or broken wire between relay and junction box.
4	Is there 12Vdc between the brown wire located on the lower set of terminal blocks, top right terminal and 5th terminal down on the right blue ground wire? **NOTE**: Wand Trigger must be actuated or pump switch in "ON STANDARD" position during this test.	• Yes, replace Din Plug. • No, go to Step 4a.
4a	Is there 12Vdc between the blue wire located on the lower set of terminal blocks, top left terminal and 5th terminal down on the left black ground wire? **NOTE**: Trigger must be actuated or pump switch in "ON STANDARD" position during this test.	• Yes, replace terminal block. • No, go to Step 5.

©2018 by Crafco, Inc. All Rights Reserved

Table 8-34 Pump Electrical Troubleshooting (continued)

Step	Possible Cause	If . . .
5	Is there 12Vdc between the blue wire on terminal #12 of pump relay and the black wire on terminal #13 of pump relay? **NOTE**: Trigger must be actuated or pump switch in "ON STANDARD" position during this test.	• Yes, check for loose or broken wire between terminal #12 and the terminal block. • No, go to Step 5a for Electric Hose. • No, go to Step 5b for Standard Hose.
5a	Is there 12Vdc on red wire terminal #8 of pump relay and black wire terminal #13?	• Yes, replace relay. • Go to Step 6
5b	Is there 12Vdc on red wire terminal #4 of pump relay and black wire terminal #13? **NOTE:** This only applies to "ON STANDARD" position of pump switch.	• Yes, replace relay. • No, go to Step 7.
6	Is there 12Vdc between red wire labeled RED-1 upper terminal block and a nearby ground source (black wire)?	• Yes, check for loose or broken wire between terminal block and terminal #8. • No, go to Step 6a.
6a	Is there 12Vdc between red wire labeled RED-4 upper terminal block and nearby ground source (black wire)?	• Yes, replace terminal block. • No, go to Table 8-23 Mixer Electrical Troubleshooting (continued) steps 9-10a.
7	Is there 12Vdc between red wire labeled RED-9 on top right hand terminal of pump switch and a nearby ground source?	• Yes, check for loose or broken wire between pump switch and pump relay. • No, go to Step 7a.
7a	Is there 12Vdc between purple wire labeled PRP-3 on center right hand terminal of pump switch and a nearby ground source (black wire)?	• Yes, replace pump switch. • No, go to Step 8.
8	Is there 12Vdc between purple wire labeled PRP-3 top left terminal of hose selector switch and nearby ground (black wire)?	• Yes, check for loose or broken wire between hose selector switch and pump switch. • No go to Step 8a.
8a	Is there 12Vdc between pink wire labeled PNK-3 center left terminal of hose selector switch and nearby ground (black wire)?	• Yes, replace hose selector switch. • No, go to Step 9.
9	Is there 12Vdc between pink wire labeled PNK-3 upper terminal block and nearby ground (black wire)?	• Yes, check for loose or broken wire between terminal block and hose selector switch. • No, go to Step 9a.

©2018 by Crafco, Inc. All Rights Reserved

Table 8-35 Pump Electrical Troubleshooting (continued)

Step	Possible Cause	If . . .
9a	Is there 12Vdc between pink wire labeled PNK-2 upper terminal block and nearby ground (black wire)?	• Yes, replace terminal block. • No, go to Table 8-22 Mixer Electrical Troubleshooting (continued) Steps 4a through 10a.
10	Is there 12Vdc between red wire labeled “RED-TRIG” upper terminal block and nearby ground source (black wire)?	• Yes, check for loose or broken wire between terminal block and junction box. • No, go to Step 11.
11	Is there 12Vdc between purple wire labeled “PRP-1” upper terminal block and nearby ground source (black wire)?	• Yes, ensure the yellow jumper in the middle of the terminal blocks is connected to the “PRP-1” and “RED-TRIG” wires is pushed in all the way. • No, Go to Step 12
12	Is there 12Vdc between purple wire on terminal #2 of hose PAKSTAT and terminal #8 black ground wire?	• Yes, check for loose or broken wire between PAKSTAT and terminal block. **NOTE** This wire has a diode that could be bad and cause an open circuit. • No, go to Step 12a.
12a	Is there 12Vdc between pink wire on terminal #1 of hose PAKSTAT and terminal #8 black ground wire?	• Yes, replace the hose PAKSTAT. • No, go to Step 13.
13	Is there 12Vdc between pink wire labeled “PNK-1” upper terminal blocks and nearby ground source (black wire)?	• Yes, check for loose or broken wire between terminal blocks and hose PAKSTAT. • No, go to Step 13a
13a	Is there 12Vdc between pink wire labeled “PNK-4” upper terminal blocks and nearby ground source (black wire)?	• Yes, replace terminal block. • No, go to Step 14.
14	Is there 12Vdc between pink wire labeled “PNK-4” lower left terminal of hose selector switch and nearby ground source (black wire)?	• Yes, check for loose or broken wire between hose selector switch and terminal block. • No, go to Step 14a.
14a	Is there 12Vdc between pink wire labeled “PNK-3” center left terminal of hose selector switch and nearby ground source (black wire)?	• Yes, replace hose selector switch. • No, go to Step 15.

©2018 by Crafco, Inc. All Rights Reserved

Table 8-36 Pump Electrical Troubleshooting (continued)

Step	Possible Cause	If . . .
15	Is there 12Vdc between pink wire labeled “PNK-3 on the upper terminal block and a nearby ground source black wire?	• Yes, check for loose or broken wire between terminal block and hose selector switch. • No go to Step 9a.
15a	Is there 12Vdc between pink wire labeled “PNK-2” on upper terminal block and nearby ground source black wire?	• Yes, replace terminal block. • No, go to Table 8-22 Mixer Electrical Troubleshooting (continued) Steps 4a through 10a.

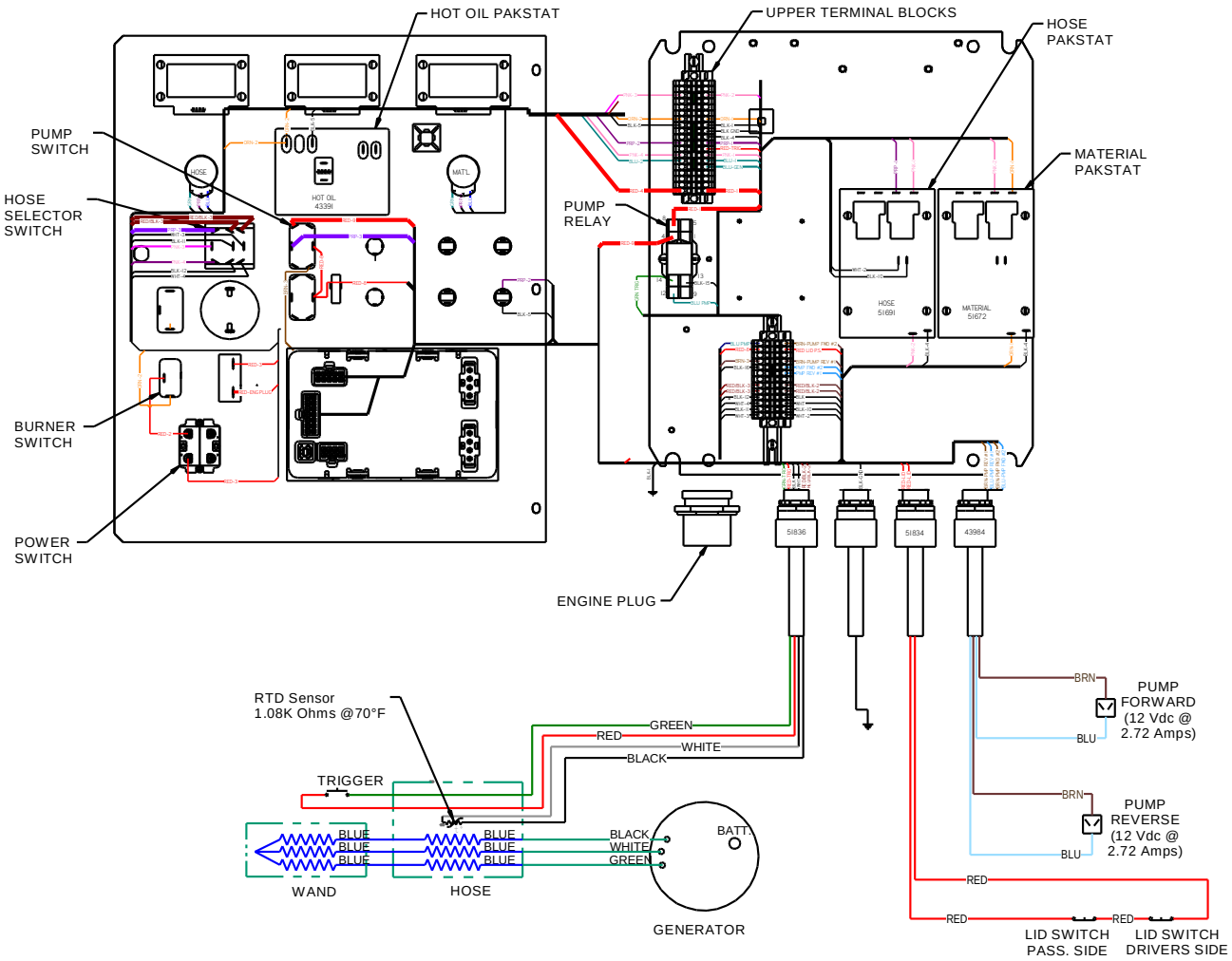

Fig. 8-13 Pump Circuit Schematic

8.4.2 Pump Hydraulic Troubleshooting

Table 8-37 Pump Hydraulic Troubleshooting

Step	Possible Cause	If…
1	Does the coil magnetize when the din plug amber light is "ON"?	• Yes, go to Step 2. • No, remove the din plug, then remove the coil by unscrewing the nut on the end of the coil. With the coil removed reattach the din plug and place a metal screw driver in the center of the coil to see if the coil is magnetic. If it is not, recheck the din plug is plugged into the coil and the amber light is "ON". If still not magnetic replace the coil.
2	Is the relief pressure set correctly? (Refer to Fig. 8-8 Hydraulic Valve Pressure Setting).	• Yes, go to Step 3. • No, first turn "OFF" the Isuzu engine, then remove one of the two hydraulic hoses going to the pump hydraulic motor, cap off the fitting on the motor and use a 3000 PSI gauge with the proper JIC fitting, attach it to the hose. Start the Isuzu engine, turn "ON" the main power in the control box, pull the wand trigger and read the pressure gauge. If the pressure needs to be adjusted use the pressure relief valve marked "RVP", loosen the jam nut and adjust the pressure with the allen screw at the end of the relief. Turn clockwise to increase pressure and counter clockwise to decrease pressure, then tighten the jam nut to lock pressure. Next turn "OFF" the Isuzu engine, remove the cap, pressure gauge and reattach the hose.
3	Is the hydraulic flow correct from the hydraulic pump? (Refer to Fig. 8-8 Hydraulic Valve Pressure Setting).	• Yes, call Crafco, Inc. and speak to a service technician. You should have been able to find the problem. • No, call a local hydraulic shop to see if they can run a hydraulic pump flow test, using the information in Fig. 8-8 Hydraulic Valve Pressure Setting

©2018 by Crafco, Inc. All Rights Reserved

Chapter 8 Troubleshooting

8.5 Engine Diagnostic Trouble Codes (DTC)

8.5.1 How to use the Diagnostic Trouble Code Table

The engine supplied on the EZ 1000 Series II 100CFM Compressor machine is capable of displaying Diagnostic Trouble Codes (DTC) on the engine control panel display. If your engine displays a DTC, most likely you will have to contact your local engine repair center for service. To locate your closest engine repair center, please go here: http://www.isuzuengines.com/#!/network or call 734-582-9470 and they can help you locate your closest repair center. To use the table, find the SPN and FMI # from the control panel screen, and match it to the first column in the table listed as “SPN-FMI”. Please see the following figure below:

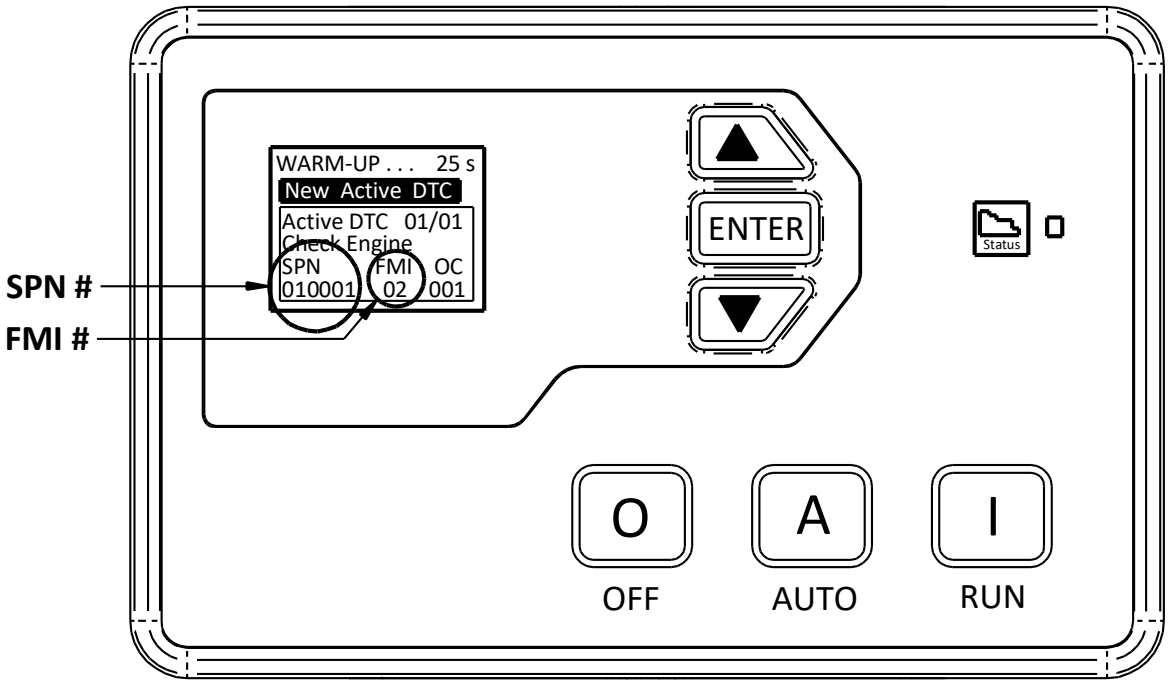

YOUR SPN-FMI # IS "10001-2". FIND ON THE TABLE BELOW

10001-2 = EGR position sensor malfuntion

Fig. 8-14 Engine Control Display DTC

8.5.2 Engine DTC Table (47600EC100, 47600SC100)

Table 8-38 Engine DTC Table PN 47600EC100, 47600SC100

SPN-FMI	Failure Type
10001-13	EGR zero-point learning malfunction
10001-2	EGR position sensor malfunction
10002-2	EGR valve control malfunction
10003-2	Injection nozzle common 1 driving system malfunction
10004-2	Injection nozzle common 2 driving system malfunction
10005-1	Charge circuit malfunction bank 1

©2018 by Crafco, Inc. All Rights Reserved

Table 8-39 Engine DTC Table PN 47600EC100, 47600SC100 (Continued)

10006-1	Charge circuit malfunction bank 2
10007-2	CPU monitoring IC malfunction
10008-2	A/D conversion malfunction
10009-2	5V power supply 3 voltage malfunction
100-1	Engine oil pressure drop
10010-2	5V power supply 4 voltage malfunction
10013-2	EEPROM malfunction
100-3	Engine oil press sensor malfunction (high voltage)
10032-2	QR code malfunction
10033-2	RAM malfunction
100-4	Engine oil press sensor malfunction (low voltage)
10045-2	ADIC malfunction
10050-2	Injector IC malfunction
10051-2	Injector IC communicate malfunction
10052-2	Injector IC check sum malfunction
102-3	Boost pressure sensor malfunction (high voltage)
102-4	Boost pressure sensor malfunction (low voltage)
105-3	Boost temp sensor malfunction (high voltage)
105-4	Boost temp sensor malfunction (low voltage)
1077-2	CPU malfunction
1079-2	5V power supply 1 voltage malfunction
1080-2	5V power supply 2 voltage malfunction
108-3	Baro pressure sensor malfunction (high voltage)
108-4	Baro pressure sensor malfunction (low voltage)
110-0	Over heat
110-3	Water temp sensor malfunction (high voltage)
110-4	Water temp sensor malfunction (low voltage)
1131-3	Manifold temp sensor malfunction (high voltage)
1131-4	Manifold temp sensor malfunction (low voltage)
1239-1	Common rail pressure down (No pump pressure feed)
1239-17	Common rail pressure down (pump pressure feed insufficient)
1347-3	SCV driving system + B short
1347-4	SCV driving system disconnection, GND short
1381-3	Fuel filter clogging sensor malfunction (high voltage)
1381-4	Fuel filter clogging sensor malfunction (low voltage)
1485-5	Main relay system malfunction (not connected)
1485-6	Main relay system malfunction (not disconnected)
157-15	Common rail pressure malfunction (pump over pressure feed)
157-3	Common rail press sensor malfunction (high voltage)
157-4	Common rail press sensor malfunction (low voltage)
158-3	Battery system high voltage malfunction
172-3	Intake air temp sensor malfunction (high voltage)
172-4	Intake air temp sensor malfunction (low voltage)
174-3	Fuel temp sensor malfunction (high voltage)
174-4	Fuel temp sensor malfunction (low voltage)
190-0	Over run

©2018 by Crafco, Inc. All Rights Reserved

Table 8-40 Engine DTC Table PN 47600EC100, 47600SC100 (Continued)

628-2	ROM malfunction
633-7	Pressure limited open
636-2	Cam sensor malfunction (no signal)
636-7	Cam sensor phase shifting
639-19	CAN Bus malfunction
651-5	Injection nozzle 1 driving system disconnection
652-5	Injection nozzle 2 driving system disconnection
653-5	Injection nozzle 3 driving system disconnection
654-5	Injection nozzle 4 driving system disconnection
676-5	Glow relay malfunction
677-5	Starter cut relay malfunction
723-2	Crank sensor malfunction (no or abnormal signal)
91-2	Accelerator sensor 1-2 comparison malfunction
91-3	Accelerator sensor 1-2 malfunction (high voltage)
91-4	Accelerator sensor 1-2 malfunction (low voltage)
968-2	Idle up down switch malfunction

©2018 by Crafco, Inc. All Rights Reserved

Chapter 9 Illustrated Parts List

9.0 About the Illustrated Parts List

The Illustrated Parts List (IPL) is designed to help technical service or maintenance personnel correctly identify orderable replacement parts.

The figure and table titles reference the part number (PN) to which they apply. The PN's for each of the EZ 1000 Series II Diesel Melter machine models are as follows:

EZ1000 Series II Electric Base Diesel Melter PN46200EB

EZ1000 Series II Standard Base Diesel Melter PN46200SB

EZ1000 Series II Electric Base Diesel Melter with 100CFM Air Compressor PN47600EC100

EZ1000 Series II Standard Base Diesel Melter with 100CFM Air Compressor PN47600SC100

Illustrations are designed to show general shape and size of a part and the relationship that part has to other parts. Actual size and shape of parts or components may differ or vary from the actual part or component.

9.1 Ordering Crafco Parts

Crafco distributors and Crafco Pavement Preservation Supply Centers are strategically located throughout the United States. Parts can be ordered from your local Crafco distributor or directly from Crafco, Inc. if a distributor is not available in your area.

When ordering parts, give the following information:

- Part Number
- Machine Model
- Serial Number

Write, call, or Fax Crafco, Inc. at the following:

Crafco, Inc. Headquarters
6165 W. Detroit St.
Chandler, AZ 85226
Phone: (602) 276-0406
Toll Free: (800) 528-8242
Fax: (480) 961-0513

Visit our website at www.crafco.com

©2018 by Crafco, Inc. All Rights Reserved

Chapter 9 Illustrated Parts List

9.2 EZ1000 Series II EZ1000 Melters: 47600EC100 / 47600SB100 / 46200EB / 46200SB

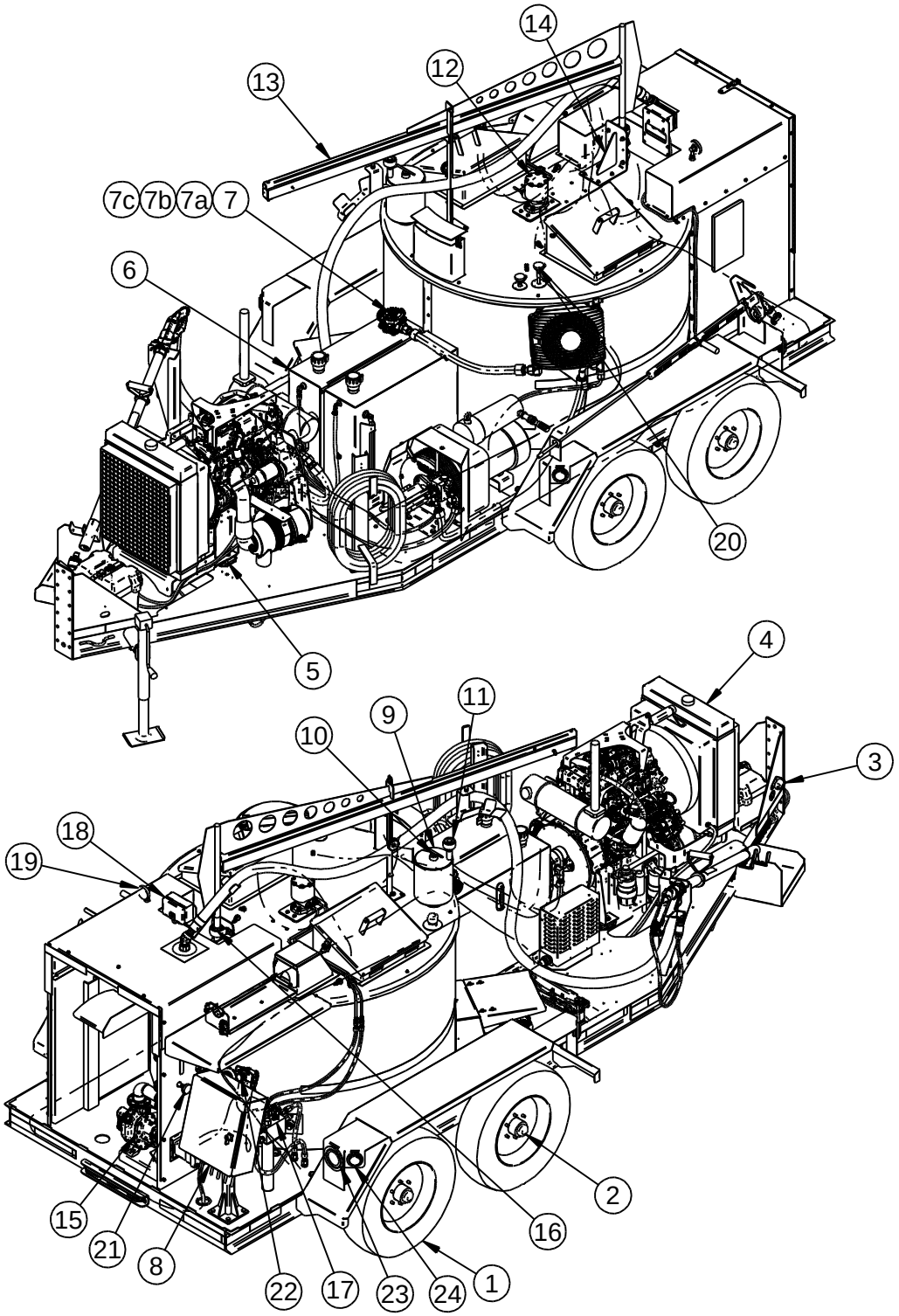

Fig. 9-1 EZ1000 Series II Melters: 47600EC100 / 47600SB100 (NOT SHOWN) / 46200EB (NOT SHOWN) / 46200SB (NOT SHOWN)

©2018 by Crafco, Inc. All Rights Reserved

Chapter 9 Illustrated Parts List

FIG.	ITEM	PART NO.	DESCRIPTION	QTY.
Fig. 9-1	1	44342	TIRE AND WHEEL ASSEMBLY	4
	2	45007	TORSIONAL AXLE ASSEMBLY	2
	3	23117	BREAKAWAY SWITCH	1
	4	47103	ENGINE ASSEMBLY – 46200EB	1
	4	47100	ENGINE ASSEMBLY – 46200SB	1
	4	47110	ENGINE ASSEMBLY – 47600SC100	1
	4	47111N	ENGINE ASSEMBLY – 47600EC100	1
	5	29399	ISOMOUNT 46200EB/SB	4
	5	46473	ISOMOUNT 47600EC100/47600SC100	4
	6	46255	HYDRAULIC TANK ASSEMBLY	1
	7	45498	HYDRAULIC FILTER ASSEMBLY	1
	7a	45438	HYDRAULIC FILTER ELEMENT	1
	7b	45440	O-RING, HYDRAULIC FILTER	1
	7c	45497	GASKET, HYDRAULIC FILTER	1
	8	47201	CONTROL BOX ASSEMBLY – 46200SB	1
	8	47202	CONTROL BOX ASSEMBLY – 46200EB	1
	8	47210	CONTROL BOX ASSEMBLY – 47600EC100	1
	8	47215	CONTROL BOX ASSEMBLY – 47600SC100	1
	9	43355	OVERFLOW TANK	1
	10	46265	DIPSTICK	1
	11	26025	AIR BREATHER	1
	12	42574	MOTOR, HYDRAULIC – AGITATOR	1
	13	46010	BOOM – HOSE	1
	14	45579	BASE, BOOM	1
	15	43127	MATERIAL PUMP ASSEMBLY	1
	16	45553	BEARING, BOOM	2
	17	45433	HYDRAULIC CONTROL VALVE ASSEMBLY	1
	18	44028	JUNCTION BOX ASSY – 47600EC100 & 46200EC ONLY	1
	19	25057	GAUGE, HOSE COMPARTMENT	1
	20	43465	SENSOR, RTD	2
	21	56940	SENSOR, RTD – PUMPING TEMPERATURE	1
	22	46060	VALVE, FLOW CONTROL	1

©2018 by Crafco, Inc. All Rights Reserved

Chapter 9 Illustrated Parts List

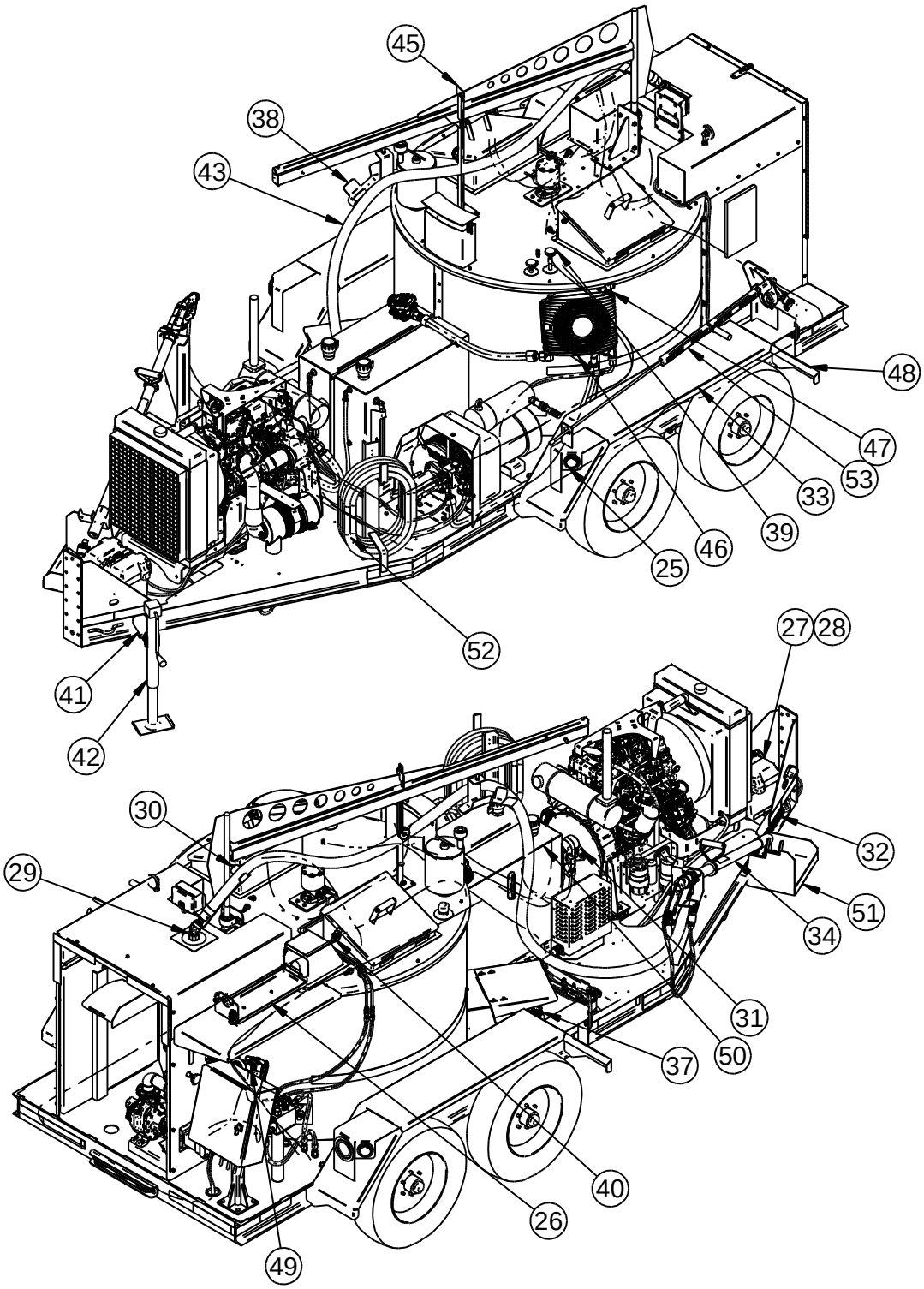

Fig. 9-2 EZ1000 Series II Melter: 47600EC100 / 47600SB100 (NOT SHOWN) / 46200EB (NOT SHOWN) / 46200SB (NOT SHOWN)

©2018 by Crafco, Inc. All Rights Reserved

Chapter 9 Illustrated Parts List

FIG.	ITEM	PART NO.	DESCRIPTION	QTY.
Fig. 9-2	23	32363	TAIL LIGHT, STOP, TURN, AND TAIL	2
	24	24040	SIDE MARKER, RED	2
	25	24041	CLEARENCE MARKER, YELLOW	2
	26	46707	SUPPORT ASSEMBLY, WAND	1
	27	24000	BATTERY	1
	28	24002	BATTERY BOX	1
	29	27048	SWIVEL, HOSE (For standard hose)	OPT.
	30	46340	SUPPORT, HOSE	1
	31	45439	HYDRAULIC PUMP ASSEMBLY – 46200EB/SB	1
	31	45491N	HYDRAULIC PUMP ASSEMBLY – 47600EC100/SC100	1
	32	20130	SAFETY CHAIN	2
	33	46182	FENDER ASSEMBLY, D.S.	2
	34	52200	WAND ASSEMBLY – ELECTRIC	OPT.
	34	41629	WAND – STANDARD HOSE (See options)	OPT.
	35	41208	HANDLE W/ VALVE (See options)	OPT.
	36	45372	EXHAUST PIPE – EB/SB	1
	37	41881	NOZZLE, BURNER (Not Shown)	1
	38	46053	HOSE HANGER	1
	39	51065	CORD GRIP	3
	40	39608	SWITCH, LID	1
	41	23095	BUSHING, JACK ASSEMBLY	1
	42	23082	JACK ASSEMBLY, 7000#	1
	43	52400	ELECTRIC HEATED HOSE, 15’	OPT.
	44	27009	HOSE, 20’ SEALANT (See options)	OPT.
	45	46263	BOOM LOCK ASSEMBLY	1
	46	45762	HYDRAULIC OIL COOLER	1
	47	45542	TEMPERATURE SWITCH, COOLER (Not shown)	1
	48	46172	FENDER ASSEMBLY, P.S.	1
	49	46077	KNOB, FLOW CONTROL	1

©2018 by Crafco, Inc. All Rights Reserved

Chapter 9 Illustrated Parts List

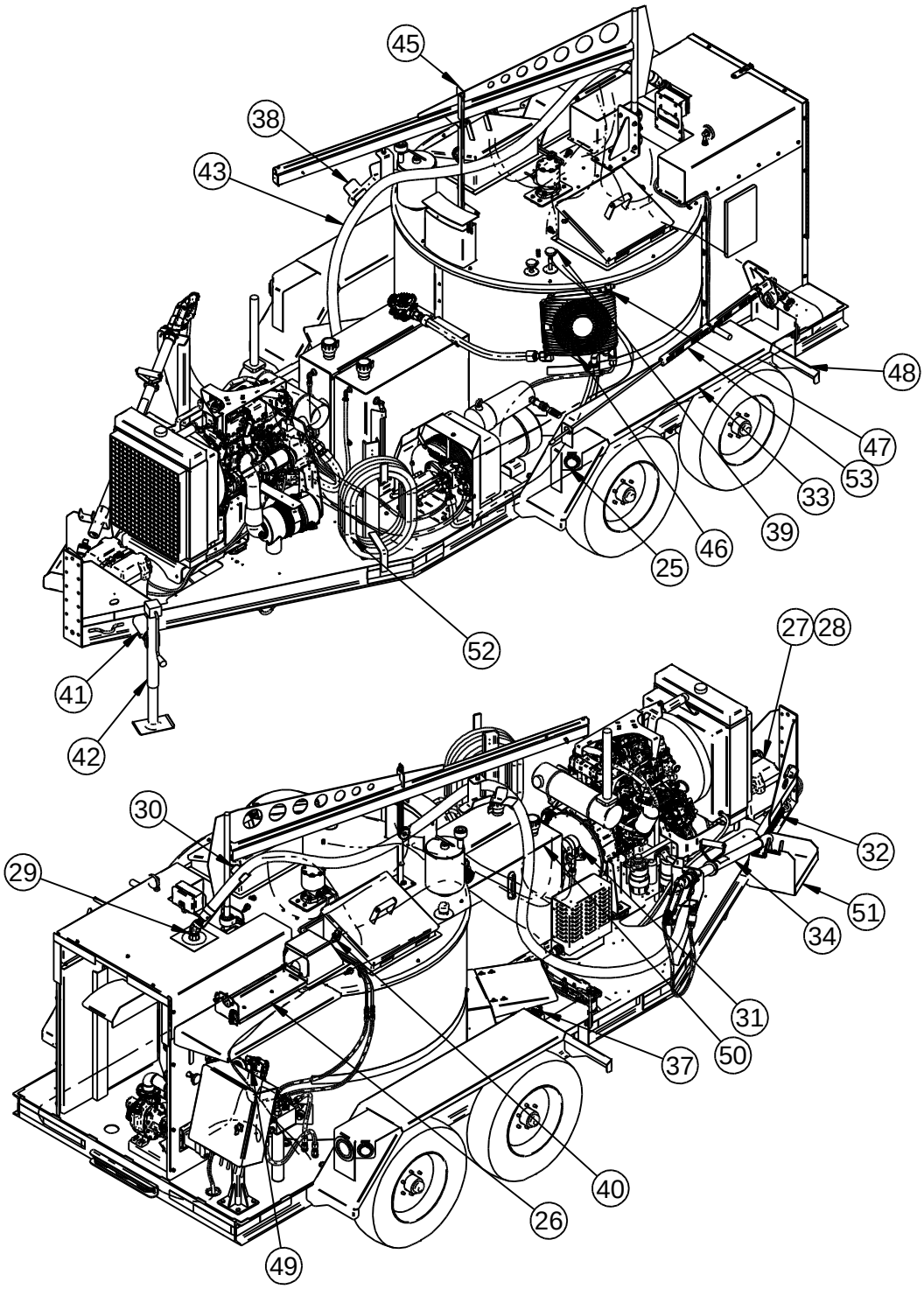

Fig. 9-3 EZ1000 Series II Melter: 47600EC100 / 47600SB100 (NOT SHOWN) / 46200EB (NOT SHOWN) / 46200SB (NOT SHOWN)

©2018 by Crafco, Inc. All Rights Reserved

Chapter 9 Illustrated Parts List

FIG.	ITEM	PART NO.	DESCRIPTION	QTY.
Fig. 9-3	50	47060N	TANK, DIESEL	1
	51	46041	DRIP PAN	1
	52	47482N	HOSE, AIR, 3/4” X 50 FT – 47600EC100 & 47600SC100	1
	53	47483N	LANCE, AIR, HIGH OUTPUT – 47600EC100 & 47600SC100	1

©2018 by Crafco, Inc. All Rights Reserved

Chapter 9 Illustrated Parts List

9.3 EZ1000 Series II Melter Options

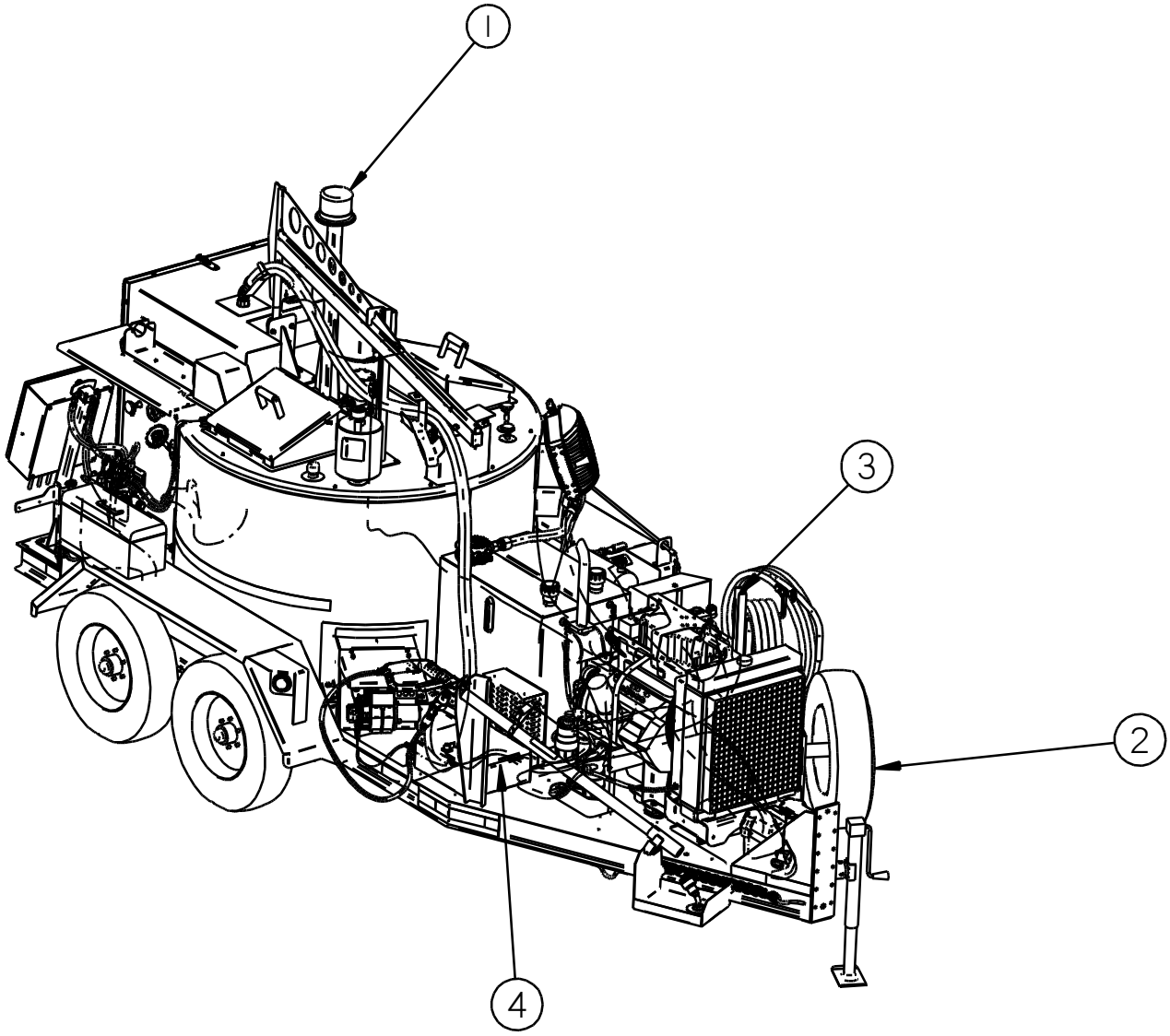

Fig. 9-4 EZ1000 Series II Melter Options

FIG.	ITEM	PART NO.	DESCRIPTION	QTY.
Fig. 9-4	1	46170K	STROBE LIGHT KIT	1
	2	43549	KIT, SPARE TIRE	1
	3	47485N	RACK, AIR HOSE	1
	4	46260	TOOL BOX, LARGE	1

©2018 by Crafco, Inc. All Rights Reserved

This page left blank intentionally

Chapter 9 Illustrated Parts List

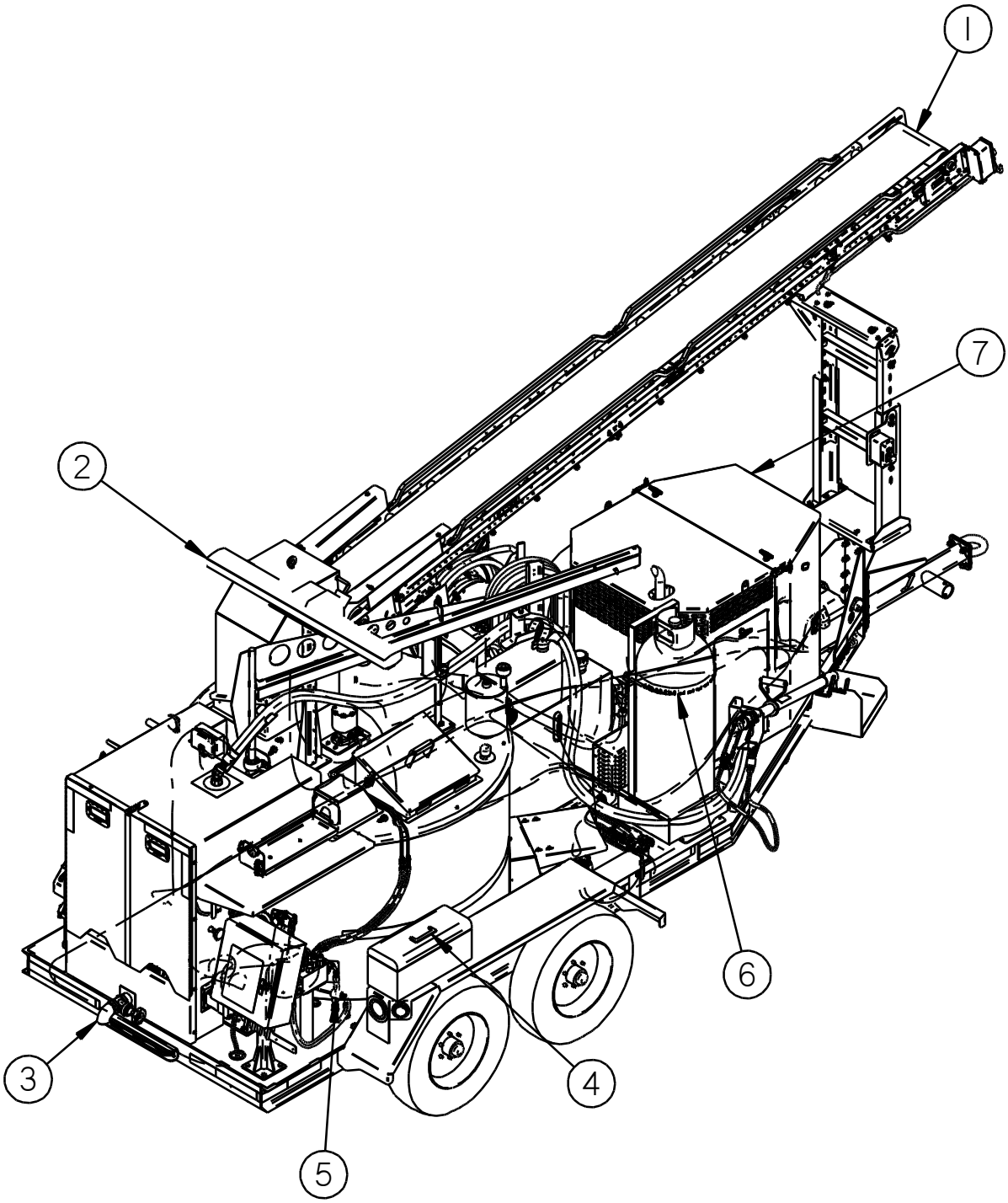

Fig. 9-5 EZ1000 Series II Melter Options

Chapter 9 Illustrated Parts List

FIG.	ITEM	PART NO.	DESCRIPTION	QTY.
Fig. 9-5	1	51399	CONVEYOR ASSEMBLY	1
	2	46280K	ARROW BOARD	1
	3	46279	KIT, GRAVITY FEED	1
	4	26098	TOOL BOX	1
	5	24190K	HEATER, FIREROD, 110V	1
	5a	24194K	HEATER, FIREROD, 220V	1
	6	41259K	KIT, 100# PROPANE TANK	1
	7	47500	ENGINE COVER ASSEMBLY – 4600EC100, 47600SC100	1
	N/A	47525N	INSULATION KIT, ENG CVR- 47600EC100,47600SC100	1

©2018 by Crafco, Inc. All Rights Reserved

Chapter 9 Illustrated Parts List

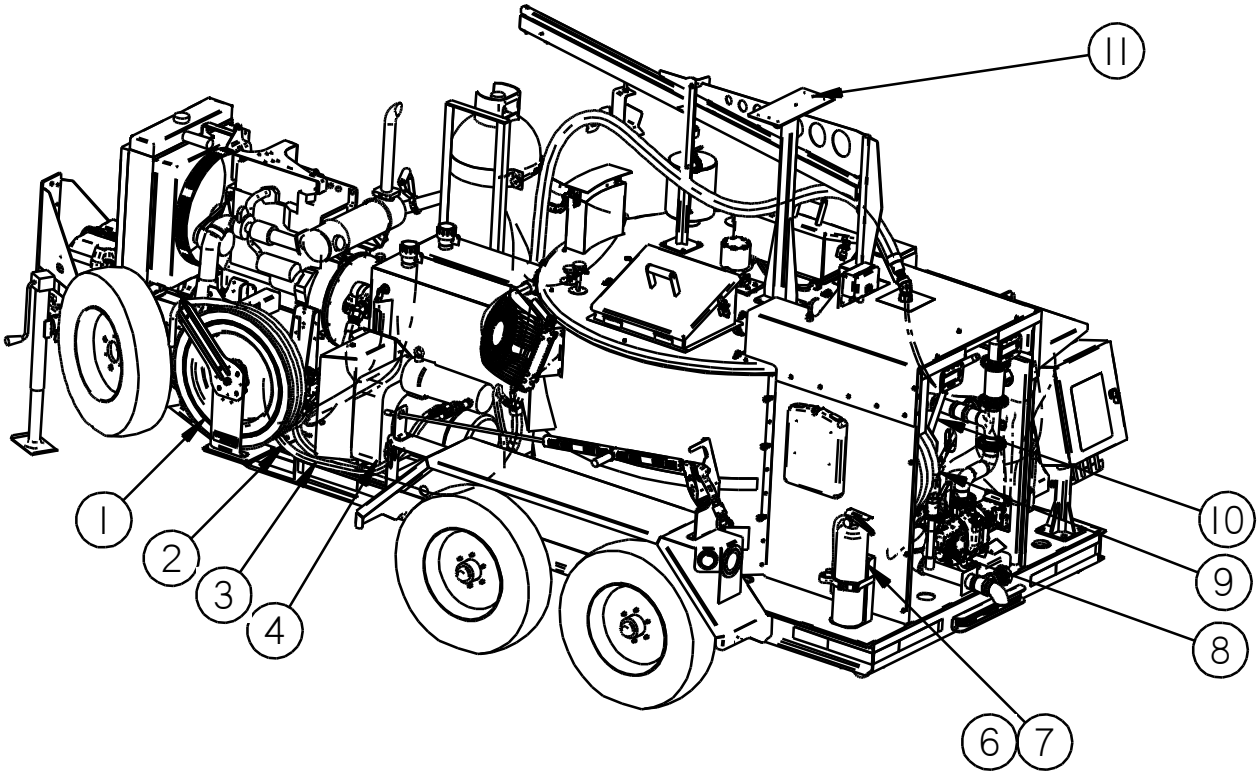

Fig. 9-6 EZ1000 Series II Melter Options

©2018 by Crafco, Inc. All Rights Reserved

Chapter 9 Illustrated Parts List

FIG.	ITEM	PART NO.	DESCRIPTION	QTY.
Fig. 9-6	1	47636N	HOSE REEL	1
	1	47638N	HOSE REEL, STAINLESS STEEL	1
	2	47652N	MOUNT, REEL	1
	3	47650N	FLEXHOSE, ¾ X 55”	1
	4	47480N	COMPRESSOR ASSEMBLY	1
	5	29878	MALE ELBOW ADAPTOR (NOT SHOWN)	1
	6	26058	FIRE EXTINGUISHER W/ COVER	1
	7	26058	BRACKET, FIRE EXTINGUISHER	1
	8	41208	HANDLE ASSEMBLY WITH VALVE	1
	9	27009	20’ SEALANT HOSE	1
	10	41629	HAND WAND ASSEMBLY	1
	11	46160K	LIGHT BAR KIT	1
	12	45650	HOT AIR LANCE (NOT SHOWN)	1
	13	47491N	KIT, WATER SEPARATOR FILTER (NOT SHOWN)	1

©2018 by Crafco, Inc. All Rights Reserved

Chapter 9 Illustrated Parts List

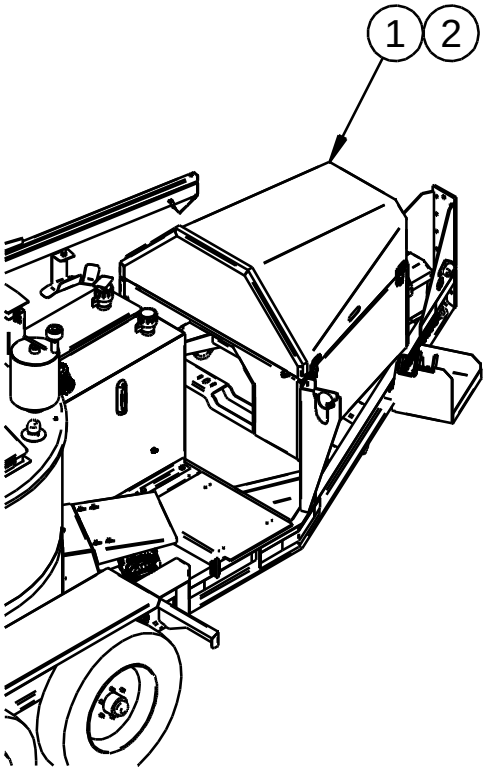

Fig. 9-7 EZ1000 Series II Melter Options

	ITEM	PART NO.	DESCRIPTION	QTY.
Fig. 9-7	N/A	46374	INSULATION KIT, ENG CVR - 46200EB,46200SB	1
	1	45535	ENGINE COVER ASSEMBLY- 46200EB, 46200SB	1
	2	44151	PLATE, SUPPORT – ENGINE COVER	2
	3	46748	GAS SPRING	1

©2018 by Crafco, Inc. All Rights Reserved

Chapter 9 Illustrated Parts List

9.4 Tank Detail

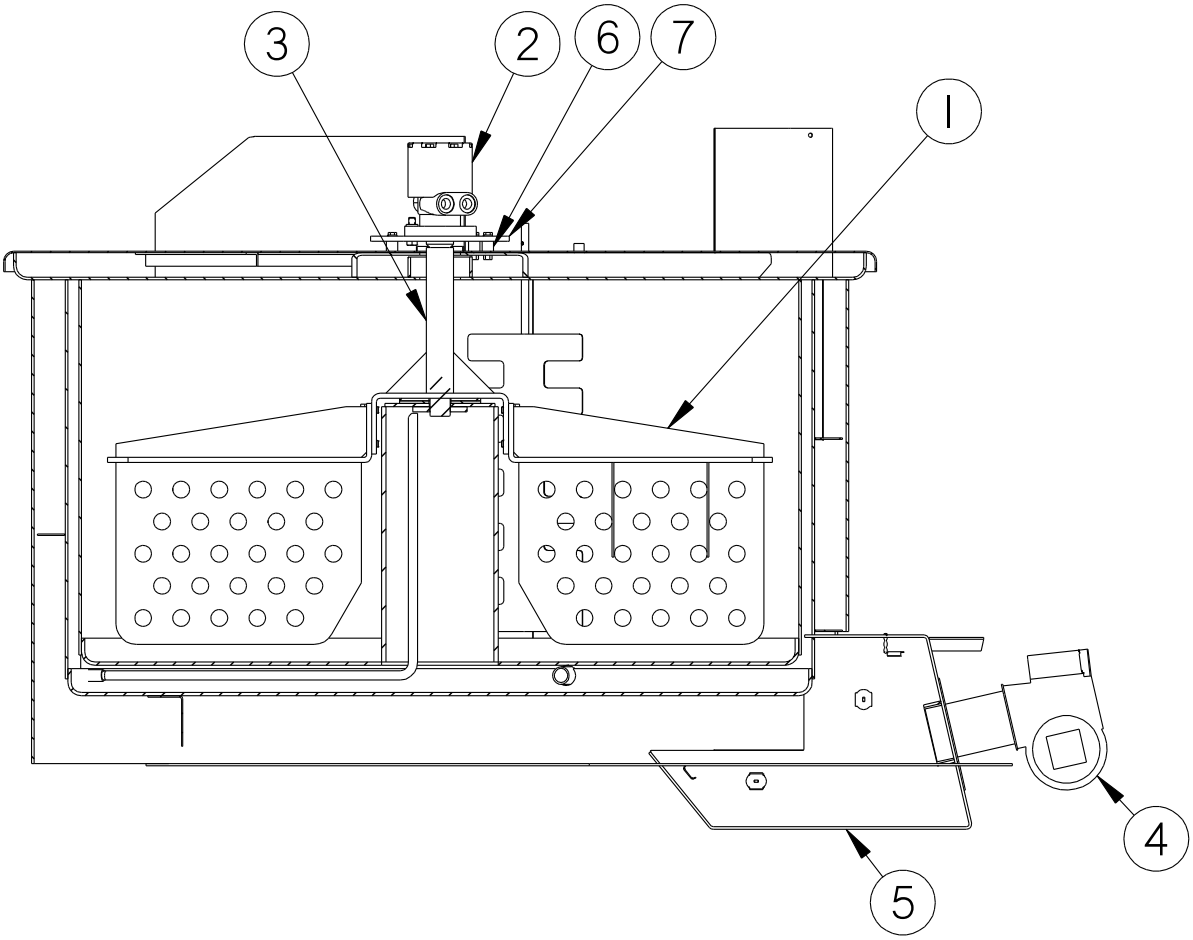

Fig. 9-8 Tank Detail

FIG.	ITEM	PART NO.	DESCRIPTION	QTY.
Fig. 9-8	1	46246	PADDLE, AGITATOR	2
	2	42574	MOTOR, HYDRAULIC – AGITATOR	1
	3	46050	SHAFT ASSEMBLY – AGITATOR	1
	4	46380	BURNER, 14 VOLT DIESEL	1
	5	46058	BURNER BOX ASSEMBLY	1
	5a	43179	BURNER BOX INSULATION KIT	1
	6	42573	MOUNTING PLATE – MOTOR	1
	7	40030	SPACER. MOTOR	4

©2018 by Crafco, Inc. All Rights Reserved

Chapter 9 Illustrated Parts List

9.5 Plumbing

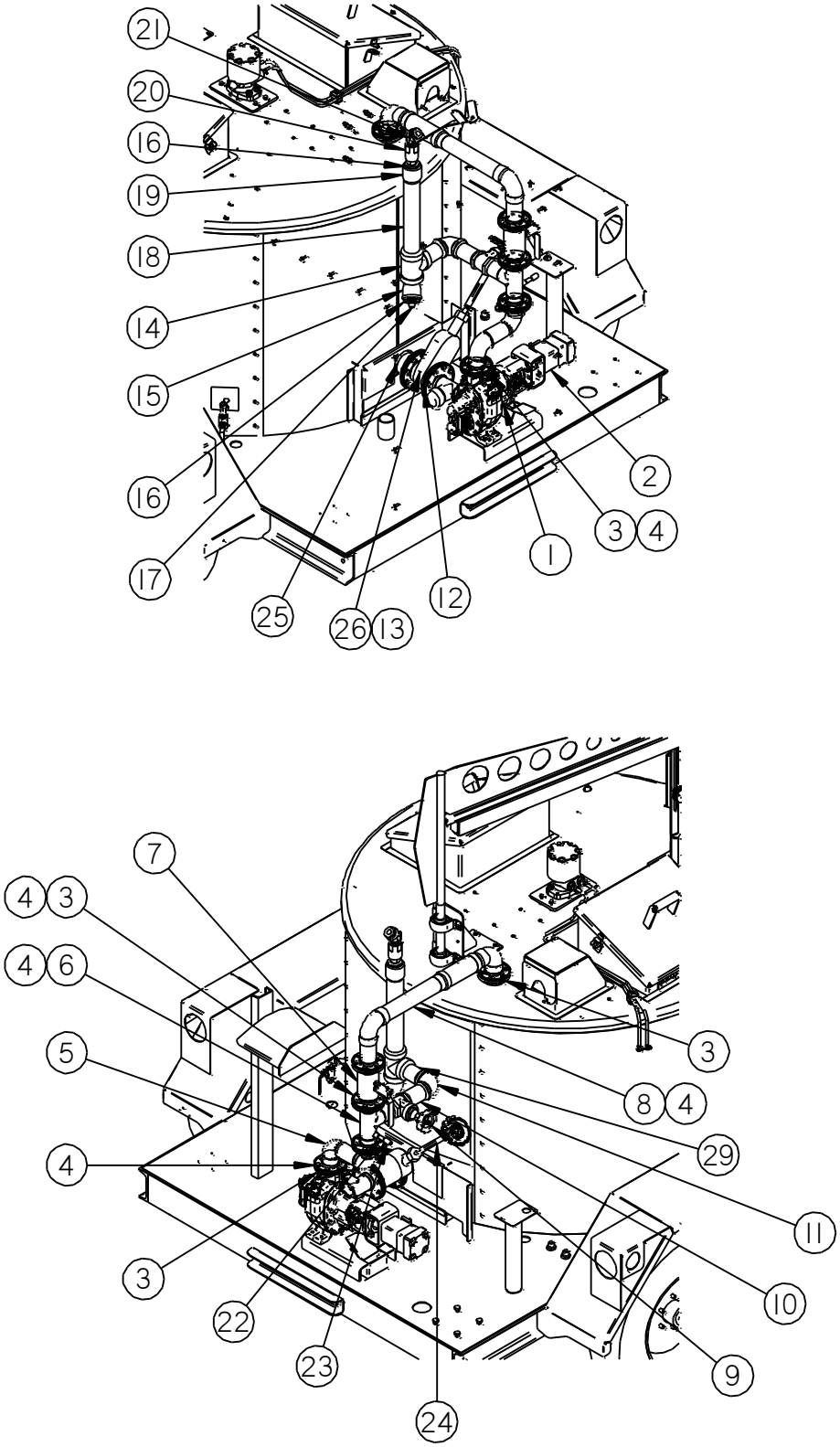

Fig. 9-9 Plumbing

Chapter 9 Illustrated Parts List

FIG.	ITEM	PART NO.	DESCRIPTION	QTY.
Fig. 9-9	1	46020	PUMP ASSEMBLY	1
	2	22027	HYDRAULIC MOTOR	1
	3	22030	NIPPLE ASSEMBLY, FLANGED	2
	4	29050	GASKET, 2” CIRCULAR FLANGED	5
	5	46668	ELBOW, DOUBLE	1
	6	46678	FLANGED TEE	1
	7	41246	VALVE, 2” BALL	1
	8	46675	PIPING ASSEMBLY, UPPER	1
	9	29270	VALVE, 2” GATE	1
	10	28060	NIPPLE, 2” NPT X 5” LG.	1
	11	28213	ELBOW, 2” NPT	1
	12	46371	TEE, LOWER SUCTION	1
	13	29060	GASKET, 3” CIRCULAR FLANGED	2
	14	28258	TEE, 2” PIPE	1
	15	28242	ELBOW, 2” 45° PIPE	1
	16	28358	BUSHING, 2” X 1” HEX HEAD REDUCER	2
	17	28285	PLUG, 1” SQ. HEAD PIPE	1
	18	28190	NIPPLE, 2” NPT X 14.5” LG.	1
	19	28183	COUPLING, 2” PIPE	1
	20	27048	SWIVEL, 1” PIPE	1
	21	28225	ELBOW, 1” STREET	1
	22	28351	BUSHING, 1” X 3/4” HEX HEAD REDUCER	1
	23	28043	NIPPLE, 1/4” NPT X 2” LG.	1
	24	28176	COUPLING, 1/4” PIPE	1
	25	46509	EXTENSION, VALVE HANDLE	1
	26	46065	FLEXHOSE ASSEMBLY, 2 1/2” X 8 1/4” LG.	1
	27	29292	VALVE, 3” FLANGED GATE	1
	28	28048	NIPPLE, 2” NPT X 4” LG.	1
	29	28273	CAP, 2” PIPE	1

©2018 by Crafco, Inc. All Rights Reserved

9.6 Control Box Assembly 47202 – 46200EB

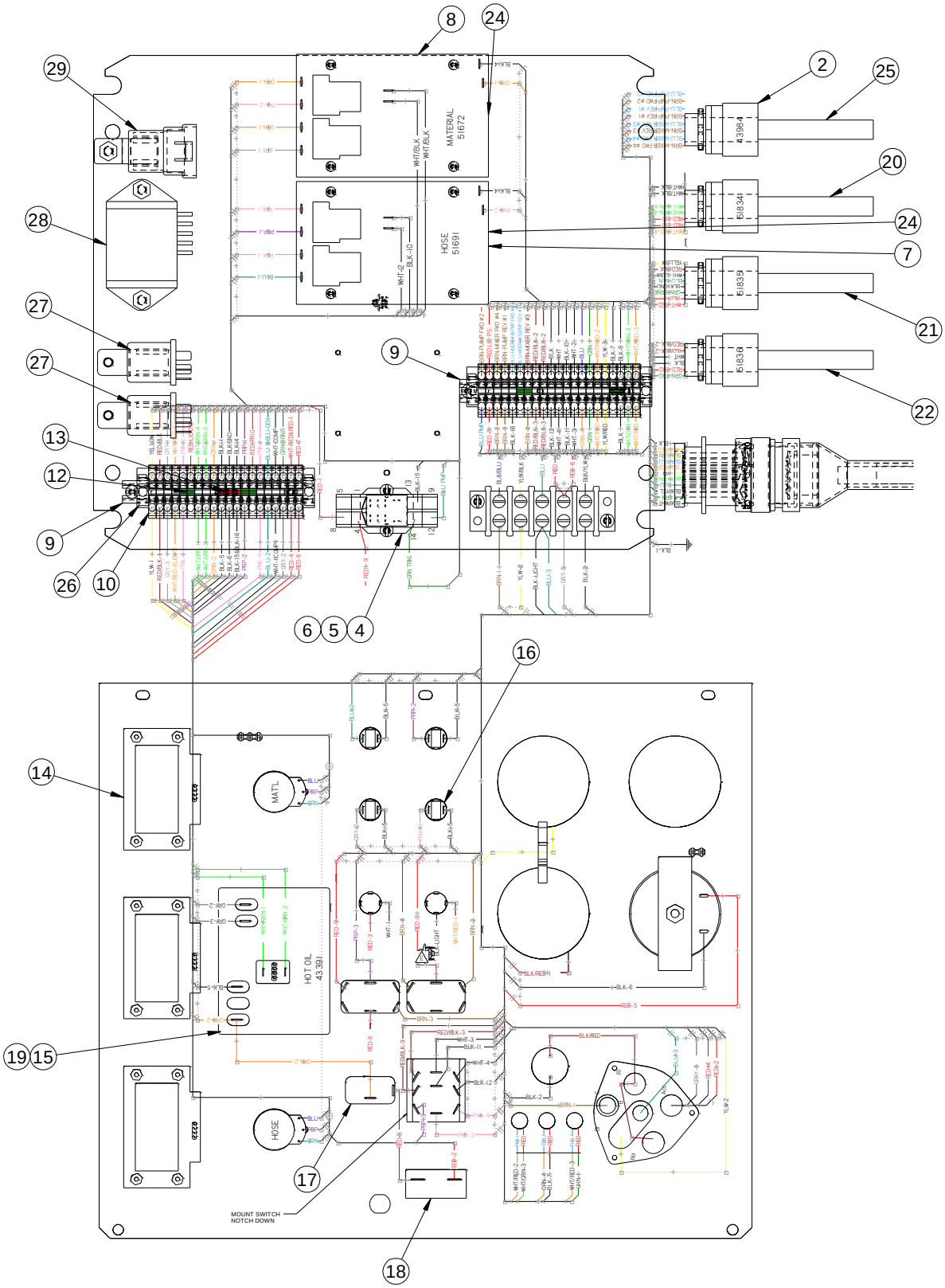

Fig. 9-10 Control Box Assembly 47202 - 46200EB

Chapter 9 Illustrated Parts List

FIG.	ITEM	PART NO.	DESCRIPTION	QTY.
Fig. 9-10	1	45595	ENCLOSURE (NOT SHOWN)	1
	2	24024	CORD CONNECTOR	3
	3	50280	1/2” CONDUIT NUT	5
	4	51662	SOCKET, RELAY	1
	5	51661	RELAY	1
	6	51663	HOLD DOWN SPRING	1
	7	51691	TEMPERATURE CONTROLLER, 400°/325°	1
	8	51672	TEMPERATURE CONTROLLER, 400°/275°	1
	9	51803	MOUNTING RAIL	2
	10	51802	END BRACKET	2
	11	51800	FEED THROUGH TERMINAL	40
	12	51801	JUMPER, 2-POLE	3
	13	51804	JUMPER, 3-POLE	1
	14	50251	READOUT, DIGITAL	3
	15	43391	TEMPERATURE CONTROLLER 150°-550°	1
	16	51651	LIGHT, 12VDC	4
	17	50719	SWITCH, TOGGLE	2
	18	51665	CIRCUIT BREAKER, 15 AMP	1
	19	50593	KNOB, TEMP CONTROL	3
	20	51834	CABLE ASSEMBLY, SENSOR	1
	21	51835	CABLE ASSEMBLY, POWER	1
	22	51836	CABLE ASSEMBLY, TRIGGER/SENSOR	1
	23	51684	RIBBON CABLE, 36” (NOT SHOWN)	2
	24	51670	SPACER, TEMPERATURE CONTRLLER	8
	25	43984	CABLE ASSEMBLY, VALVE	1
	26	51805	END BRACKET	4
	27	44979	RELAY, STARTER	2
	28	44980	TIMER	1
	29	51673	RELAY, NC	1

©2018 by Crafco, Inc. All Rights Reserved

Chapter 9 Illustrated Parts List

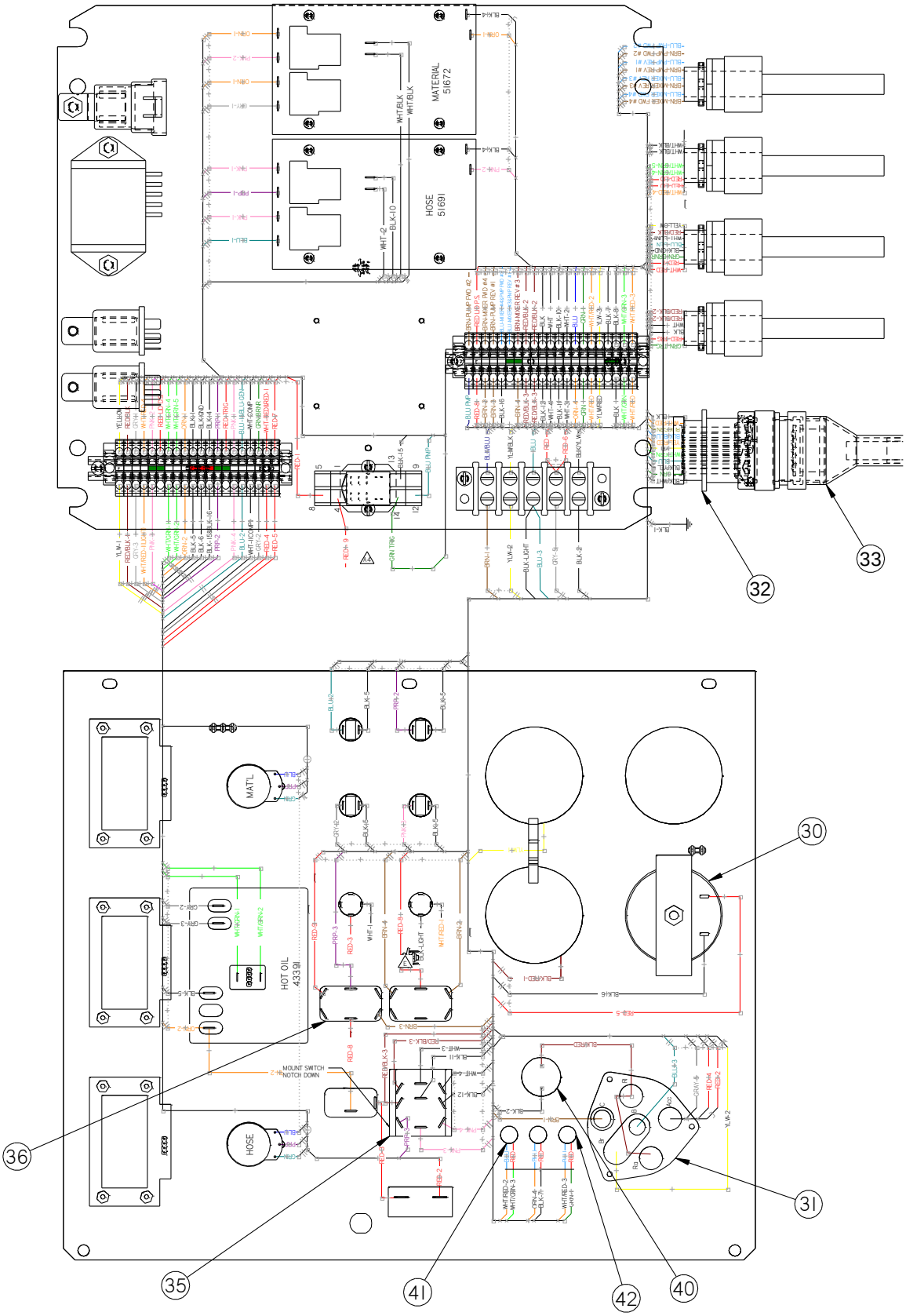

Fig. 9-11 Control Box Assembly 47202 - 46200EB

©2018 by Crafco, Inc. All Rights Reserved

Chapter 9 Illustrated Parts List

FIG.	ITEM	PART NO.	DESCRIPTION	QTY.
Fig. 9-11	30	24076	HOUR METER	1
	31	41994	IGNITION SWITCH	1
	32	45950	SOCKET, CONNECTOR	1
	33.	45970	WIRING HARNESS, EXTENSION	1
	34	51698	RIBBON CABLE, 5”	1
	35	51811	SWITCH, HOSE SELECTOR	1
	36	32522	SWITCH, PUMP	1
	37	44975	GAUGE, WATER TEMPERATURE (Not Shown)	OPT.
	38	44976	GAUGE, OIL PRESSURE (Not Shown)	OPT.
	39	44977	GAUGE, VOLT METER (Not Shown)	OPT.
	40	44987	RESISTANCE CONTROL	1
	41	44989	LIGHT, AMBER	2
	42	44988	LIGHT, RED	1

©2018 by Crafco, Inc. All Rights Reserved

9.7 Control Box Assembly 47201 – 46200SB

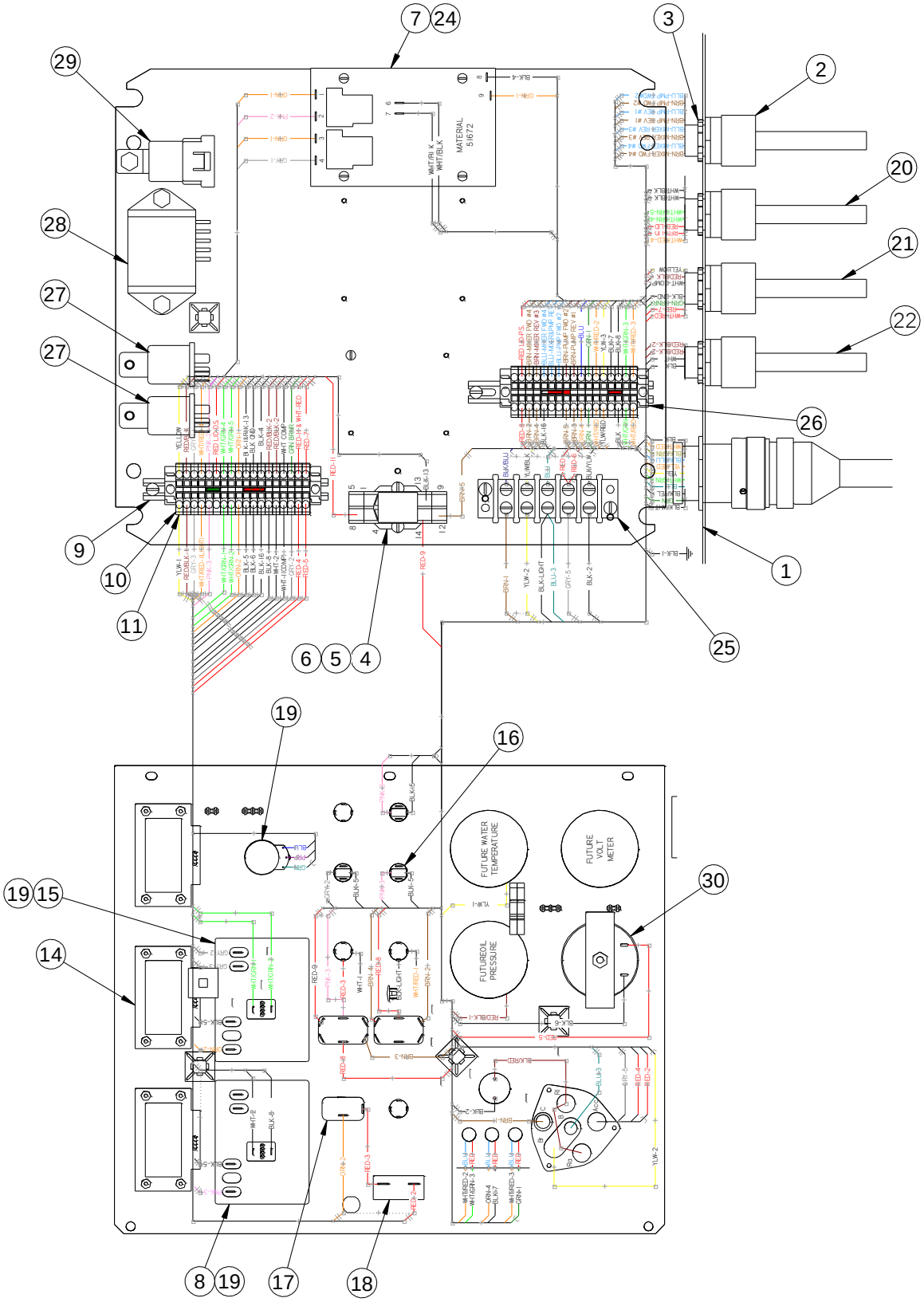

Fig. 9-12 Control Box Assembly 47201 - 46200SB

Chapter 9 Illustrated Parts List

FIG.	ITEM	PART NO.	DESCRIPTION	QTY.
Fig. 9-12	1	45595	ENCLOSURE (NOT SHOWN)	1
	2	24021	CORD CONNECTOR	3
	3	50280	1/2” CONDUIT NUT	5
	4	51662	SOCKET, RELAY	1
	5	51661	RELAY	1
	6	51663	HOLD DOWN SPRING	1
	7	51672	TEMPERATURE CONTROLLER, 400°/275°	1
	8	43397	TEMPERATURE CONTROLLER, 400°	1
	9	51803	MOUNTING RAIL	2
	10	51802	END PLATE	2
	11	51800	FEED THROUGH TERMINAL	33
	12	51801	JUMPER, 2-POLE	1
	13	51804	JUMPER, 3-POLE	2
	14	50251	READOUT, DIGITAL	3
	15	43391	TEMPERATURE CONTROLLER 150°-550°	1
	16	51651	LIGHT, 12VDC	3
	17	50719	SWITCH, TOGGLE	2
	18	51665	CIRCUIT BREAKER, 15 AMP	1
	19	50593	KNOB, TEMP CONTROL	3
	20	51834	CABLE ASSEMBLY, SENSOR	1
	21	51835	CABLE ASSEMBLY, POWER	1
	22	51836	CABLE ASSEMBLY, TRIGGER/SENSOR	1
	23	51684	RIBBON CABLE, 36” (NOT SHOWN)	1
	24	51670	SPACER, TEMPERATURE CONTROLLER	4
	25	44994	TERMINAL BLOCK 5-POLE	1
	26	51805	END BRACKET	4
	27	44979	RELAY, STARTER	2
	28	44980	TIMER	1
	29	51673	RELAY, NC	1
	30	24076	HOUR METER	1

©2018 by Crafco, Inc. All Rights Reserved

Chapter 9 Illustrated Parts List

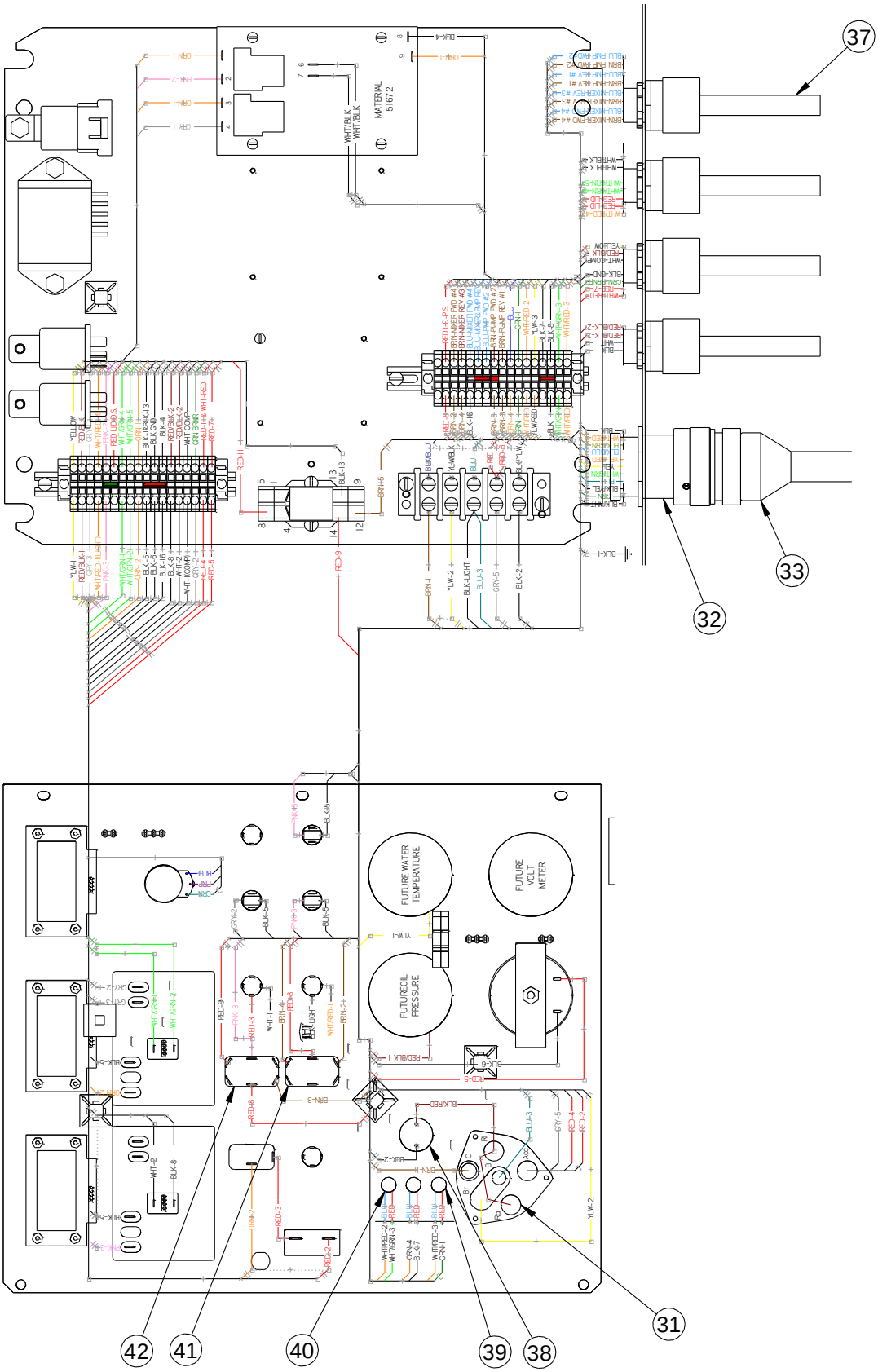

Fig. 9-13 Control Box Assembly 47201 - 46200SB

©2018 by Crafco, Inc. All Rights Reserved

Chapter 9 Illustrated Parts List

FIG.	ITEM	PART NO.	DESCRIPTION	QTY.
Fig. 9-13	31	44990	KEY AND TUMBLER	1
	31a	41994	IGNITION SWITCH W/O TUMBLER	1
	32	45950	SOCKET, CONNECTOR	1
	33	45970	WIRING HARNESS, EXTENSION	1
	34	51698	RIBBON CABLE, 5”	2
	35	44976	GAUGE, OIL PRESSURE	OPT.
	36	44977	GAUGE, VOLT METER	OPT.
	37	43984	CABLE ASSEMBLY, VALVE	1
	38	44987	RESISTANCE CONTROL	1
	39	44989	LIGHT, AMBER	1
	40	44988	LIGHT, RED	2
	41	51678	SWITCH, DPDT	2
	42	32522	SWITCH, PUMP	1

©2018 by Crafco, Inc. All Rights Reserved

9.8 Control Box Assembly 47210 – 47600EC100

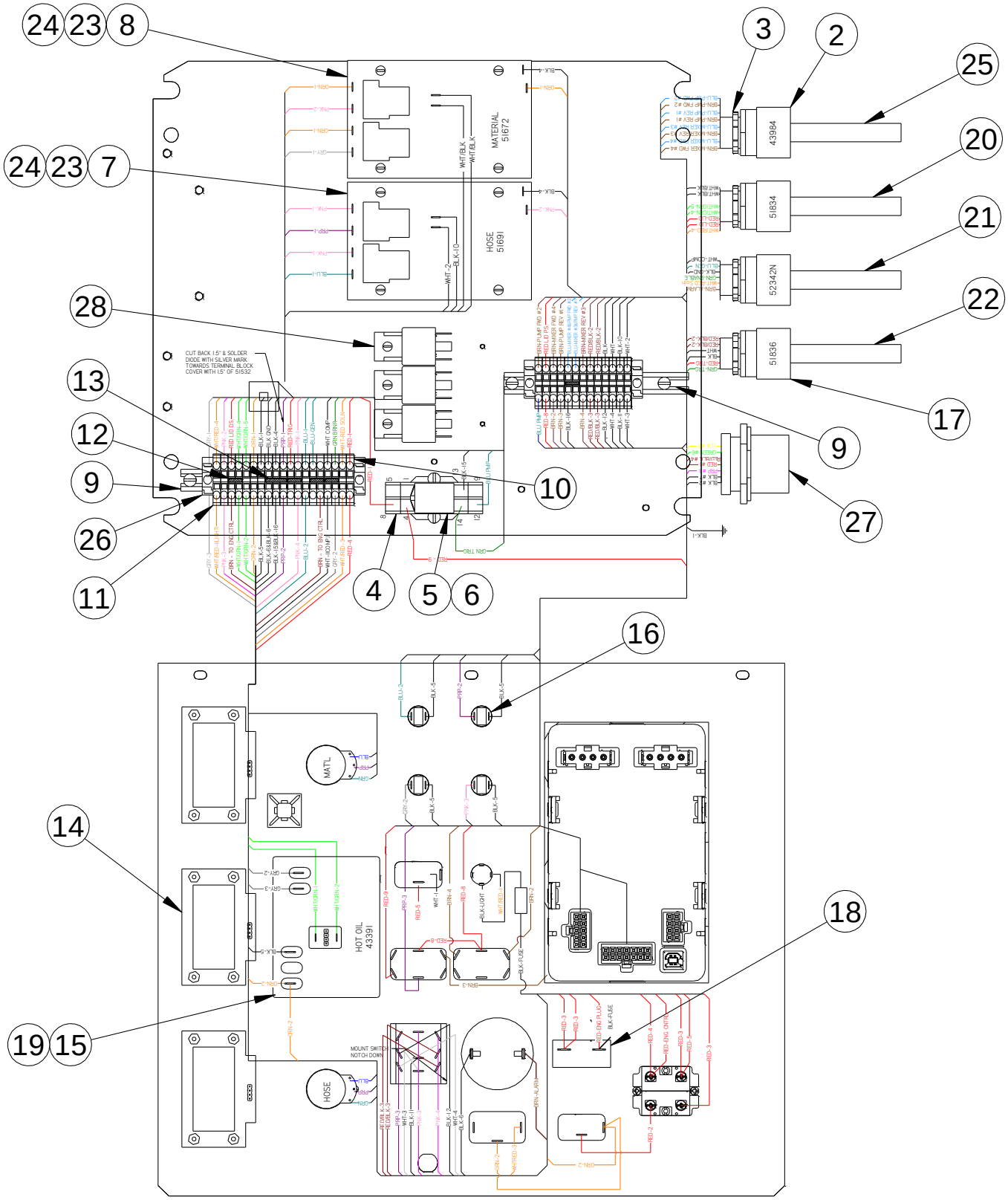

Fig. 9-14 Control Box Assembly 47210 – 47600EC100

Chapter 9 Illustrated Parts List

FIG.	ITEM	PART NO.	DESCRIPTION	QTY.
Fig. 9-14	1	47203	ENCLOSURE (NOT SHOWN)	1
	2	24024	CORD CONNECTOR	1
	3	50280	1/2” CONDUIT NUT	4
	4	51662	SOCKET, RELAY	1
	5	51661	RELAY	1
	6	51663	HOLD DOWN SPRING	1
	7	51691	TEMPERATURE CONTROLLER, 400°/325°	1
	8	51672	TEMPERATURE CONTROLLER, 400°/275°	1
	9	51803	MOUNTING RAIL	2
	10	51802	END PLATE	2
	11	51800	FEED THROUGH TERMINAL	33
	12	51801	JUMPER, 2-POLE	5
	13	51804	JUMPER, 3-POLE	1
	14	50251	READOUT, DIGITAL	3
	15	43391	TEMPERATURE CONTROLLER 150°-550°	1
	16	51651	LIGHT, 12VDC	4
	17	24021	CORD CONNECTOR	3
	18	51665	CIRCUIT BREAKER, 15 AMP	1
	19	50593	KNOB, TEMP CONTROL (NOT SHOWN)	3
	20	51834	CABLE ASSEMBLY, SENSOR	1
	21	52339	CABLE ASSEMBLY, ENGINE	1
	22	51836	CABLE ASSEMBLY, TRIGGER/SENSOR	1
	23	51684	RIBBON CABLE, 36” (NOT SHOWN)	2
	24	51670	SPACER, TEMPERATURE CONTROLLER	8
	25	43984	CABLE ASSEMBLY, VALVE	1
	26	51805	END BRACKET	4
	27	47211	HARNESS, CONTROLLER	1
	28	51673	RELAY	3

©2018 by Crafco, Inc. All Rights Reserved

Chapter 9 Illustrated Parts List

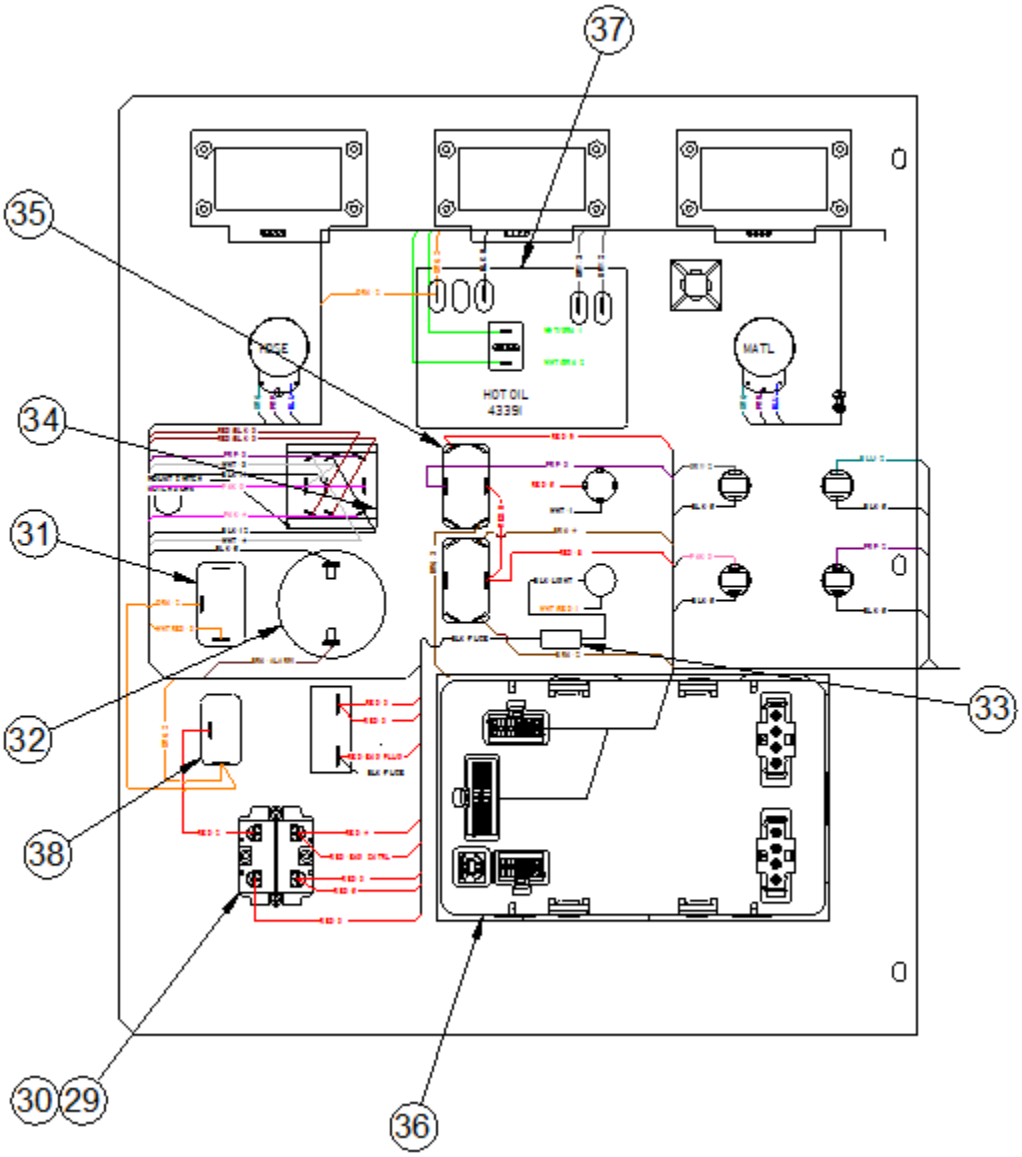

Fig. 9-15 Control Box Assembly 47210 – 47600EC100

©2018 by Crafco, Inc. All Rights Reserved

Chapter 9 Illustrated Parts List

FIG.	ITEM	PART NO.	DESCRIPTION	QTY.
Fig. 9-15	29	46239	SWITCH, ON/OFF, W/ KEY	1
	30	51852	CONTACT BLOCK, N.O.	2
	31	52338	SWITCH, SPST ON(ON)	1
	32	46494	ALARM, PIEZO	1
	33	32532	FUSE ASSY., STROBE LIGHT	1
	33a	32508	FUSE, 15A (INCLUDED IN 32532)	1
	34	51811	SWITCH, HOSE SELECTOR	1
	35	32522	SWITCH, DPDT ON-OFF-ON	1
	36	47209	CONTROLLER, ENGINE	1
	37	51698	CABLE, 5” RIBBON (NOT SHOWN)	1
	38	50719	SWITCH, TOGGLE SPST	1

©2018 by Crafco, Inc. All Rights Reserved

9.9 Control Box Assembly 47215 – 47600SC100

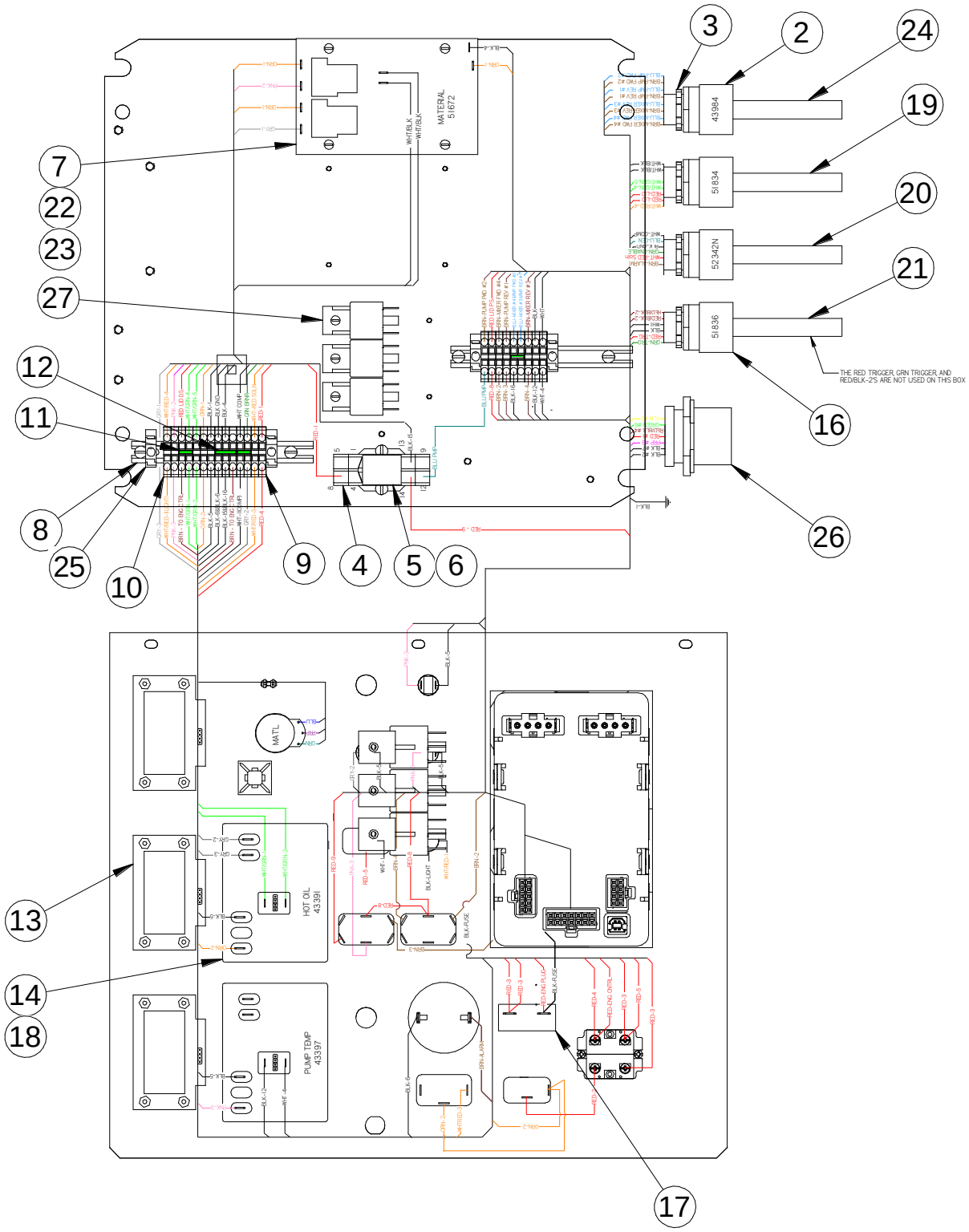

Fig. 9-16 Control Box Assembly 47215 – 47600SC100

Chapter 9 Illustrated Parts List

FIG.	ITEM	PART NO.	DESCRIPTION	QTY.
Fig. 9-16	1	47203	ENCLOSURE (NOT SHOWN)	1
	2	24024	CORD CONNECTOR	1
	3	50280	1/2” CONDUIT NUT	4
	4	51662	SOCKET, RELAY	1
	5	51661	RELAY	1
	6	51663	HOLD DOWN SPRING	1
	7	51672	TEMPERATURE CONTROLLER, 400°/275°	1
	8	51803	MOUNTING RAIL	2
	9	51802	END PLATE	2
	10	51800	FEED THROUGH TERMINAL	24
	11	51801	JUMPER, 2-POLE	3
	12	51804	JUMPER, 3-POLE	1
	13	50251	READOUT, DIGITAL	3
	14	43391	TEMPERATURE CONTROLLER 150°-550°	1
	15	51651	LIGHT, 12VDC	3
	16	24021	CORD CONNECTOR	3
	17	51665	CIRCUIT BREAKER, 15 AMP	1
	18	50593	KNOB, TEMP CONTROL (NOT SHOWN)	3
	19	51834	CABLE ASSEMBLY, SENSOR	1
	20	52339	CABLE ASSEMBLY, ENGINE	1
	21	51836	CABLE ASSEMBLY, TRIGGER/SENSOR	1
	22	51684	RIBBON CABLE, 36” (NOT SHOWN)	1
	23	51670	SPACER, TEMPERATURE CONTROLLER	4
	24	43984	CABLE ASSEMBLY, VALVE	1
	25	51805	END BRACKET	4
	26	47211	HARNESS, CONTROLLER	1
	27	51673	RELAY	3

©2018 by Crafco, Inc. All Rights Reserved

Chapter 9 Illustrated Parts List

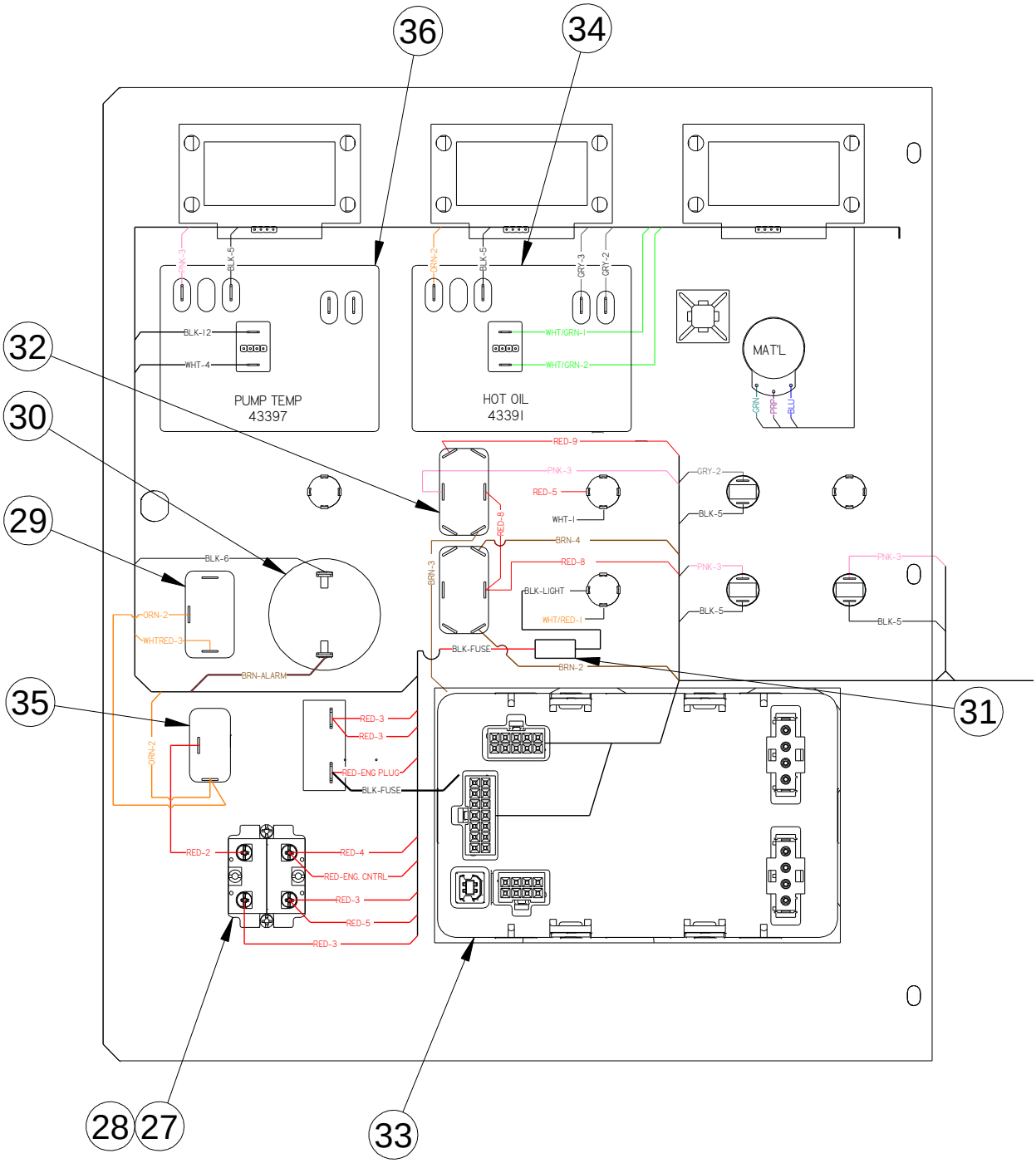

Fig. 9-17 Control Box Assembly 47215 – 47600SC100

Chapter 9 Illustrated Parts List

FIG.	ITEM	PART NO.	DESCRIPTION	QTY.
Fig. 9-17	27	46239	SWITCH, ON/OFF	1
	28	51852	CONTACT BLOCK, N.O.	2
	29	52338	SWITCH, SPST ON(ON)	1
	30	46494	ALARM, PIEZO	1
	31	32532	FUSE ASSY., STROBE LIGHT	1
	31a	32508	FUSE, 15A (INCLUDED IN 32532)	1
	32	32522	SWITCH, DPDT ON-OFF-ON	1
	33	47209	CONTROLLER, ENGINE	1
	34	51698	CABLE, 5” RIBBON (NOT SHOWN)	2
	35	50719	SWITCH, TOGGLE SPST	1
	36	43397	TEMPERATURE CONTROLLER 100° - 400°	1

©2018 by Crafco, Inc. All Rights Reserved

9.10 Engine Assembly – Non Compressor

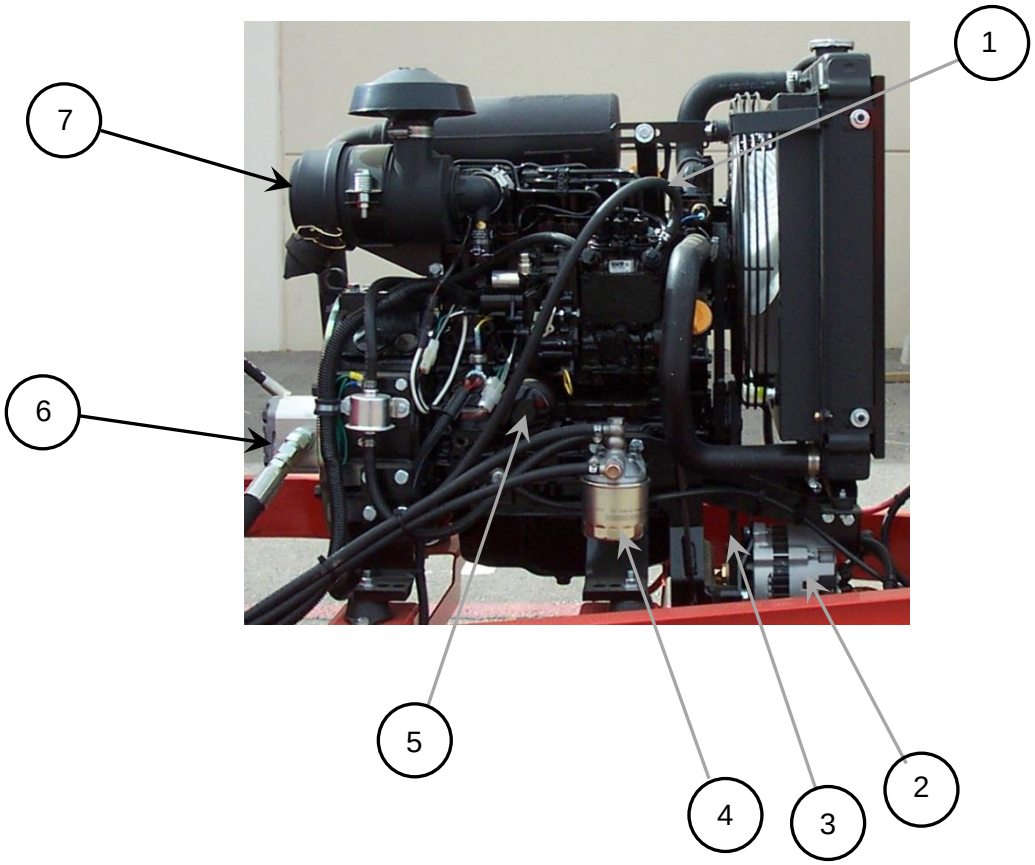

Fig. 9-18 Engine Assembly - 46200EB, 46200SB

FIG.	ITEM	PART NO.	DESCRIPTION	QTY.
Fig. 9-18	1	47103	27.5 HP ENGINE W/ GENERATOR – 46200EB	1
	1	47100	27.5 HP ENGINE NO GENERATOR – 46200SB	1
	2	43612	GENERATOR, 24VAC (46200EB ONLY)	1
	3	45748	BELT, DRIVE – GEN. (46200EB ONLY)	1
	4	41867	FUEL FILTER	1
	5	45389	OIL FILTER	1
	6	45439	HYDRAULIC PUMP	1
	7	45391	AIR FILTER ELEMENT	1

©2018 by Crafco, Inc. All Rights Reserved

This page left blank intentionally

9.11 Engine Assembly – 47600SC100

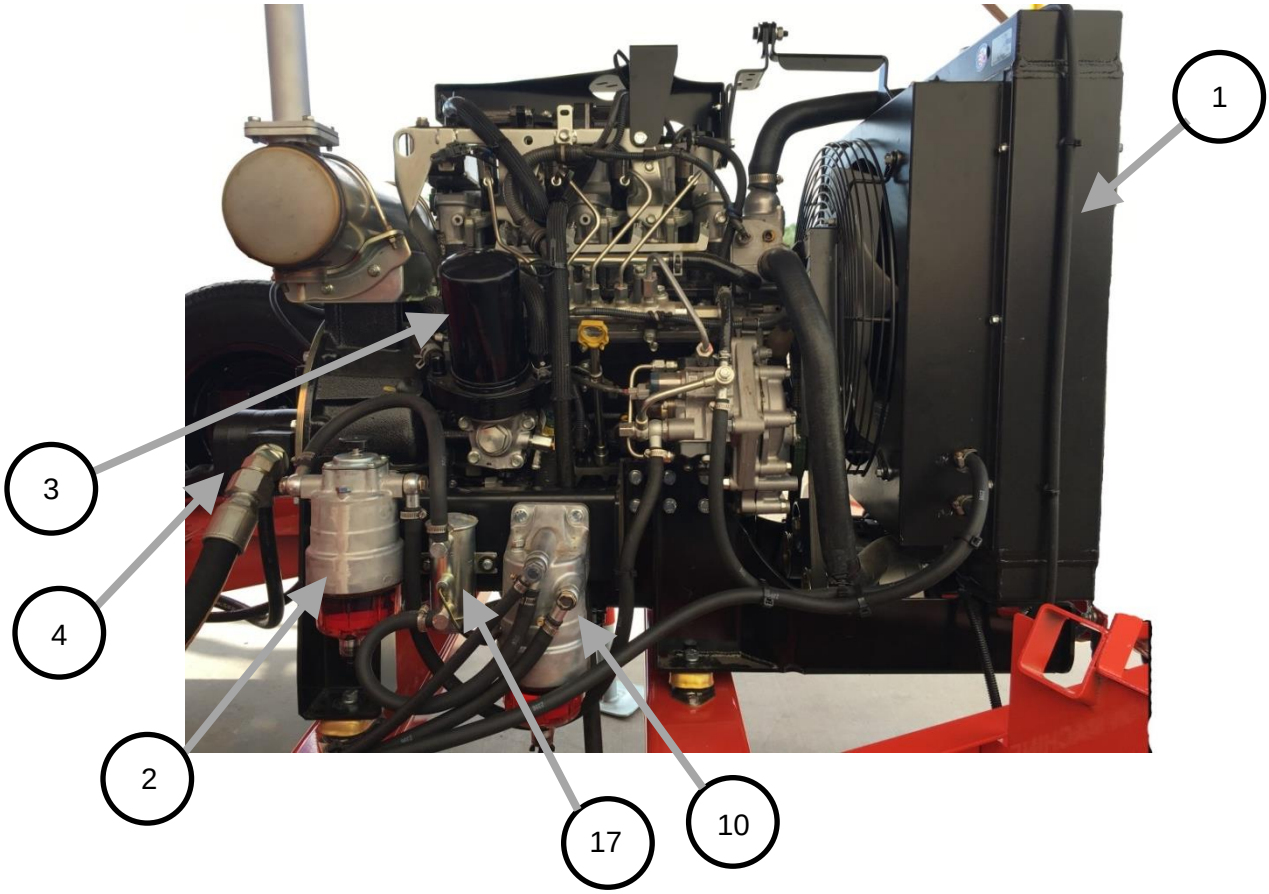

Fig. 9-19 Engine Assembly – 47600SC100

©2018 by Crafco, Inc. All Rights Reserved

Chapter 9 Illustrated Parts List

FIG.	ITEM	PART NO.	DESCRIPTION	QTY.
Fig. 9-19	1	47110	ENGINE, 4LE2T – NO GEN, STD HOSE	1
	2	47167N	FUEL FILTER	1
	3	47168N	OIL FILTER	1
	4	45491N	HYDRAULIC PUMP	1
	5	47169N	AIR FILTER ELEMENT	1
	6	47173N	WORKSHOP MANUAL	OPT.
	7	47171N	MANUAL, PARTS	OPT.
	8	47172N	OWNERS MANUAL	1
	9	47175N	RESTRICTION INDICATOR (Not Shown)	1
	10	47176N	FILTER, FUEL PRE (Not Shown)	1
	11	47177N	BELT, ENGINE FAN (Not Shown)	1
	12	47178N	CAP, RAIN (Not Shown)	1
	13	47179N	STARTER (Not Shown)	1
	14	47180N	ALTERNATOR, ENGINE (Not Shown)	1
	15	47181N	THERMOSTAT (Not Shown)	1
	16	47182N	PUMP, WATER (Not Shown)	1
	17	47185N	FUEL PUMP	1

©2018 by Crafco, Inc. All Rights Reserved

9.12 Engine Assembly – 47600EC100

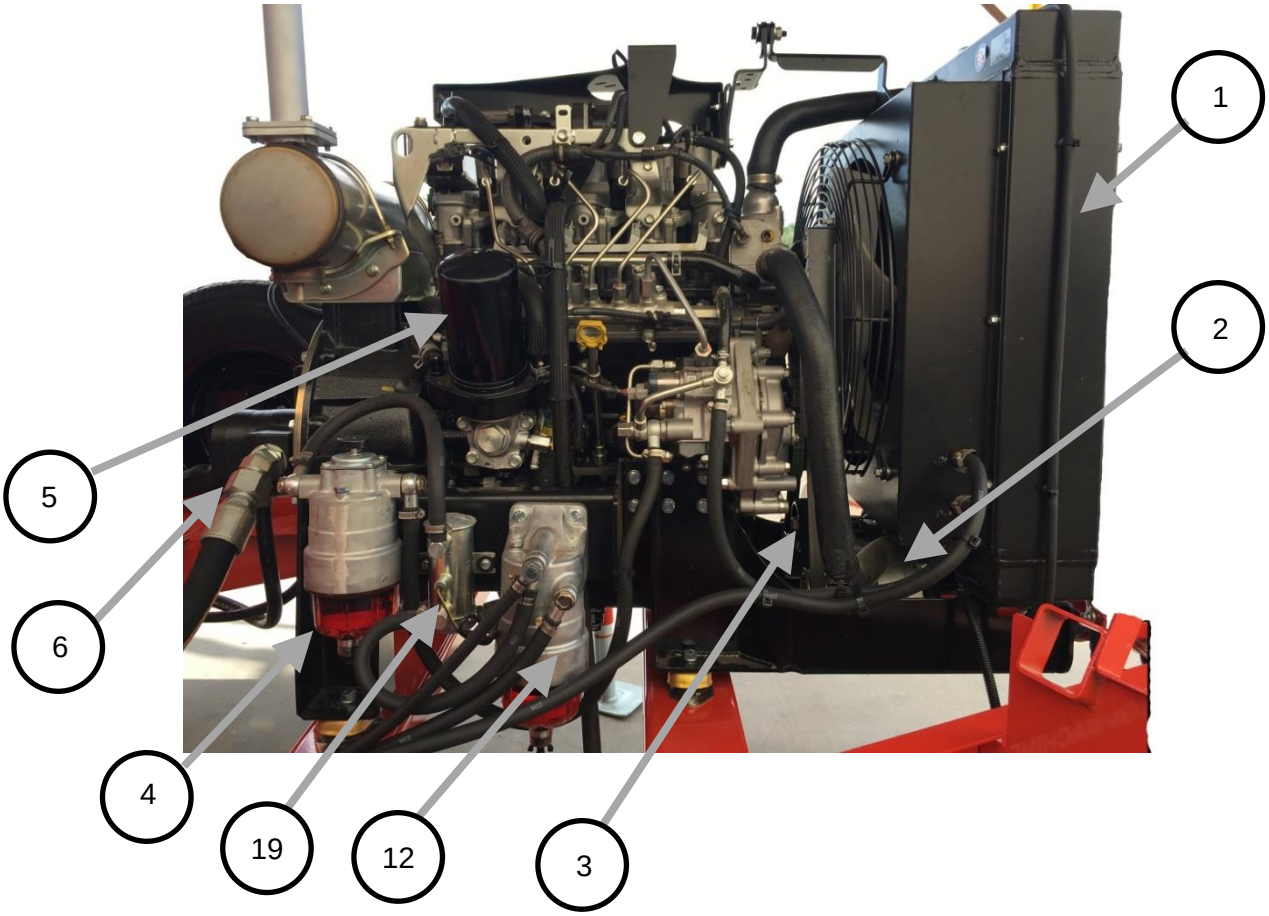

Fig. 9-20 Engine Assembly – 47600EC100

©2018 by Crafco, Inc. All Rights Reserved

Chapter 9 Illustrated Parts List

FIG.	ITEM	PART NO.	DESCRIPTION	QTY.
Fig. 9-20	1	47111N	ENGINE, 4LE2T – SINGLE. GEN, ELEC HOSE	1
	2	46322	GENERATOR, 24VAC	1
	3	47183N	BELT, DRIVE – GENERATOR	1
	3a	47170N	TENSIONER, BELT (NOT SHOWN)	1
	4	47167N	FUEL FILTER	1
	5	47168N	OIL FILTER	1
	6	45491N	HYDRAULIC PUMP	1
	7	47169N	AIR FILTER ELEMENT	1
	8	47173N	WORKSHOP MANUAL	OPT.
	9	47171N	MANUAL, PARTS	OPT.
	10	47172N	OWNERS MANUAL	1
	11	47175N	RESTRICTION INDICATOR (Not Shown)	1
	12	47176N	FILTER, FUEL PRE (Not Shown)	1
	13	47177N	BELT, ENGINE FAN (Not Shown)	1
	14	47178N	CAP, RAIN (Not Shown)	1
	15	47179N	STARTER (Not Shown)	1
	16	47180N	ALTERNATOR, ENGINE (Not Shown)	1
	17	47181N	THERMOSTAT (Not Shown)	1
	18	47182N	PUMP, WATER (Not Shown)	1
	19	47185N	FUEL PUMP	1

©2018 by Crafco, Inc. All Rights Reserved

9.13 Material Flow Control Assembly

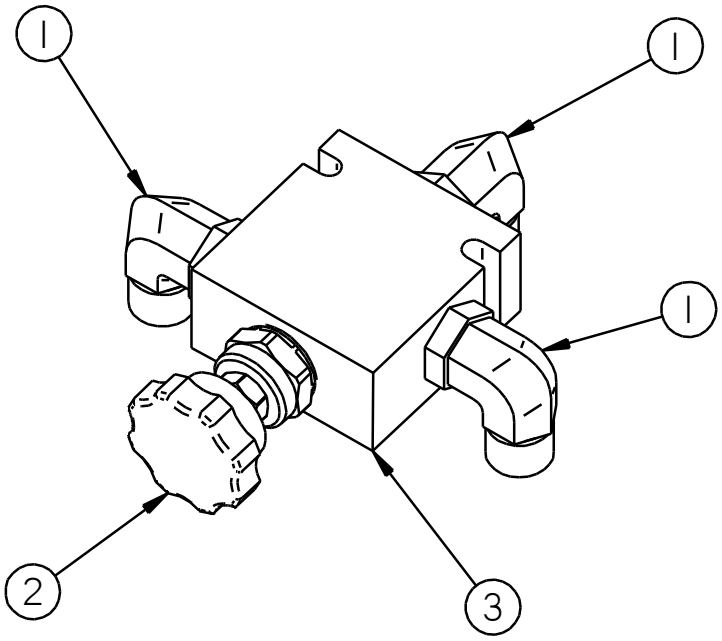

Fig. 9-21 Material Flow Control Assembly

FIG.	ITEM	PART NO.	DESCRIPTION	QTY.
Fig. 9-21	1	29896	3/8” TUBE X 1/2” O-RING ELBOW	3
	2	46077	KNOB ONLY	1
	3	46060	HYDRAULIC FLOW CONTROL (NO FITTINGS)	1

©2018 by Crafco, Inc. All Rights Reserved

9.14 Hydraulic Compressor Valve Assembly

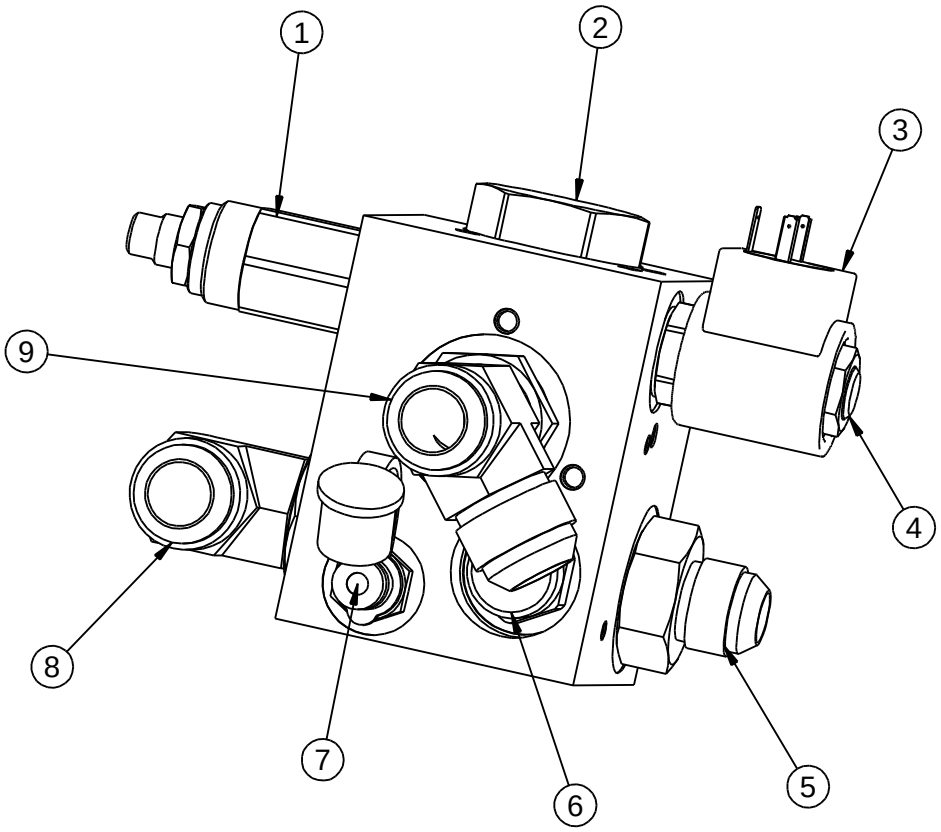

Fig. 9-22 Compressor Valve Assembly

FIG.	ITEM	PART NO.	DESCRIPTION	QTY.
Fig. 9-22	1	45417	VALVE, RELIEF	1
	2	45429	VALVE, LOGIC RELIEF	1
	3	45426	COIL, SOLENOID VALVE	1
	4	45424	VALVE, SOLENOID	1
	5	-	FITTING, #12 ORB X #10 JIC STRAIGHT	2
	6	45614N	FLOW CONTROL, PRESSURE COMP.	1
	7	45414	FITTING, TEST POINT	1
	8	45413	CAP, DUST	1
	9	-	TEE, #12 ORB X #12 JIC RUN	1

©2018 by Crafco, Inc. All Rights Reserved

9.15 Diesel Burner Assembly

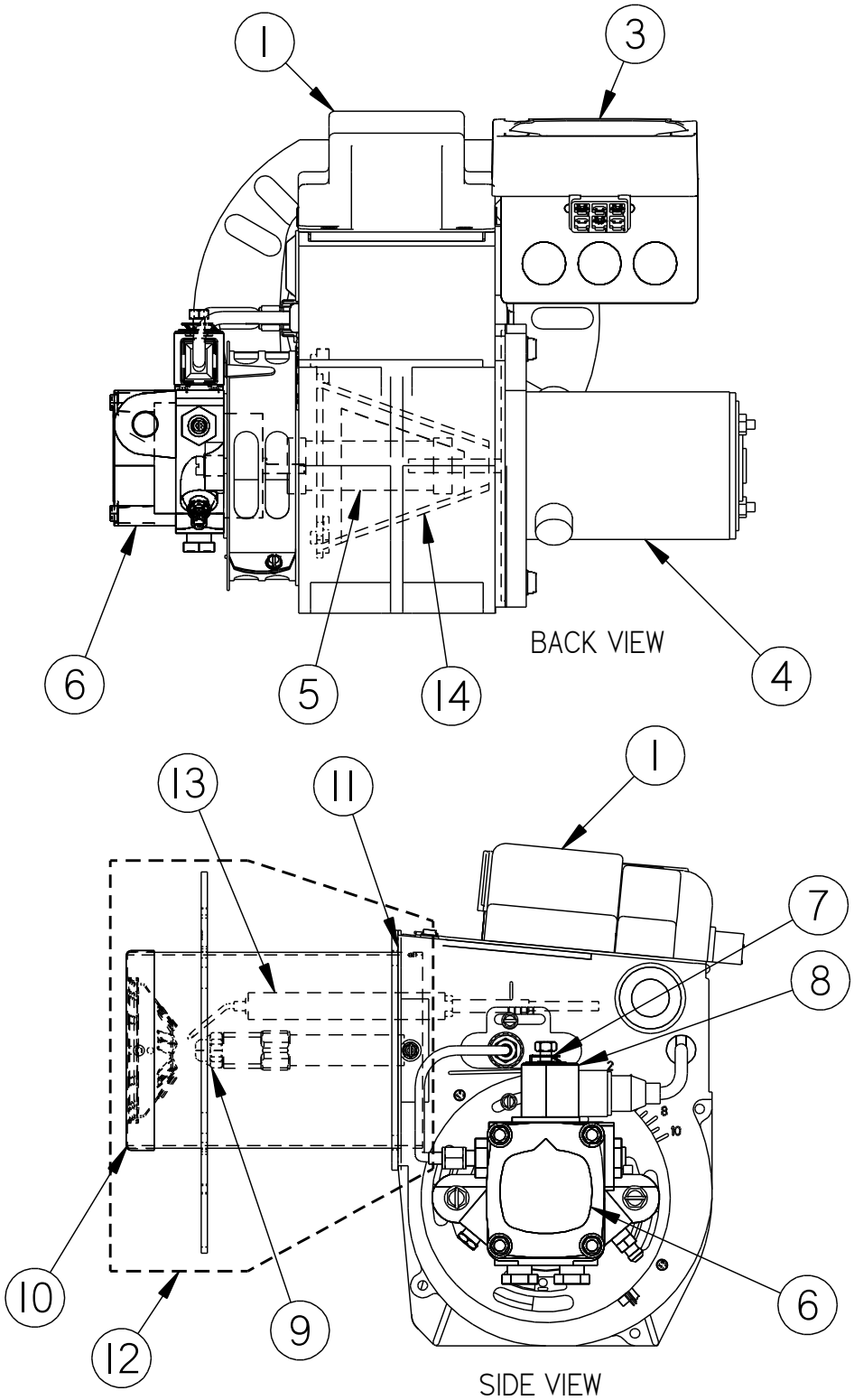

Fig. 9-23 Diesel Burner

Chapter 9 Illustrated Parts List

FIG.	ITEM	PART NO.	DESCRIPTION	QTY.
Fig. 9-23	1	41949	IGNITION TRANSFORMER	1
	2	41870	CAD EYE (NOT SHOWN)	1
	3	42335	DC CONTROLLER	1
	4	41890	BLOWER MOTOR	1
	5	41970	COUPLING, FUEL PUMP	1
	6	41892	PUMP, FUEL	1
	7	41932	VALVE STEM, FUEL SOLENOID	1
	8	41933	COIL, FUEL SOLENOID	1
	9	41881	NOZZLE	1
	10	41953N	STD HEAD, F22, BURNER	1
	11	41964N	GASKET, AIR TUBE TO HOUSING	1
	12	46381N	AIR TUBE W/ HEAD & ELECTRODE MOUNT	1
	13	41993	ELECTRODE ASSY (COMES WITH 2)	1
	14	41966N	AIR GUIDE, BURNER	1

©2018 by Crafco, Inc. All Rights Reserved

9.16 Material Pump Assembly

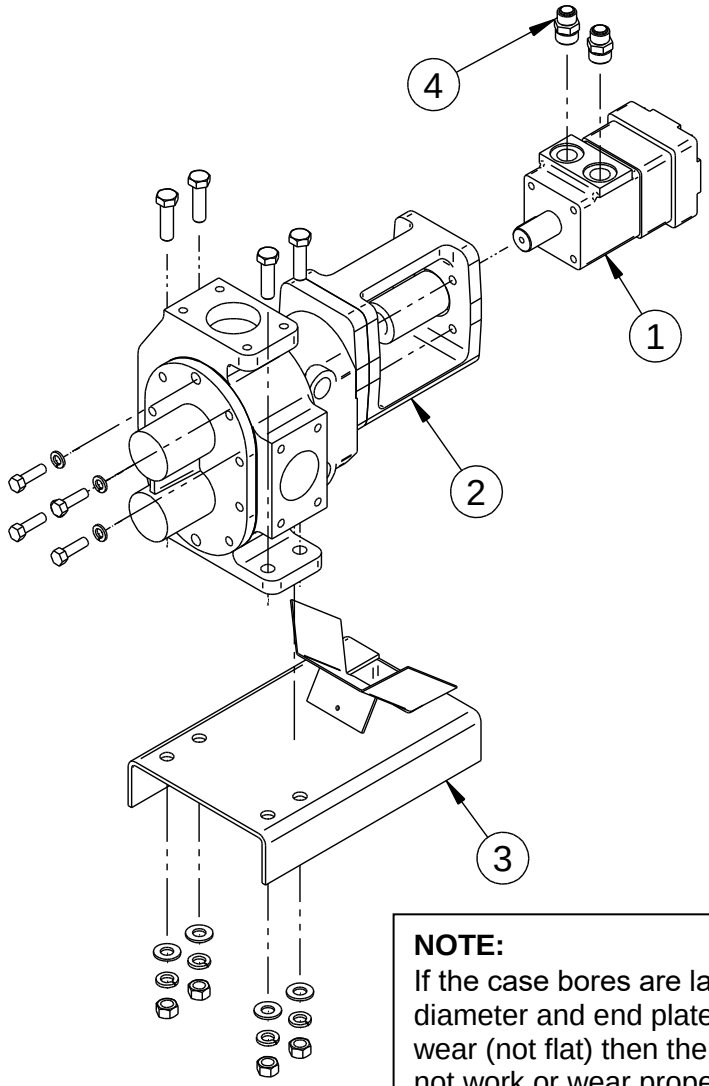

NOTE:
If the case bores are larger than 3.851" diameter and end plates have any wear (not flat) then the rebuild kit may not work or wear properly.

Fig. 9-24 Material Pump Assembly

FIG.	ITEM	PART NO.	DESCRIPTION	QTY.
Fig. 9-24	1	22027	MOTOR, HYDRAULIC	1
	2	42070	PUMP ASSEMBLY, JACKETED	1
	2a	29990S	PACKING RING (SET OF 7)	1
	3	43129	MOUNTING PLATE ASSEMBLY	1
	4	29913	FITTING, #10 ORB X #6 JIC STRAIGHT	2
	5	42073N	PUMP REBUILD KIT (SEE NOTE)	-

©2018 by Crafco, Inc. All Rights Reserved

This page left blank intentionally

9.17 Air Compressor Assembly

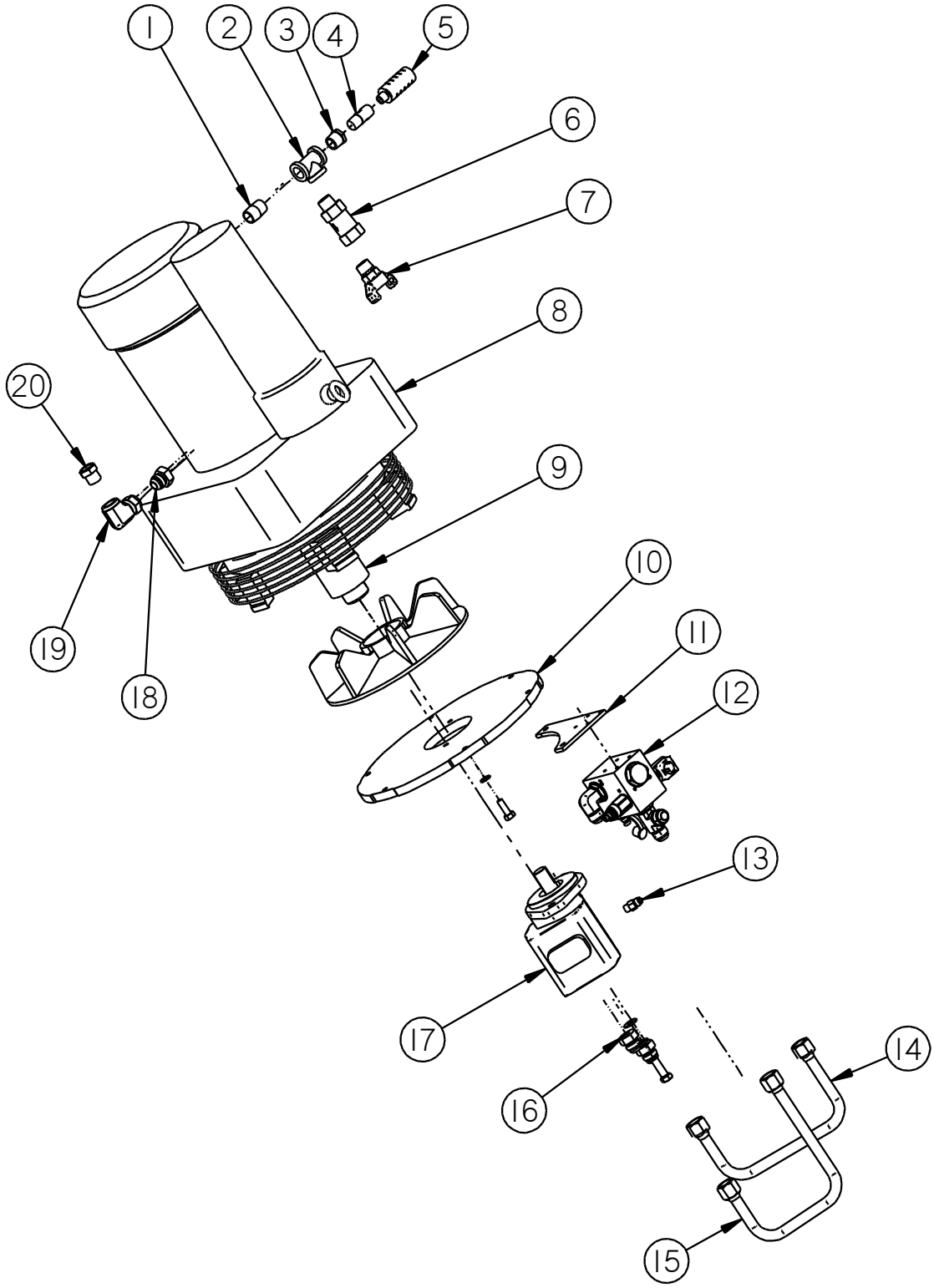

Fig. 9-25 Compressor Assembly

©2018 by Crafco, Inc. All Rights Reserved

Chapter 9 Illustrated Parts List

FIG.	ITEM	PART NO.	DESCRIPTION	QTY.
Fig. 9-25	1	28004	NIPPLE, 3/4” NPT GALVANIZED CLOSE	1
	2	28254	TEE, 3/4” NPT GALVANIZED PIPE	1
	3	28355	BUSHING, 3/4” NPT X 1/2” NPT GALVANIZED	1
	4	45564	NIPPLE, RESTRICTOR	1
	5	50267	MUFFLER, AIR	1
	6	47648N	PRESSURE SAFETY VALVE ¾”	1
	7	47488N	FITTING, 3/4” NPT AIR HOSE	2
	8	47480N	COMPRESSOR ASSY, ROTARY VANE, 100CFM	1
	9	45347	SHAFT, COMPRESSOR DRIVE	1
	10	45346	PLATE, MOTOR ADAPTER	1
	11	45327	MOUNTING PLATE, VALVE	1
	12	45425	VALVE, HYDRAULIC	1
	13	29881	MALE CONNECTOR 3/8MJ X 1/4MP	1
	14	45476	RETURN LINE, COMPRESSOR	1
	15	45475	SUPPLY LINE, COMPRESSOR	1
	16	29819	FITTING, #12 ORB X #12 JIC STRAIGHT	1
	17	43874	MOTOR, HYDRAULIC	1
	18	45326	FITTING, #12 BSPP X #12 JIC STRAIGHT	1
	19	29773	ADAPTER, #12 JIC X 3/4 FPT 90°	1
	20	NA	SITE GUAGE - 45320	
	N/A	47484N	SWITCH, TEMP 130C, COMPRESSOR	1

©2018 by Crafco, Inc. All Rights Reserved

9.18 High Output Air Lance Assembly

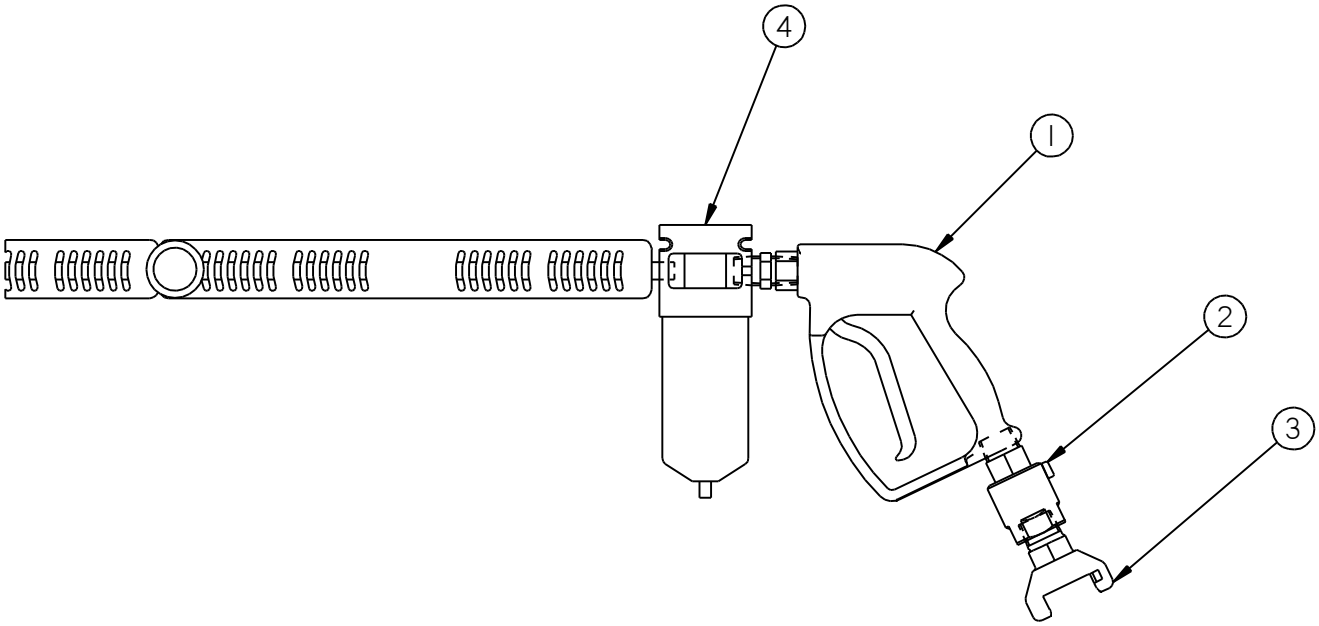

Fig. 9-26 High Output Air Lance Assembly

FIG.	ITEM	PART NO.	DESCRIPTION	QTY.
Fig. 9-26	1	47483N	LANCE, AIR, HIGH OUTPUT WITH SWVL & CPLR	1
	2	70250	3/4” SWIVEL	1
	3	47488N	FITTING, 3/4” AIR HOSE	1
	4	47491N	OPTIONAL WATER SEPARATOR KIT	1
	N/A	47482N	3/4” X 50 FT AIR HOSE	1

©2018 by Crafco, Inc. All Rights Reserved

This page left blank intentionally

9.19 Wand Assembly

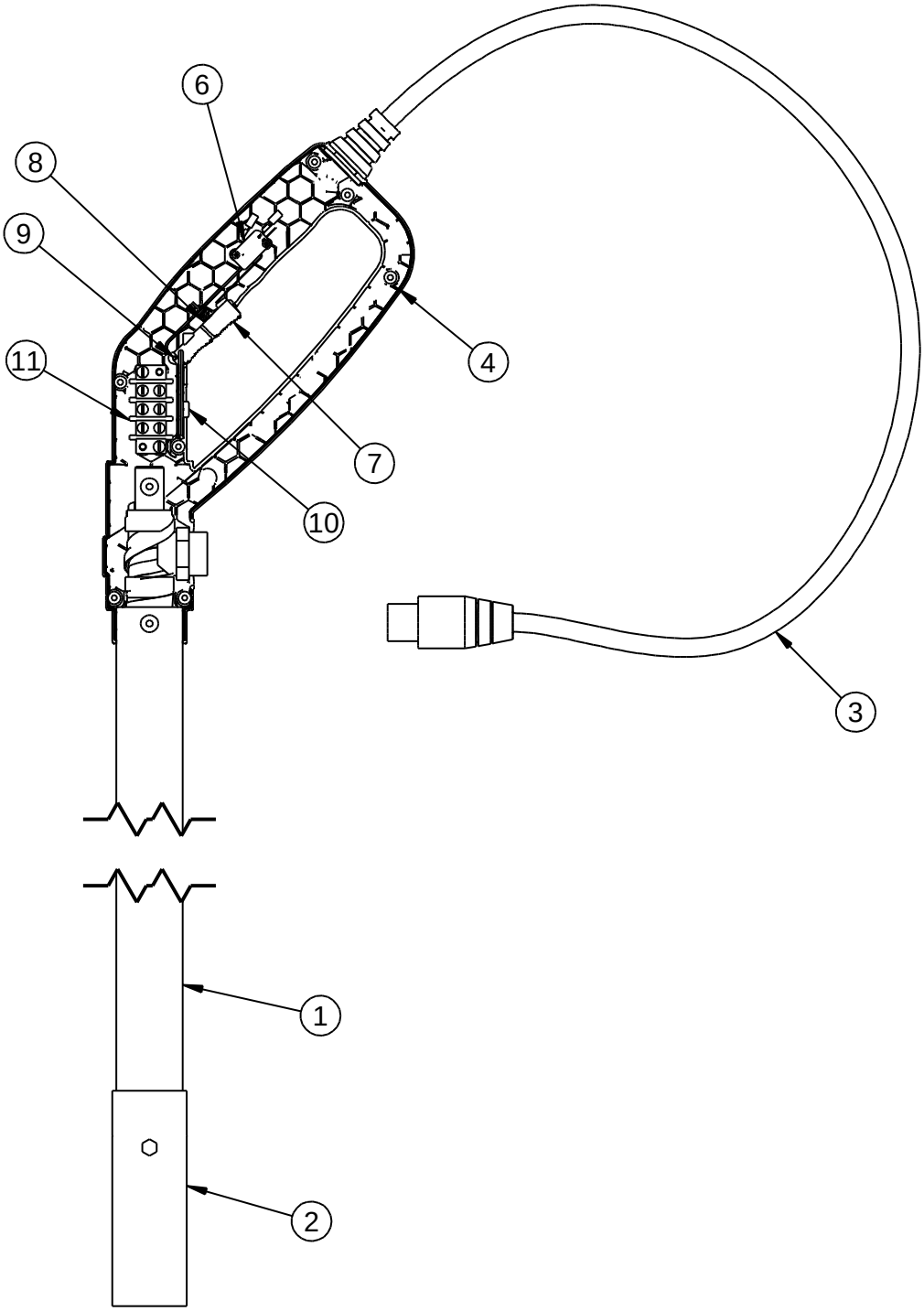

Fig. 9-27 Wand Assembly

©2018 by Crafco, Inc. All Rights Reserved

Chapter 9 Illustrated Parts List

FIG.	ITEM	PART NO.	DESCRIPTION	QTY.
Fig. 9-27	1	52204	COVER, WAND	1
	2	50278	TIP GUARD, LONG CLAMP ON	1
	3	52206	CORD ASSEMBLY	1
	4	52201	HANDLE, WAND – RIGHT (W/INSERTS)	1
	5	52201L	HANDLE, WAND – LEFT (NOT SHOWN)	1
	6	52208	SWITCH, WAND	1
	7	52202	ACTUATOR	1
	8	52207	SPRING, ACTUATOR	1
	9	52209	PIN, ACTUATOR	1
	10	52203	LOCK, TRIGGER	1
	11	51656	TERMINAL STRIP	1

©2018 by Crafco, Inc. All Rights Reserved

9.20 Diesel Fuel Line Schematic – Non-Compressor

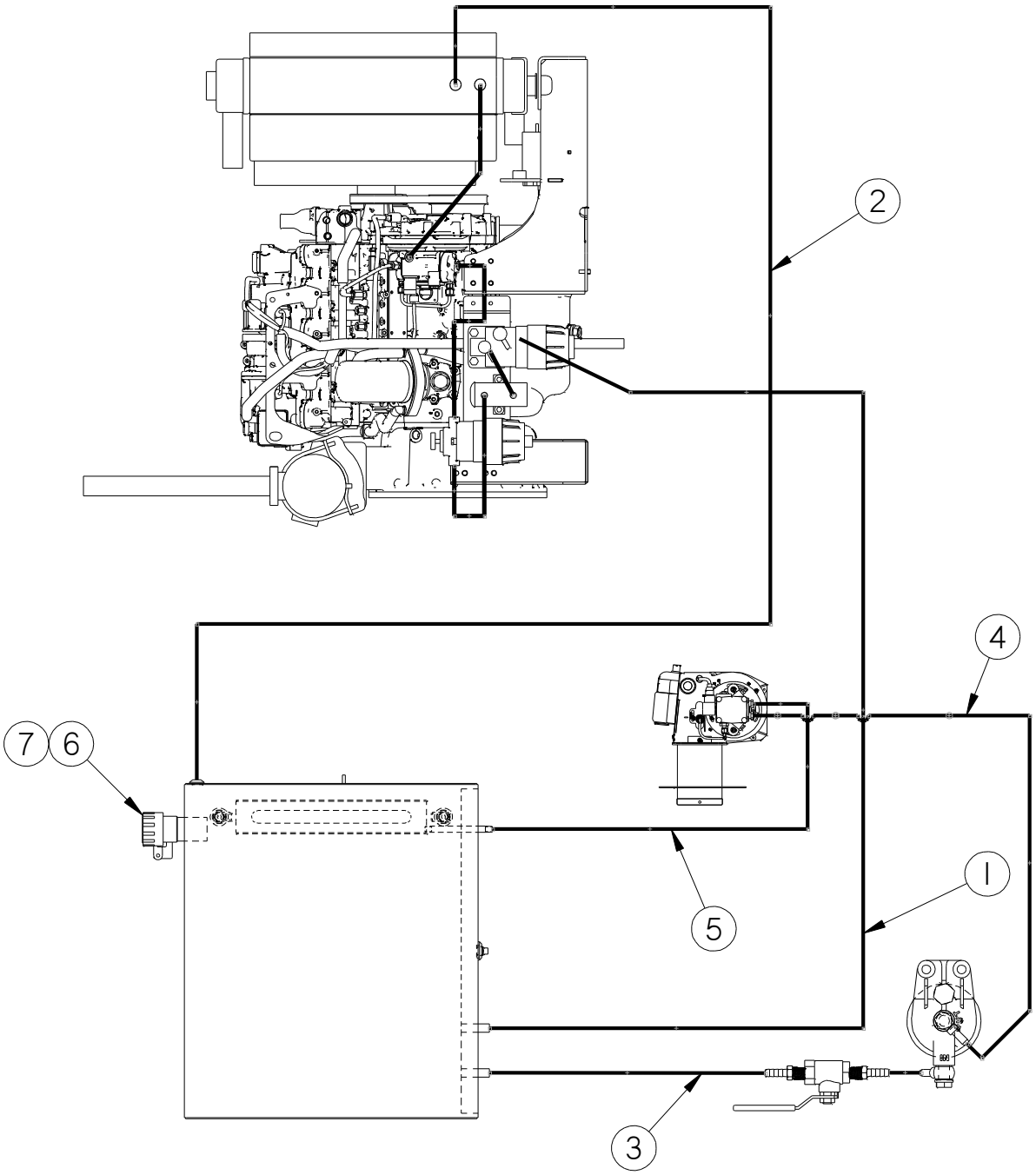

Fig. 9-28 Diesel Fuel Line Schematic – Non-Compressor

©2018 by Crafco, Inc. All Rights Reserved

Chapter 9 Illustrated Parts List

FIG.	ITEM	PART NO.	DESCRIPTION	QTY.
Fig. 9-29	**1. DIESEL FUEL TANK TO ENGINE FUEL FILTER "IN" PORT**			
		26782	FITTING, 1/4 MPT X 5/16 JIC ELBOW	1
		26767	FITTING, #6 HOSE PUSH-ON	1
		47662N	HOSE, 5/16 x 72” FUEL LINE	1
		26080	CLAMP, GEAR	2
		-	BANJO FITTING	REF.
	2. ENGINE RETURN LINE TO DIESEL FUEL TANK			
		47663N	HOSE, 5/16 x 107” FUEL LINE	1
		26767	FITTING, #6 HOSE PUSH-ON	1
		26782	FITTING, 1/4 MPT X 5/16 JIC ELBOW	1
		26080	CLAMP, GEAR	2
	3. DIESEL FUEL TANK TO BURNER FUEL FILTER			
		26782	FITTING, 1/4” MPT X 5/16 JIC ELBOW	1
		26767	FITTING, #5 HOSE PUSH-ON	1
		29650N	HOSE, 5/16 x 55” FUEL LINE	1
		29984	HOSE BARB, 1/4MPT X 5/16 HOSE	1
		29195	BALL VALVE, 1/4 NPT	1
		29984	HOSE BARB, 1/4MPT X 5/16 HOSE	1
		29648N	HOSE ASSEMBLY, 5/16 X 10”	1
		47345N	FILTER ASSEMBLY	1
	4. BURNER FUEL FILTER TO BURNER INLET			
		29664N	HOSE ASSEMBLY, 5/16 X 22”	1
		26767	FITTING, #5 HOSE PUSH-ON	1
		26756N	ADAPTER, 5/16 JIC X 1/4NPT	1
	5. BURNER RETURN LINE TO DIESEL TANK			
		26756N	ADAPTER, 5/16 JIC X 1/4NPT	1
		26767	FITTING, #5 HOSE PUSH-ON	1
		29651N	HOSE ASSEMBLY, 5/16 X 65.5”	1
		26767	FITTING, #5 HOSE PUSH-ON	1
		47497	FITTING, 1/4” FPT X 5/16 JIC ELBOW	1
	6	43758N	FILLER CAP, RPLCMNT, FUEL-HYD TANKS	1
	7	43723N	GASKET, NARROW STYLE, FOR FILLER CAP	1

©2018 by Crafco, Inc. All Rights Reserved

9.21 Diesel Fuel Line Schematic – Compressors

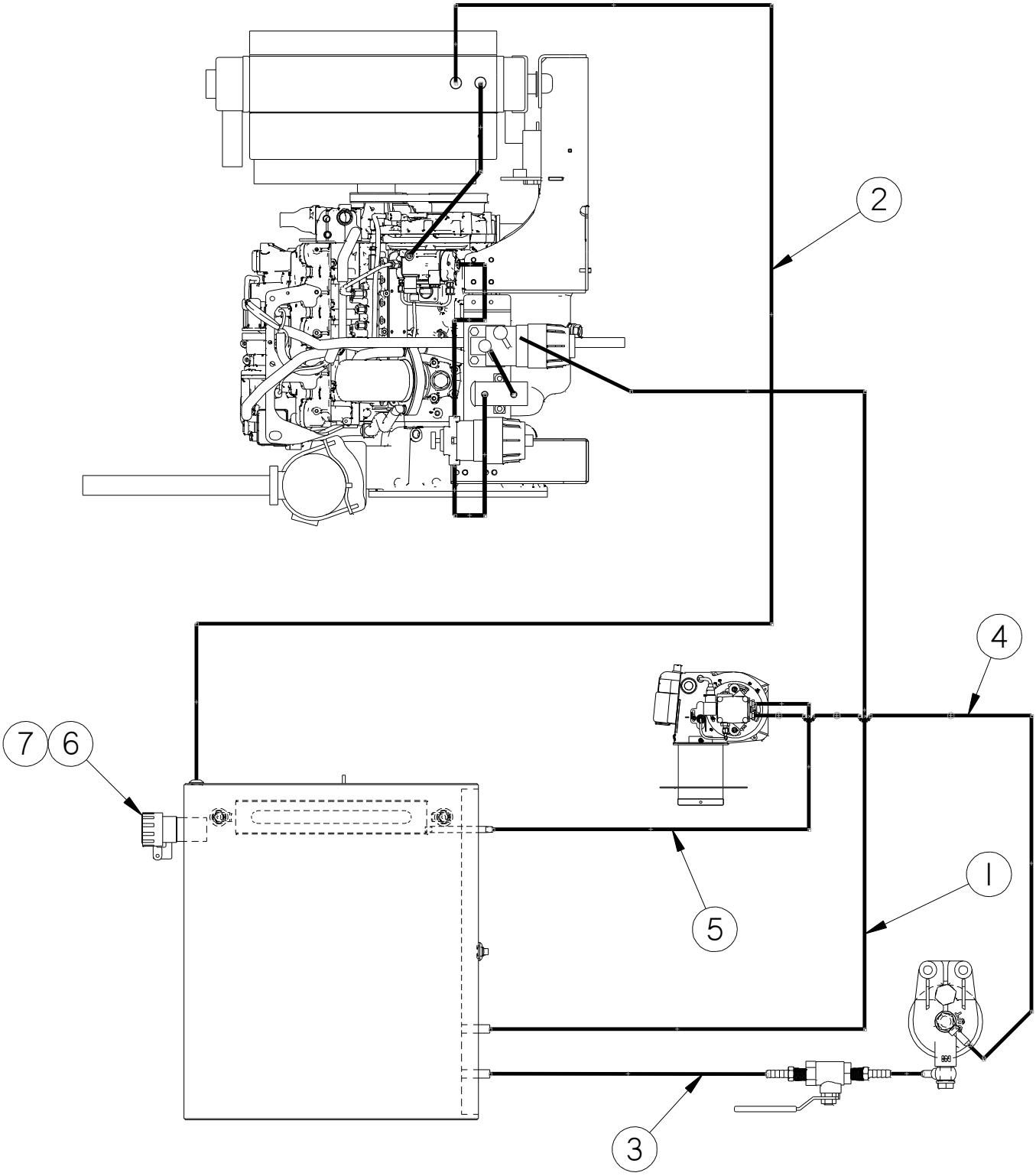

Fig. 9-29 Diesel Fuel Line Schematic - Compressors

©2018 by Crafco, Inc. All Rights Reserved

Chapter 9 Illustrated Parts List

FIG.	ITEM	PART NO.	DESCRIPTION	QTY.
Fig. 9-29	**1. DIESEL FUEL TANK TO ENGINE FUEL FILTER "IN" PORT**			
		26753	FITTING, 1/4 MPT X 3/8 JIC ELBOW	1
		26754	FITTING, #6 HOSE PUSH-ON	1
		29646N	HOSE, 3/8 x 51” FUEL LINE	1
		26079	CLAMP, GEAR	2
		-	BANJO FITTING	REF.
	2. ENGINE RETURN LINE TO DIESEL FUEL TANK			
		29647N	HOSE, 3/8 x 96” FUEL LINE	1
		26754	FITTING, #6 HOSE PUSH-ON	1
		26753	FITTING, 1/4 MPT X 3/8 JIC ELBOW	1
		26079	CLAMP, GEAR	2
	3. DIESEL FUEL TANK TO BURNER FUEL FILTER			
		26782	FITTING, 1/4” MPT X 5/16 JIC ELBOW	1
		26767	FITTING, #5 HOSE PUSH-ON	1
		29650N	HOSE, 5/16 x 55” FUEL LINE	1
		29984	HOSE BARB, 1/4MPT X 5/16 HOSE	1
		29195	BALL VALVE, 1/4 NPT	1
		29984	HOSE BARB, 1/4MPT X 5/16 HOSE	1
		29648N	HOSE ASSEMBLY, 5/16 X 10”	1
		47345N	FILTER ASSEMBLY	1
	6. BURNER FUEL FILTER TO BURNER INLET			
		29664N	HOSE ASSEMBLY, 5/16 X 22”	1
		26767	FITTING, #5 HOSE PUSH-ON	1
		26756N	ADAPTER, 5/16 JIC X 1/4NPT	1
	7. BURNER RETURN LINE TO DIESEL TANK			
		26756N	ADAPTER, 5/16 JIC X 1/4NPT	1
		26767	FITTING, #5 HOSE PUSH-ON	1
		29651N	HOSE ASSEMBLY, 5/16 X 65.5”	1
		26767	FITTING, #5 HOSE PUSH-ON	1
		47497	FITTING, 1/4” FPT X 5/16 JIC ELBOW	1
	6	43758N	FILLER CAP, RPLCMNT, FUEL-HYD TANKS	1
	7	43723N	GASKET, NARROW STYLE, FOR FILLER CAP	1

©2018 by Crafco, Inc. All Rights Reserved

9.22 Electrical Schematic – Electric Hose

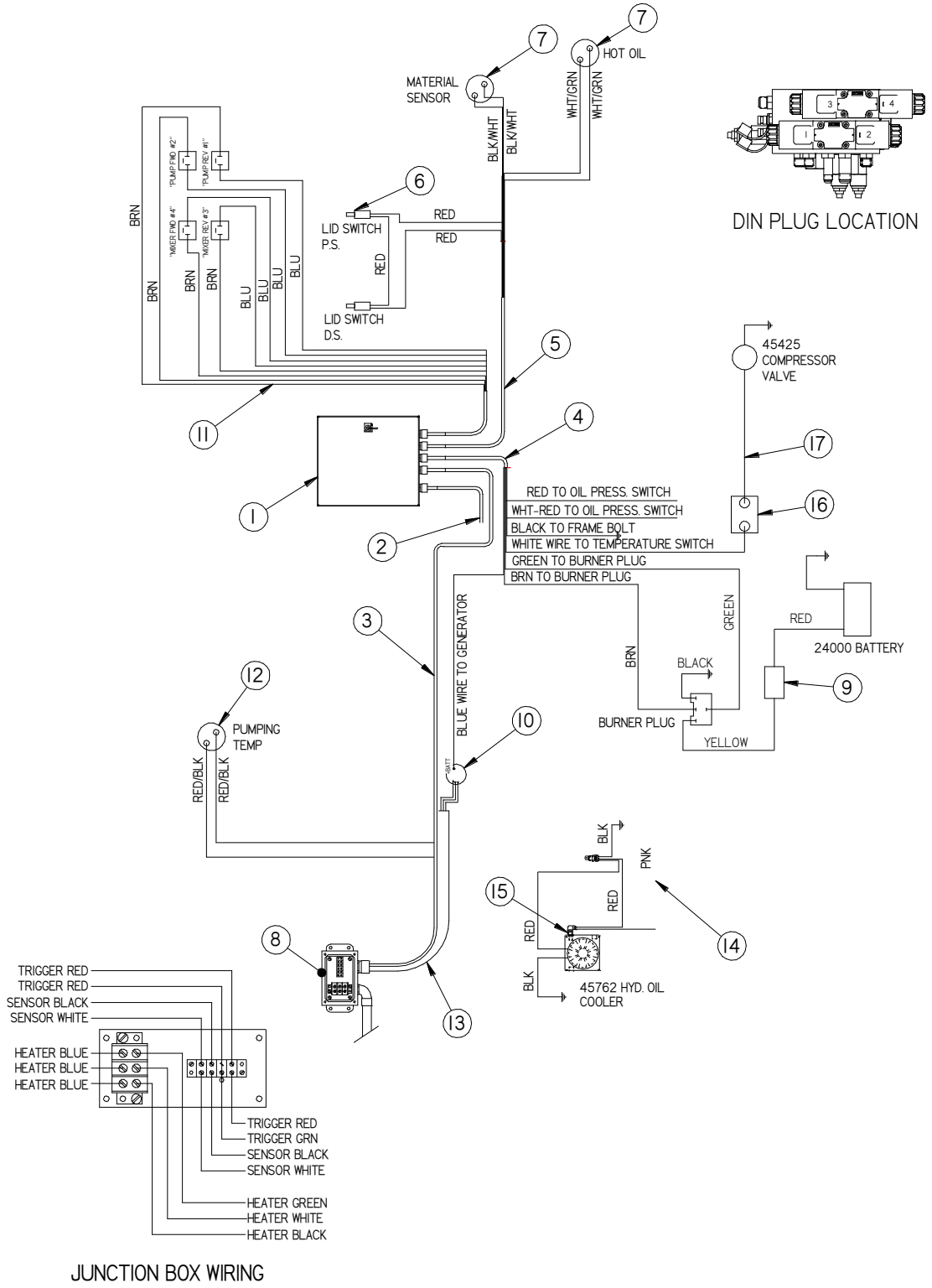

Fig. 9-30 Electrical Schematic – 47600EC100

©2018 by Crafco, Inc. All Rights Reserved

Chapter 9 Illustrated Parts List

FIG.	ITEM	PART NO.	DESCRIPTION	QTY.
Fig. 9-30	1	47202	CONTROL BOX ASSEMBLY	1
	2	45970	WIRING HARNESS, EXT. – NON-COMPRESSOR	1
	2	47212N	WIRING HARNESS, EXT. - COMPRESSORS	1
	3	51836	CABLE ASSEMBLY, TRIGGER	1
	4	52342N	CABLE ASSEMBLY, ENGINE	1
	5	51834	CABLE ASSEMBLY, SENSOR	1
	6	39608	LID SWITCH	2
	7	43465	SENSOR, RTD	2
	8	46791	JUNCTION BOX, HOSE	1
	9	31512	CIRCUIT BREAKER	1
	10	43612	GENERATOR – NON-COMPRESSOR	1
	10	46322	GENERATOR – COMPRESSOR	1
	11	43984	CABLE ASSEMBLY, VALVE	1
	12	56940	SENSOR, RTD – PUMPING TEMPERATURE	2
	13	43947	CABLE ASSEMBLY, HOSE	1
	14	45569	WIRING HARNESS, COOLER	1
	15	45542	SWITCH, TEMPERATURE – OIL COOLER	1
	16	45349	SWITCH, TEMPERATURE – COMPRESSOR	1
	17	43886	CABLE ASSEMBLY, COMPRESSOR VALVE	1

©2018 by Crafco, Inc. All Rights Reserved

9.23 Electrical Schematic – Standard Hose

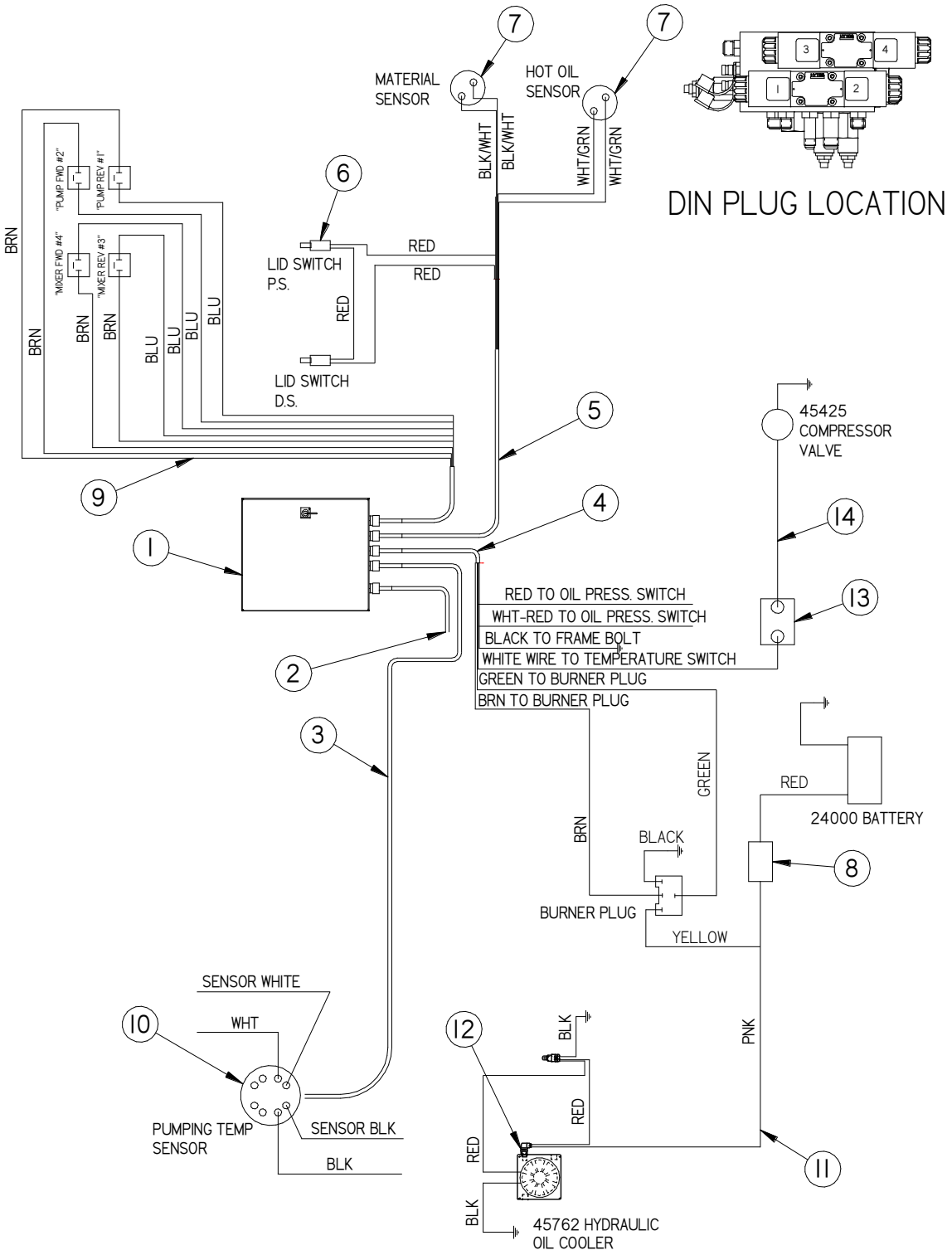

Fig. 9-31 Electrical Schematic – 47600SC100

Chapter 9 Illustrated Parts List

FIG.	ITEM	PART NO.	DESCRIPTION	QTY.
Fig. 9-31	1	47201	CONTROL BOX ASSEMBLY	1
	2	45970	WIRING HARNESS, EXT. – NON-COMPRESSOR	1
	2	47212N	WIRING HARNESS, EXT. – COMPRESSOR	1
	3	51836	CABLE ASSEMBLY, TRIGGER	1
	4	52342N	CABLE ASSEMBLY, ENGINE	1
	5	51834	CABLE ASSEMBLY, SENSOR	1
	6	39608	LID SWITCH	2
	7	43465	SENSOR, RTD	2
	8	31512	CIRCUIT BREAKER	1
	9	43984	CABLE ASSEMBLY, VALVE	1
	10	56940	SENSOR, RTD – PUMPING TEMPERATURE	2
	11	45569	WIRING HARNESS, COOLER	1
	12	45542	SWITCH, TEMPERATURE – OIL COOLER	1
	13	45349	SWITCH, TEMPERATURE – COMPRESSOR	1
	14	43886	CABLE ASSEMBLY, COMPRESSOR VALVE	1

©2018 by Crafco, Inc. All Rights Reserved

9.24 Optional Engine Cover for Compressor Models

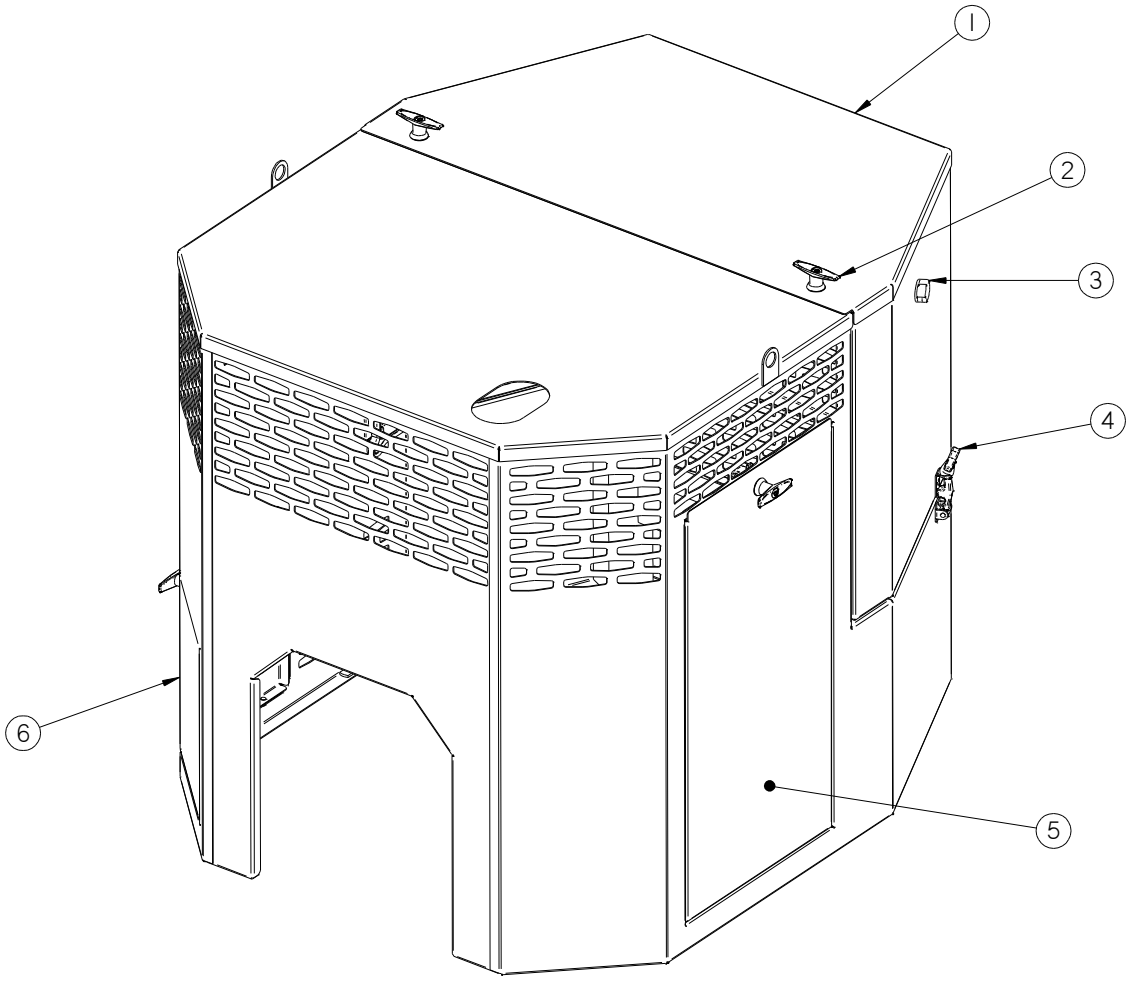

Fig. 9-32 Optional Engine Cover for Compressor Models

FIG.	ITEM	PART NO.	DESCRIPTION	QTY.
Fig. 9-32	1	47500N	OPTIONAL ENGINE COVER, 4LE2 ENGINE	1
	2	47510N	LATCH, COMPRESSION, W/ KEY	4
	3	43746	NEOPRENE HANDLE TRIM	2
	4	45600	RUBBER REPLACEMENT LATCH	2
	5	47506N	PASS SIDE DOOR	1
	6	47507N	AIR CLEANER DOOR	1
	N/A	47509N	RADIATOR SEAL KIT	1
	N/A	47519N	WEATHERSTRIP, BULB STYLE (FOR HOOD)	9 FT
	N/A	47511N	WEATHERSTRIP, FLAT (FOR DOORS)	6 FT
	N/A	47525N	OPTIONAL ENGINE COVER INSULATION KIT	1

©2018 by Crafco, Inc. All Rights Reserved

This page left blank intentionally

9.25 Hot Air Lance

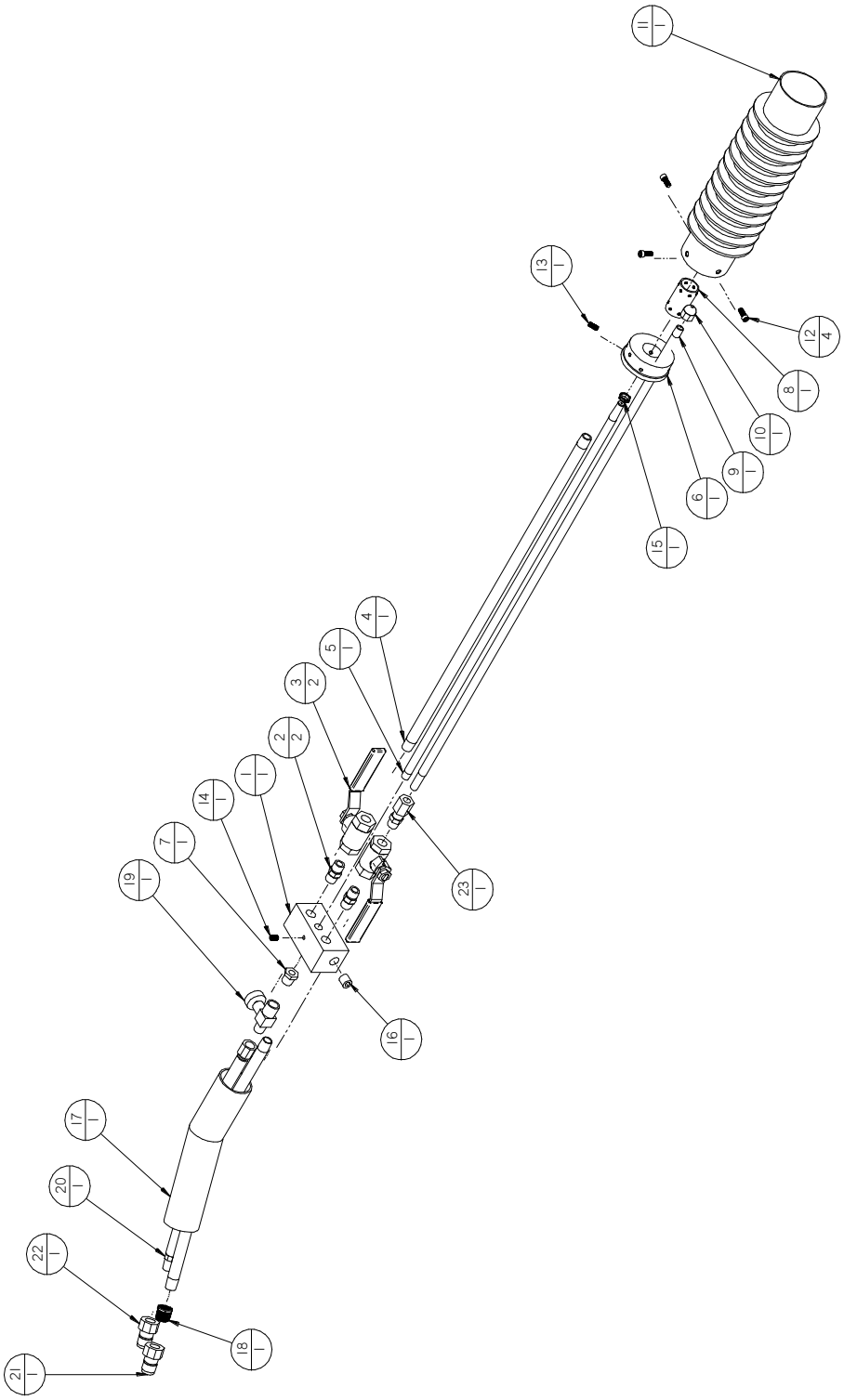

Fig. 9-33 Hot Air Lance (Option)

©2018 by Crafco, Inc. All Rights Reserved

Chapter 9 Illustrated Parts List

FIG.	ITEM	PART NO.	DESCRIPTION	QTY.
Fig. 9-33	1	45651	MIXING BLOCK	1
	2	51401	NIPPLE, 1/4 NPT HEX	2
	3	29195	VALVE, 1/4” BALL	2
	4	45656	AIR MIXER TUBE	1
	5	45658	PROPANE TUBE W/ ORIFICE	1
	6	45652	BURNER BASE	1
	7	28340	BUSHING, 1/4” NPT X 1/8” NPT	1
	8	45654	PRIMARY BURNER TUBE	1
	9	45657	AIR LANCE TUBE	1
	10	45668	AIR ORIFICE “A” - .125”	1
	11	45653	MAIN BURNER TUBE	1
	12	45670	SCREW, #10-32 X 1/2” ALLEN SCREW	4
	13	45672	SCREW, #10-32 X 1/2” ALLEN SET	1
	14	45671	SCREW, 1/4-20 X 3/8” ALLEN SET	1
	15	45669	NUT, 1/8-27 JAM	1
	16	27990	PLUG, 1/4” COUNTERSUNK	1
	17	45655	HANDLE ASSEMBLY	1
	18	45663	BUSHING, 3/8” NPT X 1/4” NPT REDUCER	1
	19	45659	VALVE, NEEDLE	1
	20	45675	HOSE ASSEMBLY, PROPANE	1
	21	45679	COUPLING, 1/4” FNPT X M	1
	22	45681	COUPLING, 1/4” NPT X FM	1
	23	45664	FITTING, 1/4” NPT X 3/8 JIC FERRULE LOCK	1

©2018 by Crafco, Inc. All Rights Reserved

9.26 Jacketed Pump System

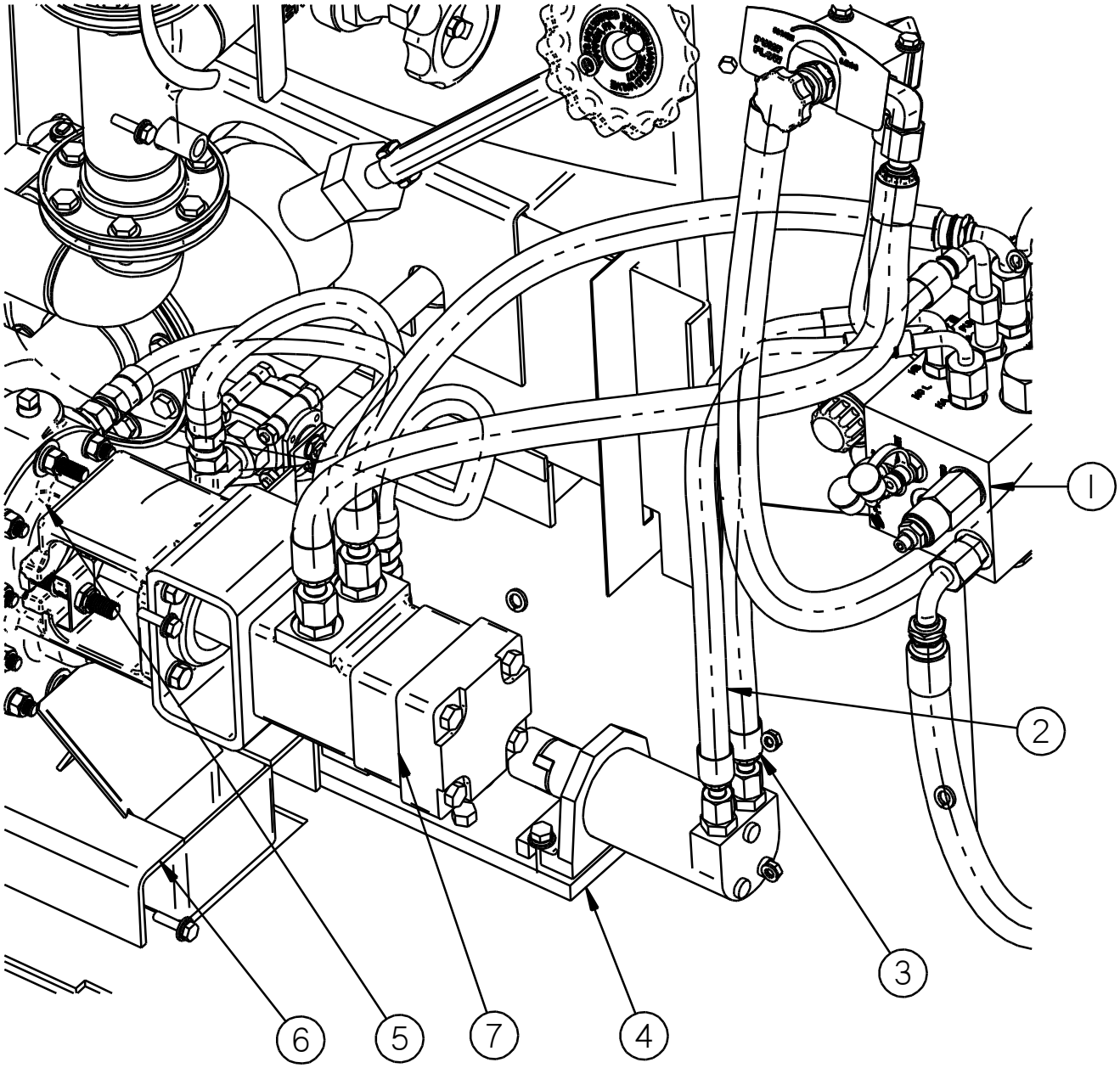

Fig. 9-34 Jacketed Pump System

Chapter 9 Illustrated Parts List

FIG.	ITEM	PART NO.	DESCRIPTION	QTY.
Fig. 9-34	1	45433	HYDRAULIC VALVE ASSY	1
	2	HYDRAULIC VALVE “HA” PORT TO HOT OIL MOTOR		
		29919	1/2 JIC X 3/8 0-RING ADAPTOR	1
		6M3K6G-6FJX 6G-8FJX90S 22 18.5	HYDRAULIC HOSE	1
		40311	STRAIGHT THD ADAPTER	1
	3	HYDRAULIC VALVE “HB” PORT TO HOT OIL MOTOR		
		40311	STRAIGHT THD ADAPTER	1
		6M3K6G-6FJX 6G-6FJX90S 20.25 17	HYDRAULIC HOSE	1
		40311	STRAIGHT THD ADAPTER	1
	4	41696	PUMP AND MOTOR ASSY, HOT OIL	1
	5	43127	MATL PUMP ASSY, JACKETED	1
	6	43129	PUMP MOUNTING PLATE	1
	7	22027	HYDRAULIC MOTOR	1

©2018 by Crafco, Inc. All Rights Reserved

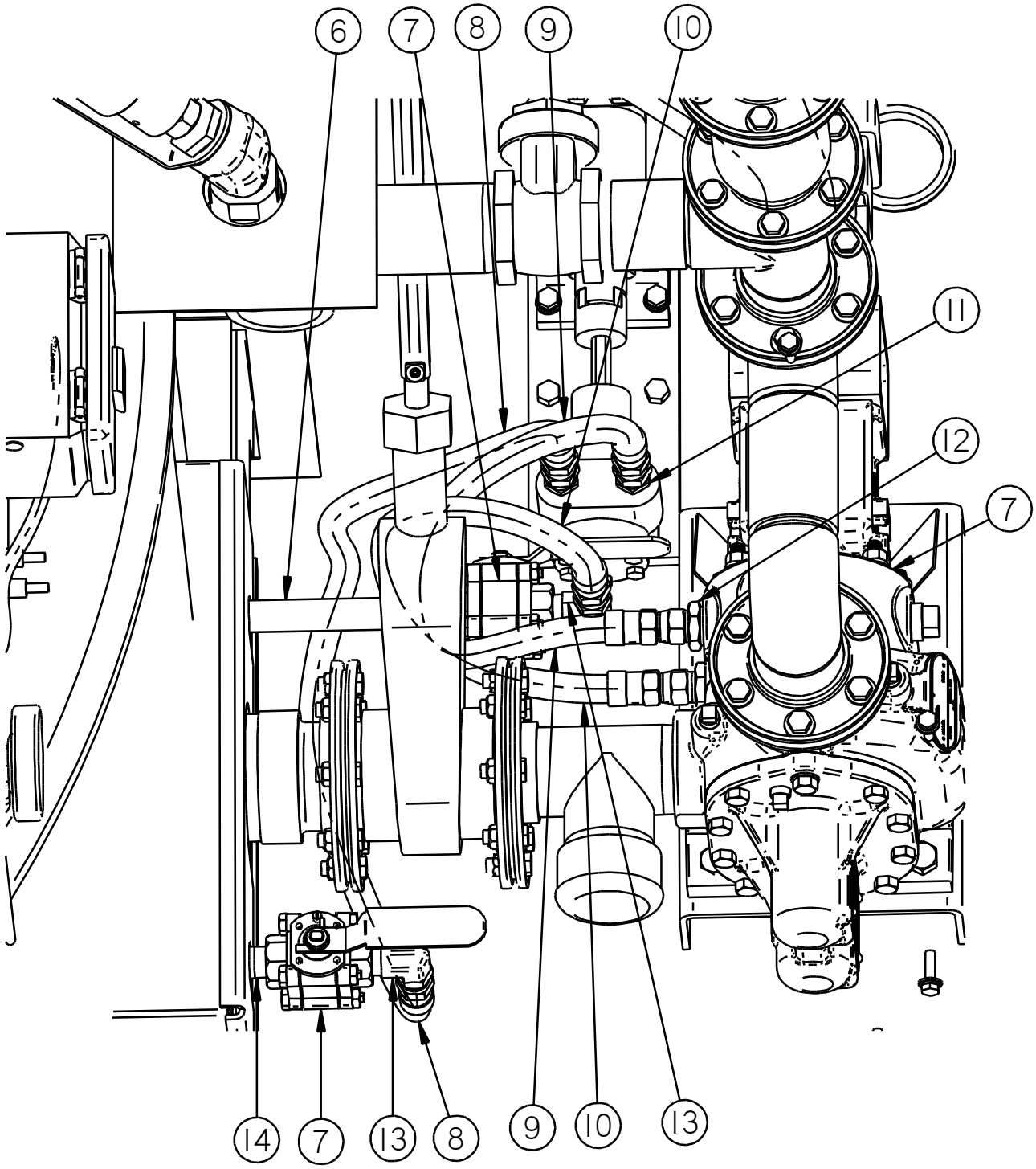

Fig. 9-35 Jacketed Pump System

Chapter 9 Illustrated Parts List

FIG.	ITEM	PART NO.	DESCRIPTION	QTY.
Fig. 9-35	6	47674N	NIPPLE, 1/2-14 NPT, 11.5"	1
	7	41499	1/2" HOT OIL BALL VALVE	2
	8	47656N	FLEX HOSE ASSEMBLY, 33”	1
	9	47657N	FLEX HOSE ASSEMBLY, 23”	1
	10	47658N	FLEX HOSE ASSEMBLY, 25”	1
	11	29844	ADAPTER - JIC MP 8MJ-8MP	2
	12	40316	MALE ADAPTER	2
	13	29846	ADAPTER - JIC MP 12MJ-8MP	2
	14	47675N	NIPPLE, 1/2-14 NPT, 6.5"	1

©2018 by Crafco, Inc. All Rights Reserved

9.27 Hydraulic Control Valve Assembly

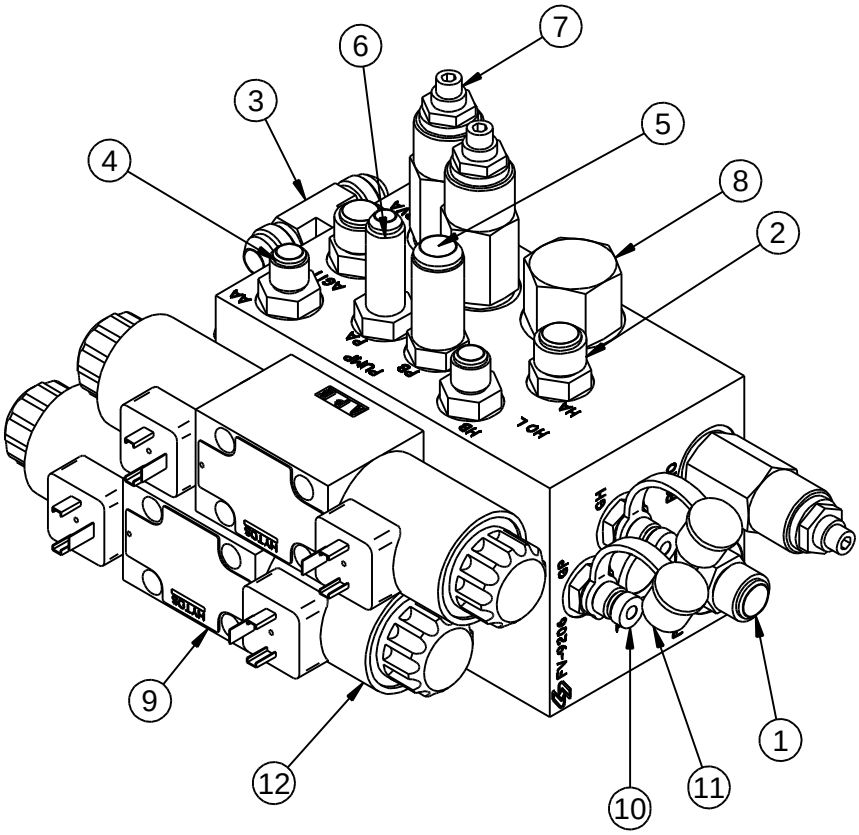

Fig. 9-36 Hydraulic Valve Assembly PN 45433

FIG.	ITEM	PART NO.	DESCRIPTION	QTY.
Fig. 9-36	1	29896	3/4-16 ORB X #8 JIC STR.	1
	2	29919	9/16-18 ORB X #8 JIC STR.	3
	3	29976	3/4-16 ORB X #8 JIC BRANCH TEE	1
	4	40311	9/16-18 ORB X #6 JIC STR.	2
	5	40320	9/16-18 ORING X #8 JIC STR.	2
	6	40308	9/16-18 ORB X #6 JIC LONG STR.	1
	7	45417	RELIEF VALVE	3
	8	45416	FLOW DIVIDER	2
	9	45418	VALVE ASSEMBLY – REX ROTH	2
	10	45414	FITTING, TEST POINT	3
	11	45413	CAP, DUST – TEST POINT	3
	12	45436	COIL, HYDRAULIC VALVE – REX ROTH	4

©2018 by Crafco, Inc. All Rights Reserved

This page left blank intentionally

9.28 Hot Oil Pump and Motor

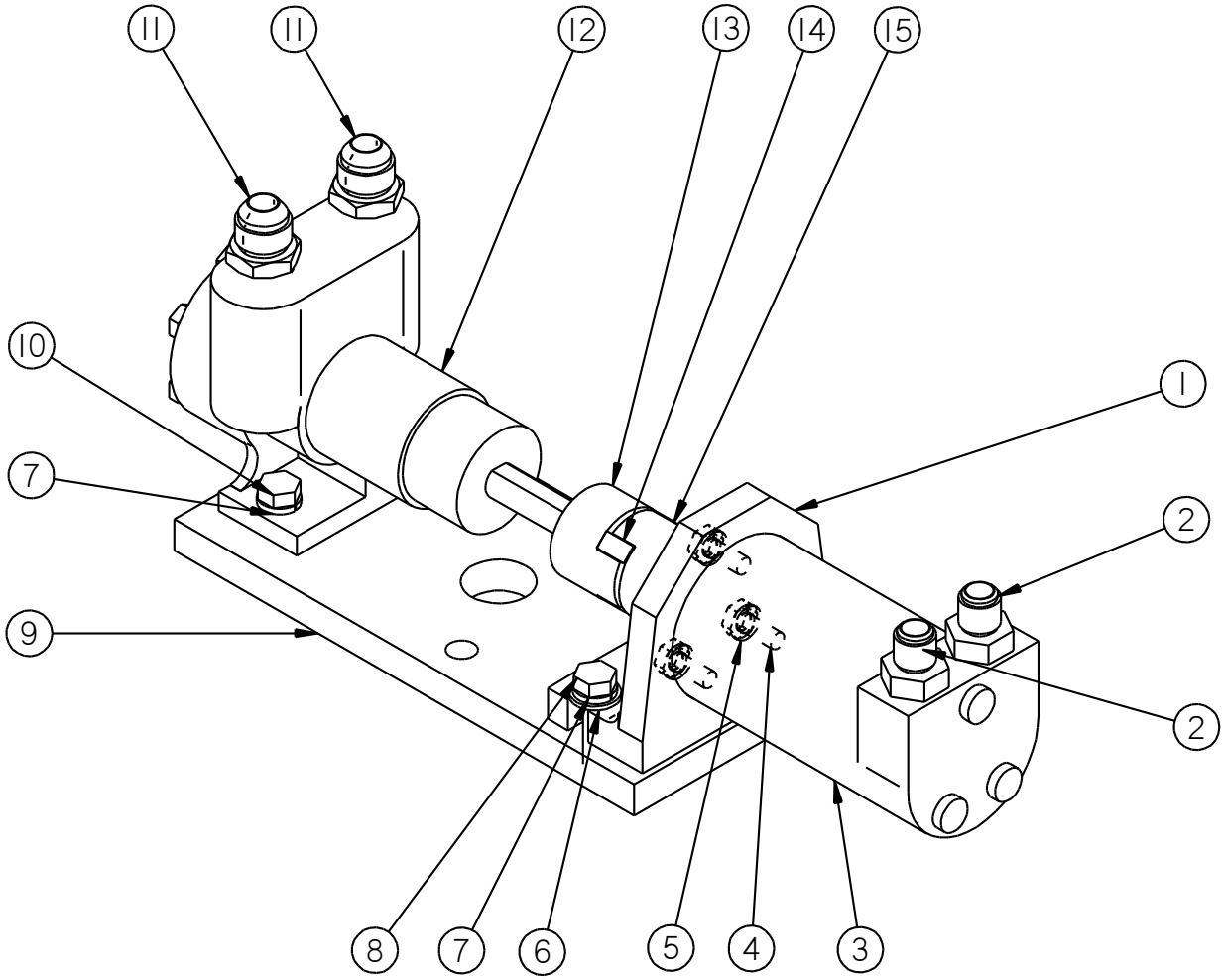

Fig. 9-37 Pump and Motor Assy, Hot Oil

©2018 by Crafco, Inc. All Rights Reserved

Chapter 9 Illustrated Parts List

FIG.	ITEM	PART NUMBER	QTY	DESCRIPTION
Fig. 9-37	1	22303	1	HYD. MOTOR MNTG BRACKET
	2	40311	2	STRAIGHT THREAD ADAPTER
	3	22302	1	HYDRAULIC MOTOR
	4	28850	3	1/4-28 X 5/8” HEX SCREW
	5	28645	3	1/4” SPLIT WASHER
	6	28671	2	5/16” SAE FLAT WASHER
	7	28646	4	5/16” LOCK WASHER
	8	28717	2	5/16-18 X 1 1/4” BOLT
	9	41689	1	H.O. MOUNTING PLATE
	10	28715	2	5/16-18 X 3/4” BOLT
	11	29844	2	ADAPTER, JIC MP 8MJ-8MP
	12	41280	1	HOT OIL CIRCULATING PUMP
	13	41180	1	COUPLING HALF, 1/2” BORE
	14	41182	1	SPIDER FOR COUPLING
	15	41695	1	COUPLING HALF, 5/8” BORE
	NS	45622	1	OIL PUMP REBUILD KIT, INCLUDES BELOW
		-	6	SCREWS
		-	1	IDLER PIN
		-	1	HEAD
		-	1	IDLER
		-	3	PACKING GLANDS
	NS	45621	1	OIL PUMP SEAL KIT, INCLUDES BELOW
		-	1	NUT
		-	1	OTR GLAND
		-	3	PACKING GLANDS
		-	1	INNER GLAND
		-	1	SPRING
		-	2	HEAD GASKETS
	NS	45620	1	3 PACKING GLAND RINGS, OIL PUMP

©2018 by Crafco, Inc. All Rights Reserved

9.29 Hydraulic System Diagram for Jacketed Pump Machines with the 23 HP engine (46200EB, 46200SB)

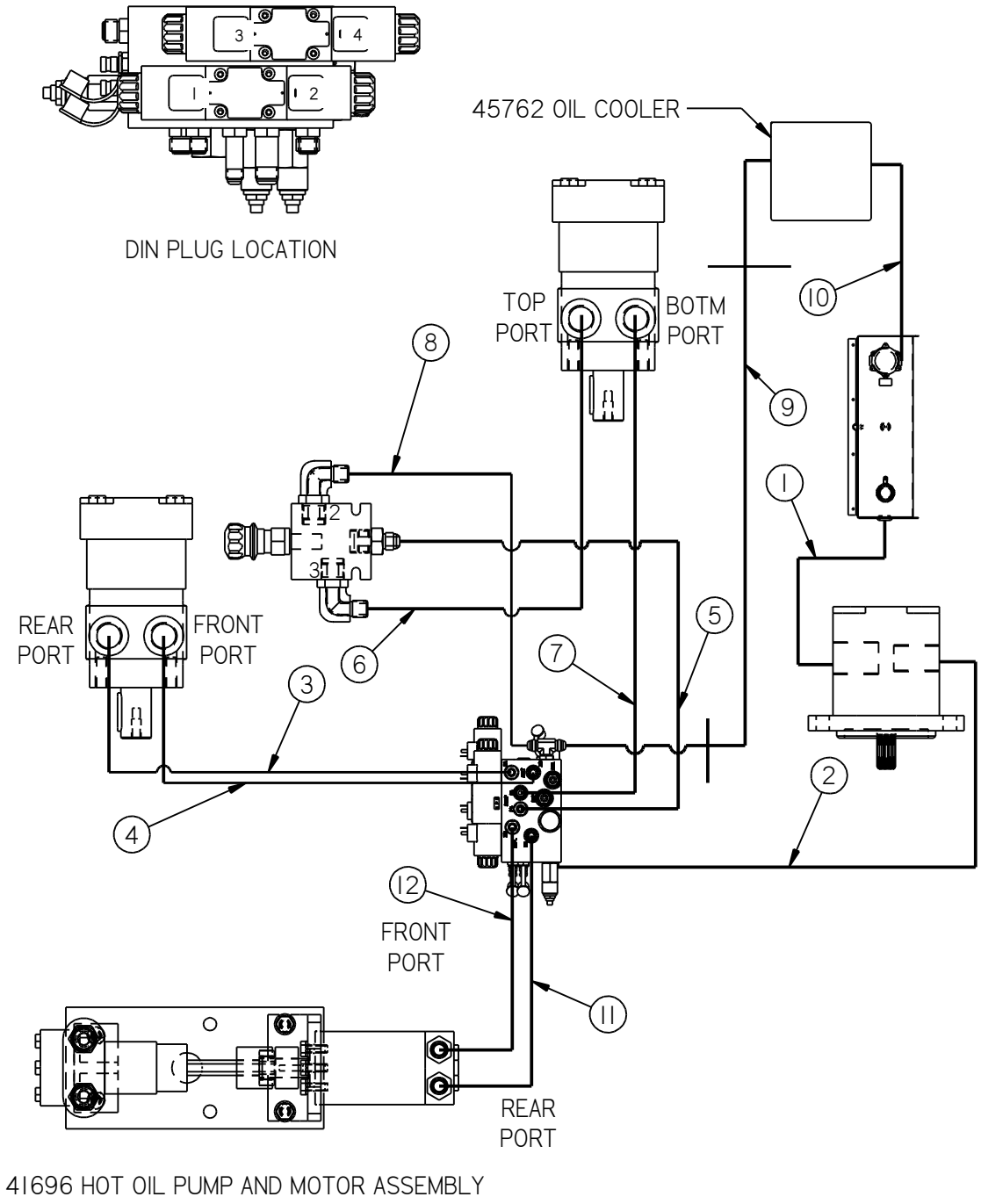

Fig. 9-38 Hydraulic System Diagram – non compressor

Chapter 9 Illustrated Parts List

FIG.	ITEM	PART NO.	DESCRIPTION	QTY.
Fig. 9-38	1	HYDRAULIC TANK TO HYDRAULIC PUMP		
		29818	1 5/8 ORING X 1 5/16 JIC	1
		16G4H 16G-16FJX 16G-16FJX90S 17.25 11.75	HYDRAULIC HOSE	1
		29820	1” ORING X 1” JIC	1
	2	HYDRAULIC PUMP TO HYDRAULIC VALVE		
		29842	¾ ORING X 5/8 JIC ELB.	1
		8M3K 8G-10FJX 8G-10FJX90S 19.75 16.25	HYDRAULIC HOSE	1
		29805	5/8 BULKHEAD UNION	1
		29806	ALT BULKHD UNION: USE IF TUBE NOT USED	1
		29807	5/8 NUT	1
		47618N	HYDRAULIC TUBE	1
		8M3K 8G-10FJX90S 8G-10FJX 118.5 115	ALT HOSE – USE IF TUBE NOT USED	1
		29805	5/8 BULKHEAD UNION	1
		29807	5/8 NUT	1
		8M3K 8G-10FJX 8G-8FJX90S 33.75 30.5	HYDRAULIC HOSE	1
		29897	½ ORING X ½ JIC	1
	3	HYDRAULIC VALVE “AB” TO AGIT MOTOR FRONT PORT		
		29919	1/2 JIC X 3/8 0-RING	1
		6M3K 6G-6FJX 6G-8FJX90S 31 27.5	HYDRAULIC HOSE	1
		46721	TUBE, HYD. PRESSURE	1
		22029	5/8 ORING X 3/8 JIC	1
	4	AGIT MOTOR FRONT PORT TO HYDRAULIC VALVE “AA”		
		22029	5/8 ORING X 3/8 JIC	1
		46722	TUBE, HYD. RETURN	1
		6M3K 6G-6FJX 6G-6FJX90S 30.75 27.5	HYDRAULIC HOSE	1
		40311	3/8 ORING X ½ JIC	1
	5	HYDRAULIC VALVE “PA” TO FLOW CONTROL #1 PORT		
		40308	3/8 ORING X 3/8 JIC	1
		6M3K 6G-8FJX 6G-6FJX90L 15.75 12.25	HYDRAULIC HOSE	1
		29896	½ ORING X ½ JIC ELBOW	1

©2018 by Crafco, Inc. All Rights Reserved

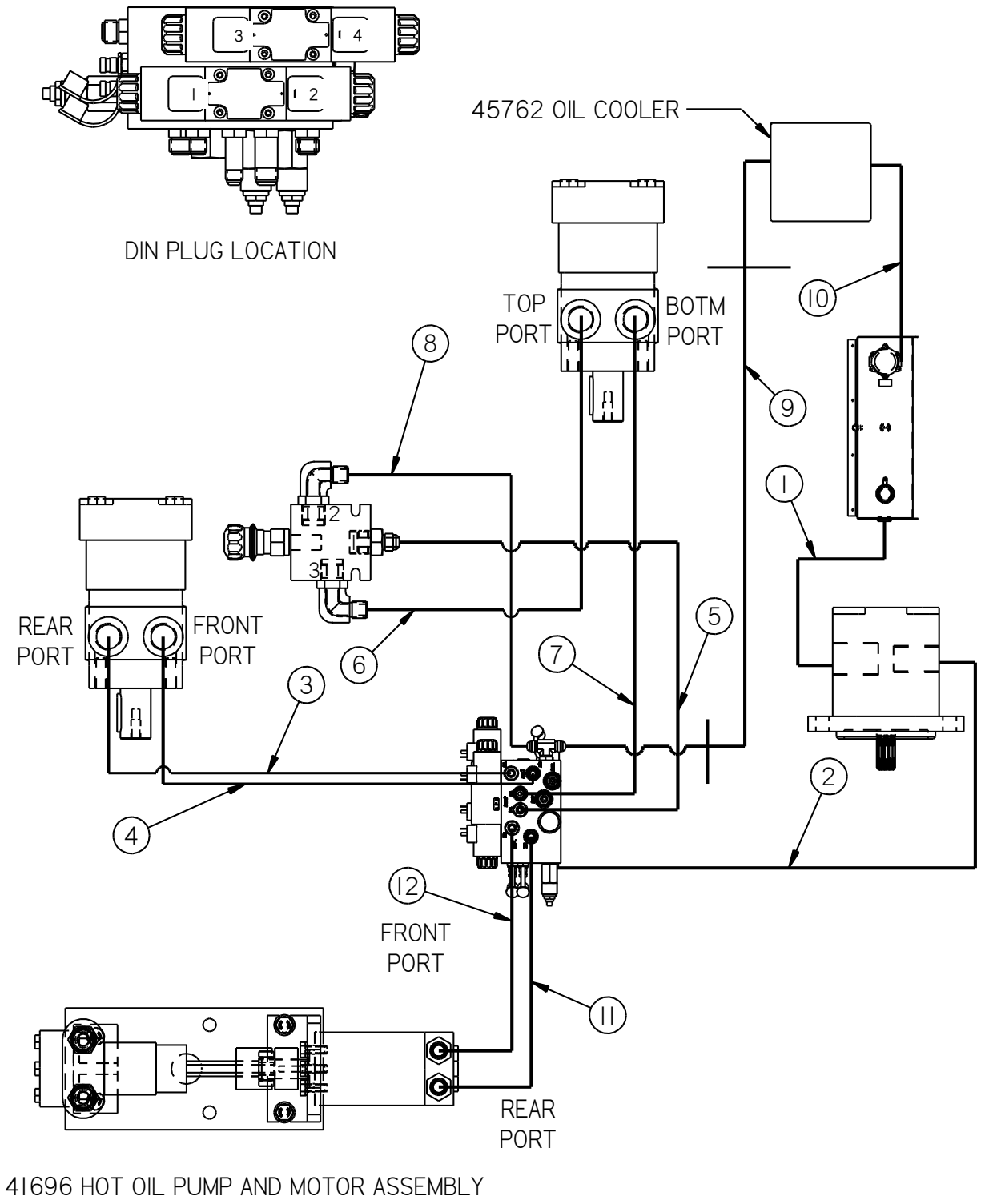

Fig. 9-39 Hydraulic System Diagram – non compressor

Chapter 9 Illustrated Parts List

FIG.	ITEM	PART NO.	DESCRIPTION	QTY.
Fig. 9-39	6	FLOW CONTROL #3 PORT TO PUMP MOTOR TOP PORT		
		29896	½ ORING X ½ JIC ELBOW	1
		8M3K 8G-8FJX 8G-8FJX 30 27	HYDRAULIC HOSE	1
		29913	5/8 ORING X ½ JIC	1
	7	PUMP MOTOR BOTTOM PORT TO HYDRAULIC VALVE		
		29913	5/8 ORING X ½ JIC	1
		8M3K 8G-8FJX 8G-8FJX90S 23.5 20	HYDRAULIC HOSE	1
		29919	1/2 JIC X 3/8 0-RING ADAPTOR	1
	8	FLOW CONTROL #2 PORT TO HYDRAULIC VALVE TANK PORT		
		29896	½ ORING X ½ JIC ELBOW	1
		8M3K 8G-8FJX 8G-8FJX90S 37.25 33.75	HYDRAULIC HOSE	1
		29976	½ ORING RUN TEE	1
	9	HYDRAULIC VALVE TANK TO HYDRAULIC OIL COOLER		
		29976	½ ORING RUN TEE	1
		8M3K 8G-10FJX 8G-8FJX90S 20.25 17	HYDRAULIC HOSE	1
		29805	5/8 BULKHEAD UNION	1
		29807	5/8 NUT	1
		47617N	HYDRAULIC TUBE	1
		8M3K 8G-10FJX90S 8G-10FJX 80.5 77	ALT HOSE – USE IF TUBE NOT USED	1
		29805	5/8 BULKHEAD UNION	1
		29806	ALT BULKHD UNION: USE IF TUBE NOT USED	1
		29807	5/8 NUT	1
		8M3K 8G-10FJX 8G-12FJX90S 35 30.75	HYDRAULIC HOSE	1
		27692	1” FJIC X ¾ MJIC	1
		29951	1” JIC X 1” ORING TEE	1
	10	HYDRAULIC OIL COOLER TO HYDRAULIC TANK		
		29824	1” 90° ELBOW	1
		16M3K 16G-16FJX 16G-16FJX 30 26	HYDRAULIC HOSE	1
		29818	1 ¼ ORING X 1” JIC	1

©2018 by Crafco, Inc. All Rights Reserved

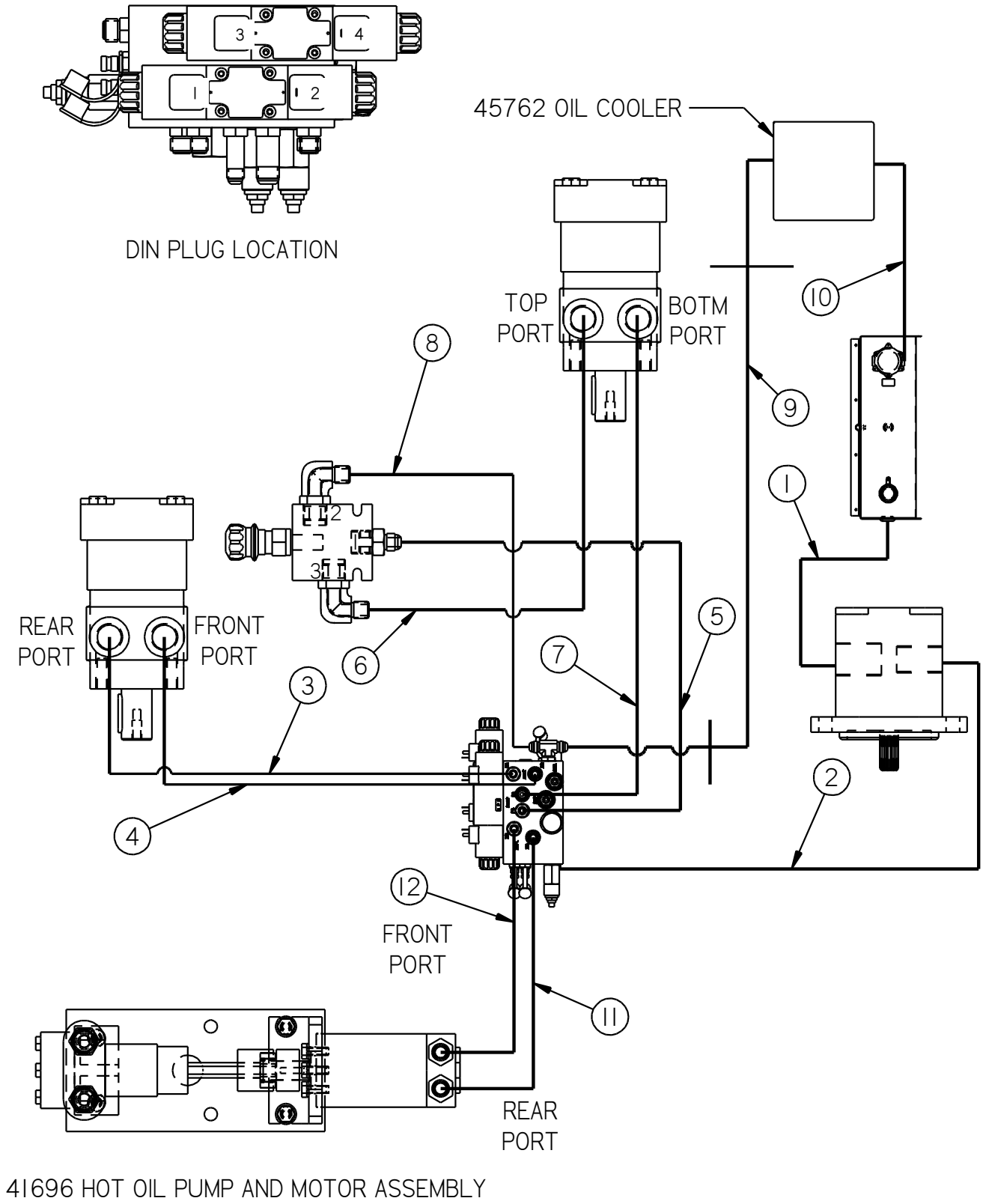

Fig. 9-40 Hydraulic System Diagram – non compressor

©2018 by Crafco, Inc. All Rights Reserved

Chapter 9 Illustrated Parts List

FIG.	ITEM	PART NO.	DESCRIPTION	QTY.
Fig. 9-40	11	**HYDRAULIC VALVE "HA" PORT TO HOT OIL MOTOR REAR PORT**		
		29919	1/2 JIC X 3/8 0-RING ADAPTOR	1
		6M3K6G-6FJX 6G-8FJX90S 22 18.5	HYDRAULIC HOSE	1
		40311	STRAIGHT THD ADAPTER	1
	12	**HOT OIL MOTOR FRONT PORT TO HYDRAULIC VALVE "HB" PORT**		
		40311	STRAIGHT THD ADAPTER	1
		6M3K6G-6FJX 6G-6FJX90S 20.25 17	HYDRAULIC HOSE	1
		40311	STRAIGHT THD ADAPTER	1

©2018 by Crafco, Inc. All Rights Reserved

Chapter 9 Illustrated Parts List

9.30 Hydraulic System Diagram for Jacketed Pump Machines with the 42 HP engine (47600EC100, 47600SC100, 47600ECPA, 47600SCPA)

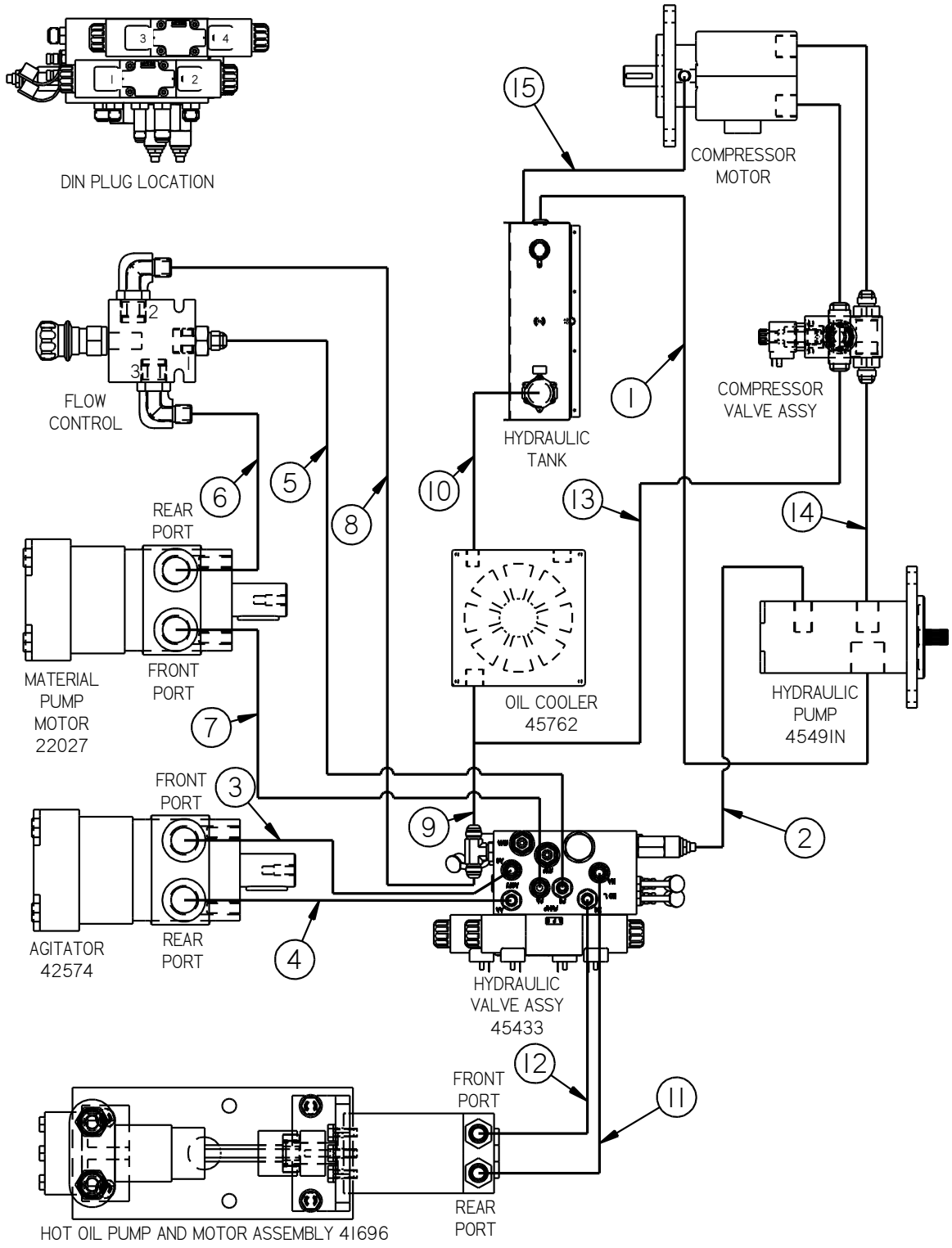

Fig. 9-41 Hydraulic System Diagram - compressor

©2018 by Crafco, Inc. All Rights Reserved

Chapter 9 Illustrated Parts List

FIG.	ITEM	PART NO.	DESCRIPTION	QTY.
Fig. 9-41	1	HYDRAULIC TANK TO HYDRAULIC PUMP		
		29885	1 5/8 ORING X 1 1/4 JIC	1
		20G4H 20G-20FJX 20G-20FJX 24 18	HYDRAULIC HOSE	1
		29888	1 5/8 ORING X 1 1/4 JIC	1
	2	HYDRAULIC PUMP TO HYDRAULIC VALVE		
		29842	¾ ORING X 5/8 JIC ELB.	1
		8M3K 8G-10FJX 8G-10FJX90S 25 22.25	HYDRAULIC HOSE	1
		29805	5/8 BULKHEAD UNION	1
		29806	ALT BULKHD UNION: USE IF TUBE NOT USED	1
		29807	5/8 NUT	1
		47618N	HYDRAULIC TUBE	1
		8M3K 8G-10FJX90S 8G-10FJX 118.5 115	ALT HOSE – USE IF TUBE NOT USED	1
		29805	5/8 BULKHEAD UNION	1
		29807	5/8 NUT	1
		8M3K 8G-10FJX 8G-8FJX90S 33.75 30.5	HYDRAULIC HOSE	1
		29897	½ ORING X ½ JIC	1
	3	HYDRAULIC VALVE “AB” TO AGIT MOTOR FRONT PORT		
		29919	1/2 JIC X 3/8 0-RING	1
		6M3K 6G-6FJX 6G-8FJX90S 31 27.5	HYDRAULIC HOSE	1
		46721	TUBE, HYD. PRESSURE	1
		22029	5/8 ORING X 3/8 JIC	1
	4	AGIT MOTOR FRONT PORT TO HYDRAULIC VALVE “AA”		
		22029	5/8 ORING X 3/8 JIC	1
		46722	TUBE, HYD. RETURN	1
		6M3K 6G-6FJX 6G-6FJX90S 30.75 27.5	HYDRAULIC HOSE	1
		40311	3/8 ORING X ½ JIC	1
	5	HYDRAULIC VALVE “PB” TO FLOW CONTROL #1 PORT		
		40308	3/8 ORING X 3/8 JIC	1
		6M3K 6G-8FJX 6G-6FJX90L 15.75 12.5	HYDRAULIC HOSE	1
		29896	½ ORING X ½ JIC ELBOW	1

©2018 by Crafco, Inc. All Rights Reserved

Chapter 9 Illustrated Parts List

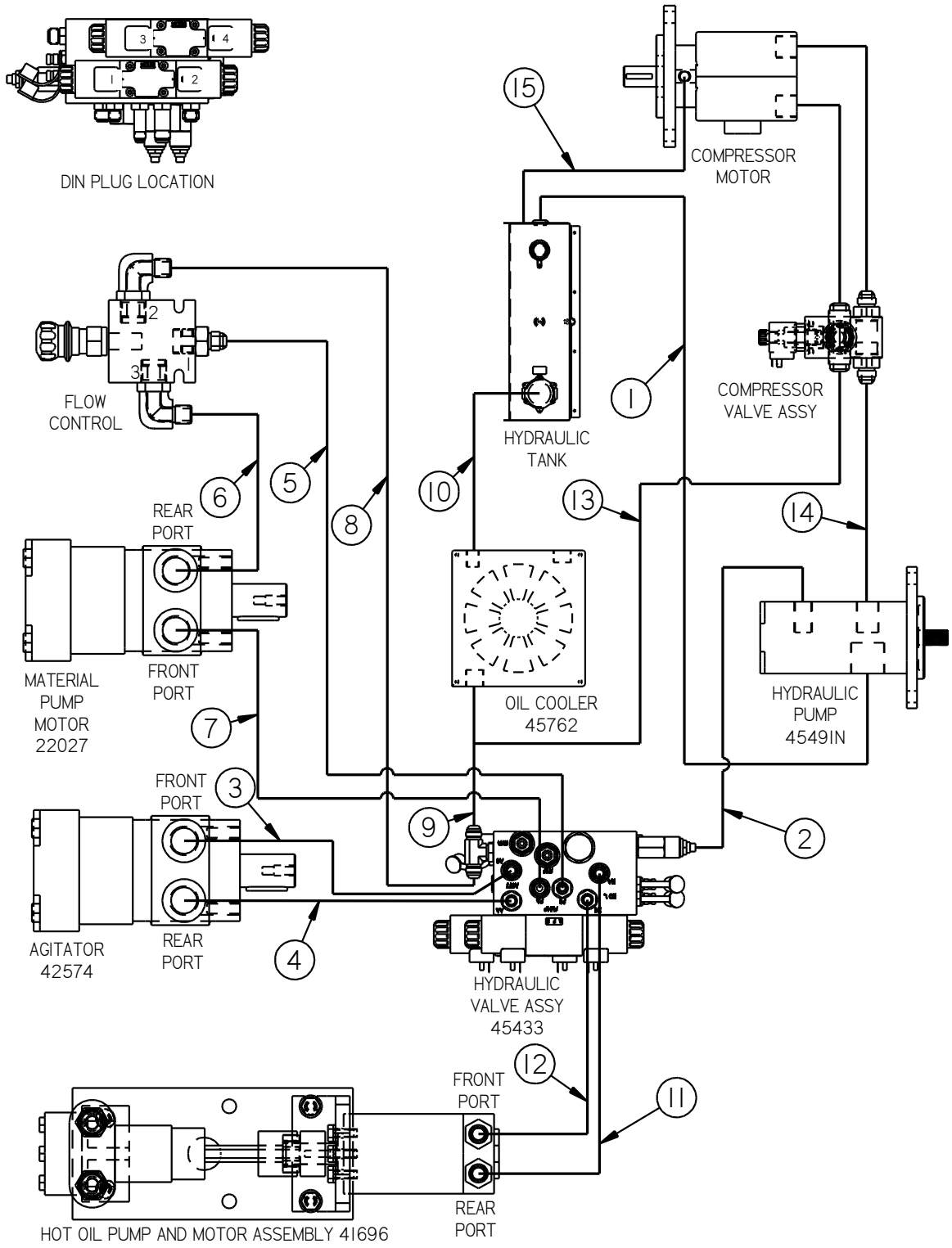

Fig. 9-42 Hydraulic System Diagram - compressor

©2018 by Crafco, Inc. All Rights Reserved

Chapter 9 Illustrated Parts List

FIG.	ITEM	PART NO.	DESCRIPTION	QTY.
Fig. 9-42	6	FLOW CONTROL #3 PORT TO PUMP MOTOR REAR PORT		
		29896	½ ORING X ½ JIC ELBOW	1
		8M3K 8G-8FJX 8G-8FJX 30 27	HYDRAULIC HOSE	1
		29913	5/8 ORING X ½ JIC	1
	7	PUMP MOTOR FRONT PORT TO HYDRAULIC VALVE “PA”		
		29913	5/8 ORING X ½ JIC	1
		8M3K 8G-8FJX 8G-8FJX90S 23.5 20	HYDRAULIC HOSE	1
		29919	1/2 JIC X 3/8 0-RING ADAPTOR	1
	8	FLOW CONTROL #2 PORT TO HYDRAULIC VALVE TANK PORT		
		29896	½ ORING X ½ JIC ELBOW	1
		8M3K 8G-8FJX 8G-8FJX90S 37.25 33.75	HYDRAULIC HOSE	1
		29976	½ ORING RUN TEE	1
	9	HYDRAULIC VALVE TANK TO HYDRAULIC OIL COOLER		
		29976	½ ORING RUN TEE	1
		8M3K 8G-10FJX 8G-8FJX90S 20.25 17	HYDRAULIC HOSE	1
		29805	5/8 BULKHEAD UNION	1
		29807	5/8 NUT	1
		47617N	HYDRAULIC TUBE	1
		8M3K 8G-10FJX90S 8G-10FJX 80.5 77	ALT HOSE – USE IF TUBE NOT USED	1
		29805	5/8 BULKHEAD UNION	1
		29806	ALT BULKHD UNION: USE IF TUBE NOT USED	1
		29807	5/8 NUT	1
		8M3K 8G-10FJX 8G-12FJX90S 35 30.75	HYDRAULIC HOSE	1
		27692	1” FJIC X ¾ MJIC	1
		29951	1” JIC X 1” ORING TEE	1
	10	HYDRAULIC OIL COOLER TO HYDRAULIC TANK		
		29824	1” 90° ELBOW	1
		16M3K 16G-16FJX 16G-16FJX 30 26	HYDRAULIC HOSE	1
		29818	1 ¼ ORING X 1” JIC	1

©2018 by Crafco, Inc. All Rights Reserved

Chapter 9 Illustrated Parts List

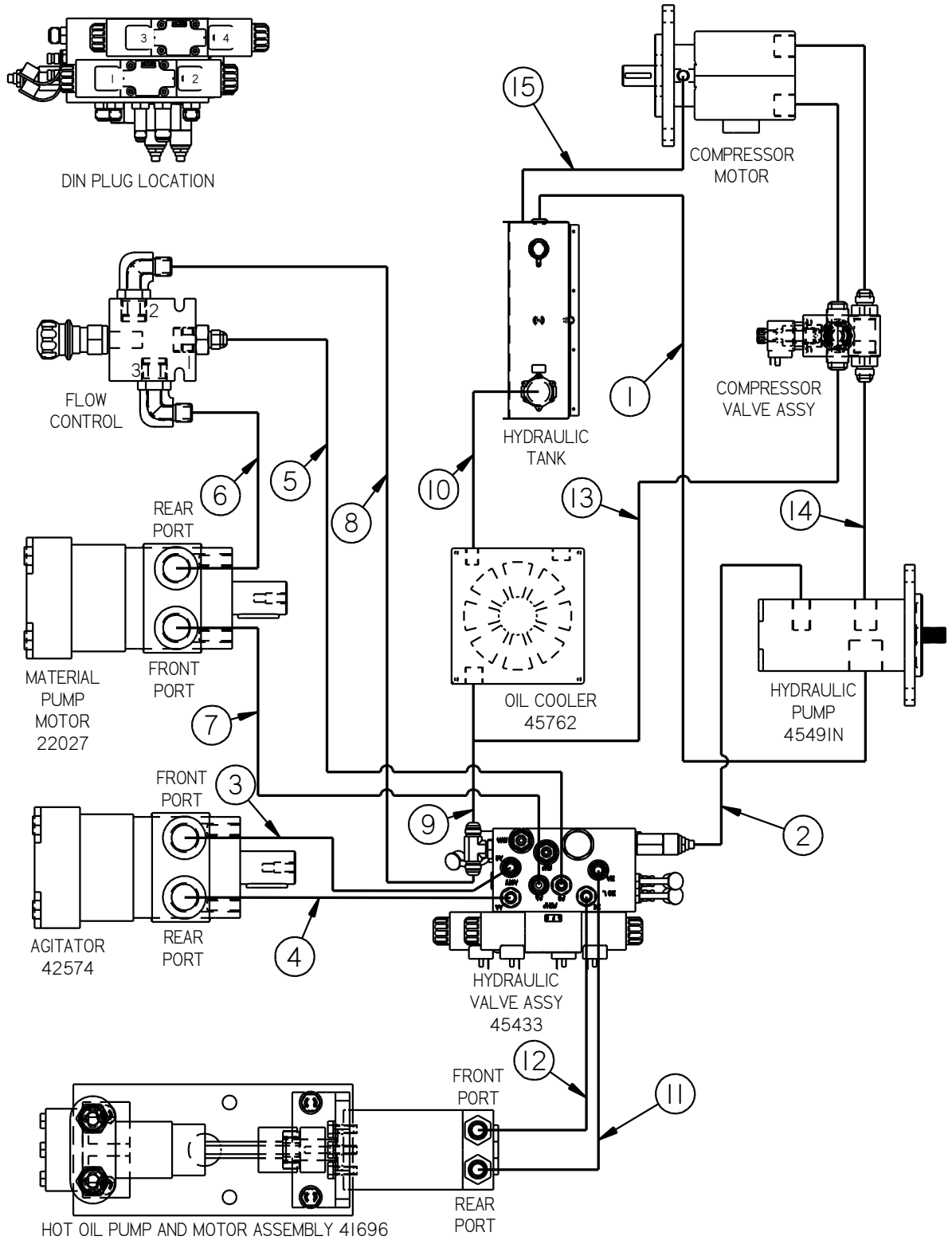

Fig. 9-43 Hydraulic System Diagram - compressor

©2018 by Crafco, Inc. All Rights Reserved

Chapter 9 Illustrated Parts List

FIG.	ITEM	PART NO.	DESCRIPTION	QTY.
Fig. 9-43	11	HYDRAULIC VALVE “HA” PORT TO HOT OIL MOTOR REAR PORT		
		29919	1/2 JIC X 3/8 0-RING ADAPTOR	1
		6M3K6G-6FJX 6G-8FJX90S 22 18.5	HYDRAULIC HOSE	1
		40311	STRAIGHT THD ADAPTER	1
	12	HOT OIL MOTOR FRONT PORT TO HYDRAULIC VALVE “HB” PORT		
		40311	STRAIGHT THD ADAPTER	1
		6M3K6G-6FJX 6G-6FJX90S 20.25 17	HYDRAULIC HOSE	1
		40311	STRAIGHT THD ADAPTER	1
	13	COMPR VALVE TO HYD OIL COOLER		
		29900	¾ ORING RUN TEE	1
		16M3K 16G-12FJX 16G-16FJX90S 72 65.5	HYDRAULIC HOSE	1
		29951	1” ORING RUN TEE	1
	14	HYDRAULIC PUMP PRESSURE TO COMPRESSOR VALVE “I” PORT		
		29978	¾ ORING X 5/8 JIC ELB.	1
		10M3K 10G-12FJX 10G-10FJX90S 54 50.25	HYDRAULIC HOSE	1
		29821	¾ ORING X 5/8 JIC	1
	15	HOT OIL MOTOR FRONT PORT TO HYDRAULIC VALVE “HB” PORT		
		29881	¼ NPT X 3/8 JIC	1
		6M3K 6G-6FJX 6G-6FJX90S 56 52.75	HYDRAULIC HOSE	1
		29881	¼ ORING X 3/8 JIC	1

©2018 by Crafco, Inc. All Rights Reserved

Chapter 10 Tools and Accessories

10.0 Tools and Accessories

Crafco Applicator Disk
27162 – 3” Disk Assembly
27163 – 4” Disk Assembly
27164 – 6” Disk Assembly

Crafco Swivel Disk Applicator
27120 – 3” Swivel Applicator
27130 – 4” Swivel Applicator

Crafco Sealing Foot/Flush
27154 – 1/4” Flush
27155 – 3/8” Flush

Crafco Sealing Foot/Protruded
27159 – 1/4” Protruding
27160 – 3/8” Protruding

Crafco Joint Sealing Tip
27146 – 1/4” Sealing Tip
27147 – 3/8” Sealing Tip

Crafco Round Sealing Tip
27170 – 3/8” Sealing Tip
27171 – 1/2” Sealing Tip

Crafco Cold Air Lance – 47483N

©2018 by Crafco, Inc. All Rights Reserved

Chapter 10 Tools and Accessories

Crafco Heavy Duty Squeegee with Aluminum Handle - 27199
27195 – Replacement Blade

Super Shot Drip Stopper
Use with 50270 Duckbill
27114 – Tip Adapter
27115 – Shroud, Tip Adapter

Crafco Duckbill - 50270

Crafco Pour Pot with Wheels - 40200

Crafco Hand Held Pour Pot - 40201

Crafco Heat Lance - 31370

©2018 by Crafco, Inc. All Rights Reserved

Chapter 10 Tools and Accessories

Crafco Heat Lance with Regulator and Attachments - 32259

Crafco Hand Torch w/ 20ft. Hose - 25012

©2018 by Crafco, Inc. All Rights Reserved

©2018 Crafco, Inc.