CRAFCO®
PRESERVATION PRODUCTS

PATCHER 4

For November 2026 & Newer Patcher 4's
Operator/Parts Manual – 56645N
Revision L

Fill in the appropriate fields that apply to this machine.

Machine S/N: _____

Engine S/N: _____

Gear Box S/N: _____

Revisions

Revision	Description	Date
A	Added section 5-6 Agitator Function. Added hot oil supply valve caution to tables 5-1 and 5-15. Updated hydraulic hose part numbers on table 9-6 and 9-7. Updated hydraulic tank part number on table 9-4. Updated fig. 9-6, 9-7, 9-20, 9-21. Added radiator maintenance to table 6-1. Added Deutz engine to table 4-1. Added table 9-6. Added figure 9-6.	8/23/23
B	Added Section 8-4 Thermostat (Oil, Material LCD Display Trouble Shooting and Table 8-4. Updated Hydraulic & Fuel Tank part numbers in Table 9-1 & 9-4.	1/19/24
C	Updated Safety Information Chapter 2.0 and Section 5.17. Added Burner Box part number to Table 9-3. Added Burner Box Insulation Replacement Kit part number to Table 6-5	3/2024
D	Updated Burner maintenance in table 6-1. Added burner flame retainer part number to table 6-5, Updated table 9-12	9/2024
E	Added Section 8-17 and 8-17-1, “Engine Event History Log”	11/2024
F	Updated fuel filter / water separator information Table 6-5, Table 9-6 and Figure 9-6	4/2025
G	Updated Burner Flame Retention Head part number, Table 6-5 and Table 9-12. Updated Mixer Shaft Packing part number, Table 6-5. Updated Burner Box Insulation Replacement Kit part number, Table 6-5. Updated Replacement Burner Box part number, Table 9-3. Updated burner air settings on Table 8-10. Added spout extension to Figure 9-18, 9-19 and Table 9-18 and 9-19.	11/2025
H	Removed Deutz Engine information from Table 4-1, 6-5 and 9-1. Removed Deutz Engine information from parts list.	12/2025
J	Updated Corporate address. Removed low velocity heat lance from tool list. Added Figure 5-15 and 5-16	03/2026
K	Updated Mastic/Techcrete Transport Bucket, pg. 10-2	07/2026
L	Added relay information to Figure 9-13 and Table 9-13. Updated Crafco Logo, warranty information and contact information.	11/2026

Machine Views

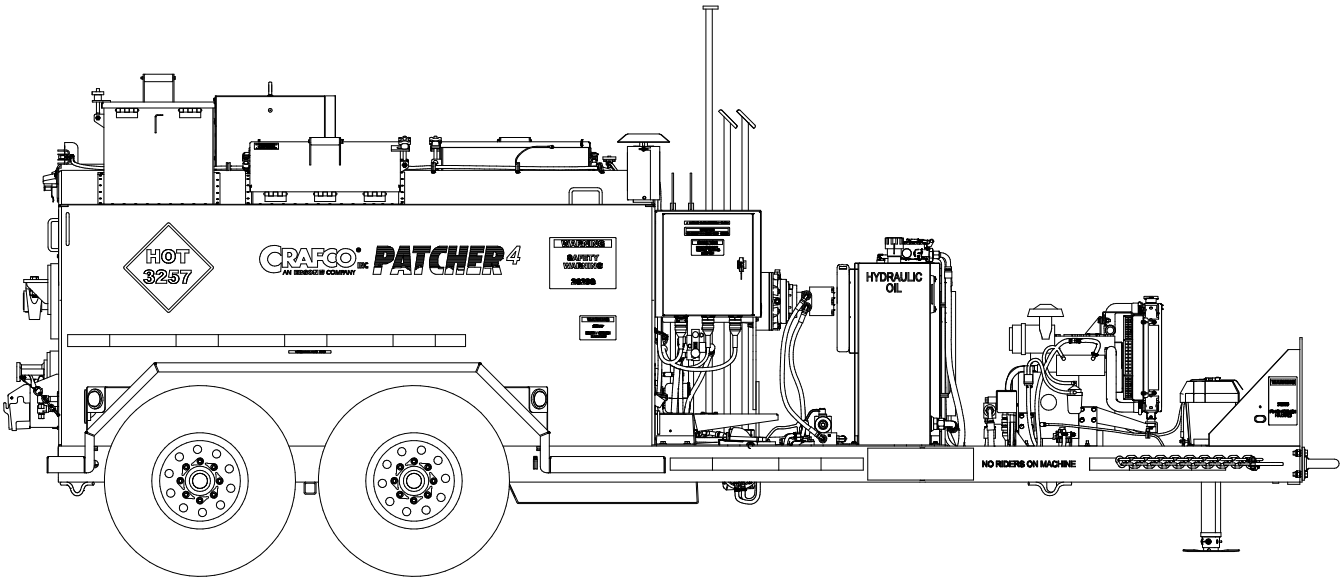

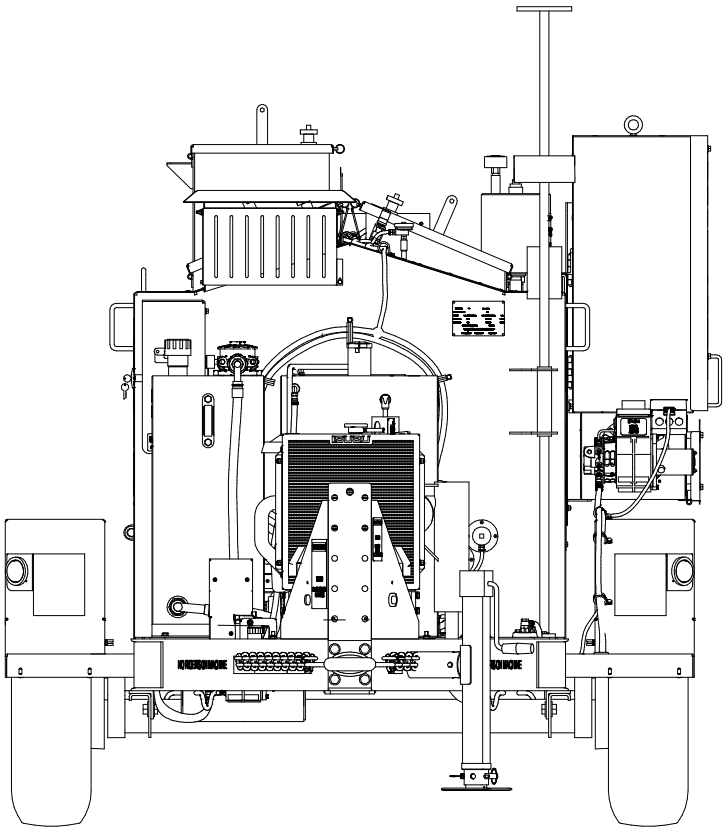

Patcher 4 Operator/Part Manual

Machine Views

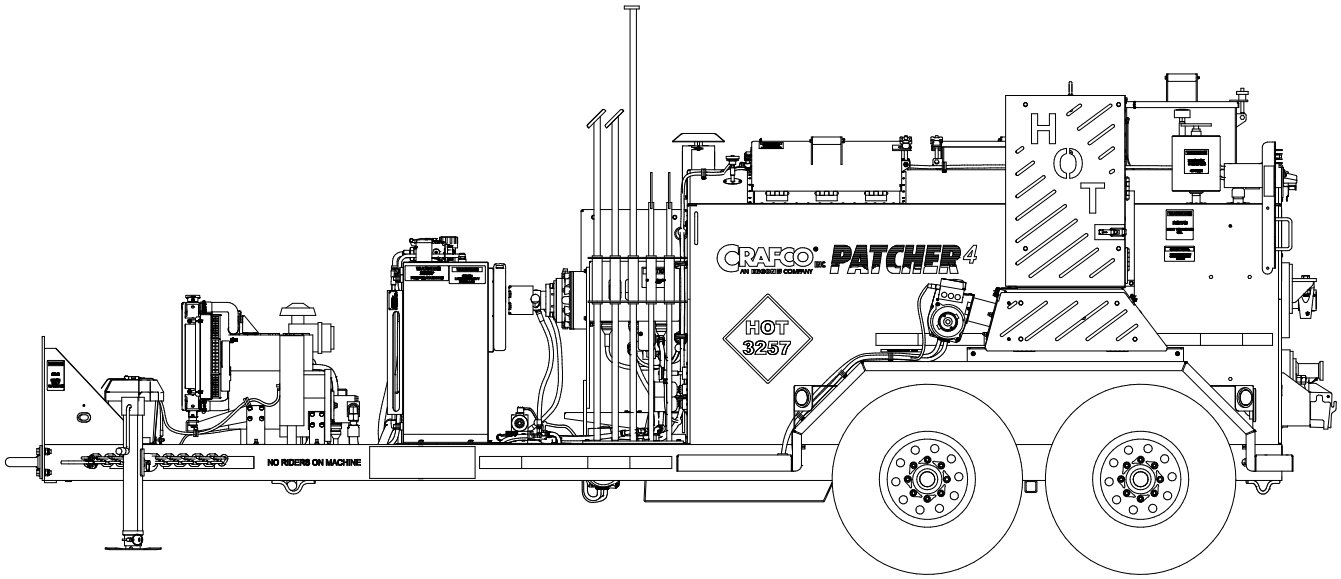

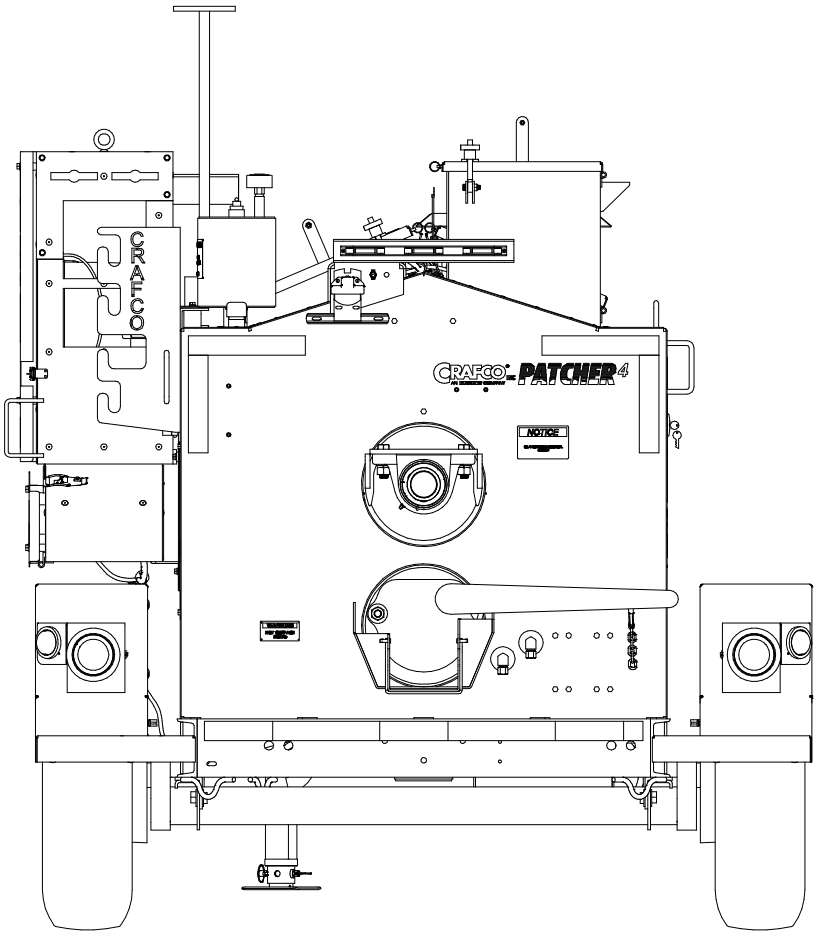

CRAFCO PRESERVATION PRODUCTS

Patcher 4 Operator/Part Manual

Table of Contents

Contents

1.0 About This Manual 1-1
1.1 How to use this Manual 1-1
2.0 Safety Precautions 2-1
2.1 General Safety 2-1
2.2 Personal Safety 2-1
2.3 Equipment or Operational Safety 2-1
2.4 California Proposition 65 2-3
2.4.1 All Crafco Equipment 2-3
2.4.2 All Crafco Equipment using a Diesel Engine 2-3
2.5 Towing or Driving for Transporting with Burner On 2-3
2.6 Safety Symbols and Notices 2-4
3.0 Limited Warranty 3-1
3.1 Warranty Claim Instructions 3-2
4.0 Machine Specifications 4-1
5.0 Operating Instructions 5-1
5.1 Introduction 5-1
5.2 Preparing the Machine for Start Up 5-1
5.3 Starting the Engine and Burner 5-5
5.4 Altitude Compensation System 5-7
5.5 Loading Material into Material Tank 5-7
5.6 Agitator Function 5-9
5.7 Dispensing the Material 5-11
5.8 Shutting Down and Cleaning Out the Machine 5-11
5.9 Storing the Machine 5-13
5.10 Overnight Heaters 5-13
5.11 Hot Applied Patching Material Placement 5-14
5.11.1 Application Steps 5-15
5.12 Heated Toolbox Operation 5-17
5.13 Material Tank Depth to Capacity Chart 5-19
5.14 Removing Optional Heated Chute 5-20
5.15 Mounting a Skid Machine 5-24
6.0 Maintenance Instructions 6-1
6.1 Engine 6-1

Table of Contents

6.2 Hydraulic System 6-1
6.3 Heat Transfer Oil 6-1
6.4 Mixer Packing Gland Seals 6-1
6.5 Mixer Shaft Bearings 6-1
6.6 Material Sensor Tube 6-1
6.7 Lug Nuts 6-1
6.8 Wheel Bearing 6-2
6.9 Brakes 6-2
6.10 Tongue Jack 6-2
6.11 Water Separator (Isuzu Engine) 6-2
6.12 Temperature Control Calibration 6-2
6.13 Maintenance Chart 6-3
6.14 Service Instructions 6-5
6.15 Recommended Fluids and Lubricants 6-5
6.16 General Maintenance Parts 6-6
6.17 Recommended Spare Parts 6-6
6.18 Applicable Brands of Heat Transfer Oil 6-7
6.19 Typical Heat Transfer Oil Specifications 6-7
6.20 Changing the Heat Transfer Oil 6-8
6.21 Adjusting the Discharge Gate 6-9
6.22 Adjusting and Replacing Mixer Shaft Packing 6-10
6.23 Cleaning Material Tank and Sensor Area 6-11
6.24 Cleaning the Melter 6-11
6.25 Burner Fuel Filter Replacement 6-11
7.0 How to Use a Multimeter 7-1
7.1 Checking DC Voltage with a Multimeter 7-1
7.2 Checking Resistance (Ohms) 7-1
7.2.1 How to Check Wire Continuity 7-1
7.2.2 How to Check RTD Sensor 7-1
7.3 Checking Amperage 7-2
8.0 Troubleshooting 8-1
8.1 Burner Troubleshooting 8-1
8.1.1 Symptom: Burner will Not Ignite 8-1
8.2 Burner Lights but Shuts Down After 15 Seconds 8-6

Table of Contents

8.3 Electrical Schematic 8-7
8.4 Thermostat (Oil/Material LCD Display) Troubleshooting 8-8
8.5 Testing the DC Controller 8-9
8.6 Fuel Solenoid Troubleshooting 8-9
8.7 Ignition Coil Troubleshooting 8-10
8.8 Bleeding the Diesel Burners 8-10
8.9 Smoke Coming Out of the Exhaust Stack 8-11
8.10 Burner Electrode Adjustment 8-12
8.11 Burner Air Settings 8-12
8.12 Material is Heating Slowly 8-13
8.13 Mixer Troubleshooting 8-13
8.13.1 Symptom: Mixer Does Not Rotate 8-13
8.14 Mixer Hydraulic Troubleshooting 8-17
8.15 Hydraulic Schematic 8-19
8.16 RTD Sensor Ohms vs. Temperature 8-20
8.17 Engine Event History Log 8-22
8.17.1 How to Access Engine “Event History” in Digital Engine Controller for Non_ECU (Electronic Control Unit) Controlled Melters 8-22
9.0 About the Illustrated Parts List 9-1
9.1 Ordering Crafco Parts 9-1
9.2 Patcher 4 Parts List 9-2
9.3 Fuel and Hydraulic Tanks Parts List 9-8
9.4 Engine Parts List 9-10
9.5 Hydraulic Schematic and Parts List 9-12
9.6 Hydraulic Valve Parts List 9-16
9.7 Hitch Parts List 9-17
9.8 Diesel Fuel Line Schematic 9-18
9.9 Main Diesel Burner Parts List (P/N 46380) 9-20
9.10 Toolbox Diesel Burner Parts List (P/N 57485N) 9-21
9.11 Control Box Parts List (P/N 47265N) 9-22
9.12 Electrical Wiring Harness Parts List 9-24
9.13 Electrical Schematic Parts List 9-26
9.14 Heated Toolbox Parts List (P/N 57450N) 9-28
9.15 Optional Material Chute Parts List (P/N 56895N) 9-30
9.16 Optional Heated Chute Parts List (P/N 56890N) 9-32

Table of Contents

9.17 Hydraulic Schematic for Optional Heated Chute 9-36
9.18 Heated Chute Pump and Motor Assembly (P/N 41696) 9-40
9.19 Patcher 4 Options 9-42
10.0 Tools and Accessories 10-1

List of Figures

Figure 5-1 Hydraulic and Diesel Fill Caps 5-2
Figure 5-2 Hydraulic Fluid Level and Temp Gauge 5-3
Figure 5-3 Heat Transfer Oil Dipstick 5-3
Figure 5-4 Discharge Gate 5-4
Figure 5-5 Mixer & Engine Speed Switch 5-4
Figure 5-6 Mixer Bearings 5-5
Figure 5-7 Control Panel 5-6
Figure 5-8 Loading Material Using the Lid 5-8
Figure 5-9 Lid Hold Down/Lid Pins 5-8
Figure 5-10 Flow Control Knob 5-9
Figure 5-11 Control Panel – Mixer Switch 5-10
Figure 5-12 Heated Toolbox 5-18
Figure 5-13 Material Tank Depth to Capacity Chart 5-19
Figure 5-14 Optional Heated Chute Components (P/N 56890N) 5-22
Figure 5-15 Heated Chute Temporary Removal View 5-23
Figure 5-16 Heated Chute Complete Removal View 5-23
Figure 6-1 Lug Bolt Tightening Sequence 6-1
Figure 6-2 Temperature Control Calibration 6-2
Figure 6-3 Heat Transfer Oil Drain Plug and Fill Ports 6-8
Figure 7-1 Standard Multimeter 7-2
Figure 7-2 Clamp-On Amp Meter/Multimeter 7-3
Figure 8-1 Electrical Schematic (PN 26582P4) 8-7
Figure 8-2 Diesel Burner Electrode Adjustment 8-12
Figure 8-3 Diesel Burner Air Settings 8-12
Figure 8-4 Checking Din Plug Voltage 8-16
Figure 8-5 Hydraulic Pressure Adjustment Location 8-18
Figure 8-6 Din Plug Layout 8-18
Figure 8-7 Hydraulic Schematic (P/N 56690N) 8-19
Figure 9-1 Right ISO View 9-2
Figure 9-2 Left ISO View 9-4
Figure 9-3 Top Section View 9-6
Figure 9-4 Fuel and Hydraulic Tanks Section View 9-8
Figure 9-5 Engine 47129N Isuzu Diesel 9-10
Figure 9-6 Hydraulic Schematic (P/N 56690N) 9-12
Figure 9-7 Hydraulic Schematic (PN 56690N) (continued) 9-14
Figure 9-8 Hydraulic Valve 9-16
Figure 9-9 Hitch 9-17
Figure 9-10 Diesel Fuel Line Schematic (P/N 26599) 9-18
Figure 9-11 Main Diesel Burner (P/N 46380) 9-20

List of Figures

Figure 9-12 Toolbox Diesel Burner (P/N 57485N) 9-21
Figure 9-13 Control Box Parts List (P/N 47265N) 9-22
Figure 9-14 Electrical Wiring Harness Parts List 9-24
Figure 9-15 Electrical schematic parts list (P/N 26582P4) 9-26
Figure 9-16 Heated Toolbox Parts List (P/N 57450N) 9-28
Figure 9-17 Optional Material Chute (P/N 56895N) 9-30
Figure 9-18 Optional Heated Chute (P/N 56890N) 9-32
Figure 9-19 Optional Heated Chute Parts List (continued) 9-34
Figure 9-20 Hydraulic Schematic for Optional Heated Chute 9-36
Figure 9-21 Hydraulic Schematic for Optional Heated Chute (continued) 9-38
Figure 9-22 Heated Chute Pump and Motor Assembly (P/N 41696) 9-40
Figure 9-23 Patcher 4 Options 9-42
Figure 9-24 Patcher 4 Options 9-44

List of Tables

Table 2-1 Safety Symbols and Notices 2-4
Table 2-2 Safety Symbols and Notices (continued) 2-5
Table 4-1 Machine Specifications 4-1
Table 5-1 Preparing the Machine for Start Up 5-1
Table 5-2 Preparing the Machine for Start Up (continued) 5-2
Table 5-3 Starting the Engine and Burner 5-5
Table 5-4 Loading Material into the Material Tank 5-7
Table 5-5 Proper Use of the Agitator 5-9
Table 5-6 Proper Use of the Agitator (continued) 5-10
Table 5-7 Dispensing the Material 5-11
Table 5-8 Shutting Down and Cleaning Out the Machine 5-12
Table 5-9 Overnight Heaters 5-13
Table 5-10 Overnight Heaters (continued) 5-14
Table 5-11 Application Steps 5-15
Table 5-12 Application Steps (continued) 5-16
Table 5-13 Heated Toolbox Operation 5-17
Table 5-14 Heated Toolbox Operation (continued) 5-18
Table 5-15 Temporary Removal of Optional Heated Chute 5-20
Table 5-16 Complete Removal of Optional Heated Chute 5-21
Table 5-17 Mounting a Skid Machine 5-24
Table 6-1 Maintenance Chart 6-3
Table 6-2 Maintenance Chart (continued) 6-4
Table 6-3 Service Instructions 6-5
Table 6-4 Recommended Fluids and Lubricants 6-5
Table 6-5 General Maintenance Parts 6-6
Table 6-6 Recommended Spare Parts 6-6
Table 6-7 Applicable Brand of Heat Transfer Oil 6-7
Table 6-8 Typical Heat Transfer Oil Specifications 6-7
Table 6-9 Changing the Heat Transfer Oil 6-8
Table 6-10 Adjusting the Discharge Gate 6-9
Table 6-11 Adjusting and Replacing Mixer Shaft Packing 6-10
Table 6-12 Burner Fuel Filter Replacement 6-11
Table 8-1 Burner Basic Visual Troubleshooting 8-1
Table 8-2 Burner Electrical Troubleshooting Part 1 8-2
Table 8-3 Burner Lights but Shuts Down After 15 Seconds 8-6
Table 8-4 Thermostat (Oil/Material) Troubleshooting 8-8
Table 8-5 Testing the DC Controller 8-9
Table 8-6 Fuel Solenoid Troubleshooting 8-9
Table 8-7 Ignition Coil Troubleshooting 8-10

List of Tables

Table 8-8 Bleeding the Diesel Burners 8-10
Table 8-9 Smoke Coming Out of the Exhaust Stack 8-11
Table 8-10 Burner Air Settings 8-12
Table 8-11 Material is Heating Slowly 8-13
Table 8-12 Mixer Basic Visual Troubleshooting 8-13
Table 8-13 Mixer Basic Visual Troubleshooting (continued) 8-14
Table 8-14 Mixer Electrical Troubleshooting 8-14
Table 8-15 Mixer Electrical Troubleshooting (continued) 8-15
Table 8-16 Mixer Electrical Troubleshooting (continued) 8-16
Table 8-17 Mixer Hydraulic Troubleshooting 8-17
Table 8-18 RTD Sensor Ohms vs. Temperature 8-20
Table 9-1 Right Iso View Parts List 9-3
Table 9-2 Left View Parts List 9-5
Table 9-3 Top Section View Parts List 9-7
Table 9-4 Fuel and Hydraulic Tanks Parts List 9-8
Table 9-5 Engine Parts List 47129N Isuzu Diesel 9-11
Table 9-6 Hydraulic Parts List 9-13
Table 9-7 Hydraulic Parts List (continued) 9-15
Table 9-8 Hydraulic Valve Parts List 9-16
Table 9-9 Hitch Parts List 9-17
Table 9-10 Diesel Fuel Line Schematic Parts List 9-19
Table 9-11 Main Diesel Burner Parts List (P/N 46380) 9-21
Table 9-12 Toolbox Diesel Burner (P/N 57485N) 9-21
Table 9-13 Control Box Parts List (P/N 47265N) 9-23
Table 9-14 Electrical Wiring Harness Parts List 9-24
Table 9-15 Electrical Schematic Parts List 9-27
Table 9-16 Heated Toolbox Parts List (P/N 57450N) 9-29
Table 9-17 Optional Material Chute Parts List (56895N) 9-31
Table 9-18 Optional Heated Chute Parts List (56890N) 9-33
Table 9-19 Optional Heated Chute Parts List (continued) 9-35
Table 9-20 Hydraulic Schematic for Optional Heated Chute Parts List 9-37
Table 9-21 Hydraulic Schematic for Optional Heated Chute Parts List (continued) 9-39
Table 9-22 Heated Chute Pump and Motor Assembly Parts List 9-41
Table 9-23 Options Parts List 9-43
Table 9-24 Options Parts List (continued) 9-45

Chapter 1 Introduction

1.0 About This Manual

This manual is supplied with each new Crafco Patcher 4. The manual assists your machine operators with the proper use of the Patcher 4 and provides information about the machine's mechanical functions.

Your Crafco Patcher 4 is specially made to give excellent service and save on maintenance expense. However, as with all specially engineered equipment, you will get the best results at minimum cost if you:

- Operate your machine as instructed in this manual.
- Maintain your machine regularly as stated in this manual.

1.1 How to use this Manual

This manual is formatted to start each new chapter on the right page. There may be a blank page on the left page if the previous chapter ends on the right page.

If you are viewing this in a digital format (PDF) the following features are available:

1. The Table of Contents, List of Tables, and List of Figures are all hyperlinks, when left mouse clicked on section, table, or figure you will be sent to that page.
2. The blue highlighted text throughout the manual is a hyperlink, when left mouse clicked you will be sent to that page, table, or figure.
3. The panel to the left in the PDF is a bookmarks panel, if you left mouse click on any section/heading in the bookmarks panel you will be sent to that page.
4. There is an attachments icon (paper clip) to the left of the bookmarks, this is where you will find full size prints of the control box, electrical, and hydraulic schematics if available.

©2026 by Crafco, Inc. All Rights Reserved

Chapter 2 Safety Precautions

2.0 Safety Precautions

For more in-depth safety information, please see Safety Manual (PN 26221) which comes with the machine. Or contact your nearest authorized Crafco Distributor at crafco.com/Distributors.

2.1 General Safety

- Crafco assumes no liability for an accident or injury incurred through improper use of the machine.
- Read this manual thoroughly before operating the machine.
- Obey all CAUTION and WARNING signs posted on the machine.
- Make sure an operator fully knows how to operate the machine before using the machine.

2.2 Personal Safety

- The high operating temperatures of this machine and the material it contains requires that protective clothing, gloves, hard-soled shoes, and safety glasses or a face shield be worn at all times by operators of the machine.
- Pay attention to the surfaces you walk and work on, and look out for hazards like uneven ground, spills, other equipment, and debris. Keep your vision clear and the working area clear of obstructions.
- Prevent water from going into any part of the machine. If there is indication of water in the heat transfer oil system, warm heating oil to 250-300°F for 2 to 3 hours.
- Bodily contact with hot material or heat transfer oil can cause severe burns.
- If the mixer is not stopped before adding solid material, hot material can get on an operator's body and cause severe burns.
- Keep hands, feet, and clothing away from all moving parts.
- Never attempt to clean out tank with machine on and engine running.
- Never operate the machine without guards in place.
- When maintaining, cleaning or repairing machine, make sure the battery is disconnected to prevent accidental energizing and operation of machine, and have a second person or guarding available to monitor and prevent access to the machine.
- Do not operate the machine when there is a chance of lightning discharge in the atmosphere.

2.3 Equipment or Operational Safety

- Do not operate the machine in buildings or work areas that do not have sufficient airflow.
- Shut down the burner and the engine before refilling the fuel tank.
- Make sure the mixer stops before adding solid material to the material tank. Lift the lid, place the material on the lid and close the lid. The mixer should start automatically.
- Always keep a correctly maintained fire extinguisher near the machine and know how to use it.
- DO NOT heat transfer oil to a temperature of more than 525°F.
- DO NOT put too much heat transfer oil in the reservoir. The expansion of oil while it heats up can cause overflow. With the machine on level ground, check the oil each day before starting the burner. Add oil to the top mark on the dipstick if required (at 70°F). Use only

©2026 by Crafco, Inc. All Rights Reserved

recommended heat transfer oil. Change the oil after 500 hours of machine operation, or one year, whichever comes first.

- Follow the operating instructions for starting and shutting down the burner.
- Calibrate the temperature control knobs after each 50 hours of machine operation. Refer to Figure 6-2 Temperature Control Calibration
- Replace any hoses which show signs of wear, fraying or splitting.
- Make sure all fittings and joints are tight and do not leak each time the machine is used.
- Make sure battery cover is secure, and cables are not damaged before operation.
- Do not leave the machine unattended while the burner is lit.
- Tighten all bolts and screws every 100 hours of machine operation.

©2026 by Crafco, Inc. All Rights Reserved

2.4 California Proposition 65

The state of California currently maintains a list of chemicals that can cause cancer, birth defects or other reproductive harm. Your Crafco equipment comes with the following warnings:

2.4.1 All Crafco Equipment

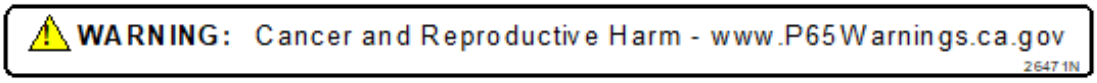

2.4.2 All Crafco Equipment using a Diesel Engine

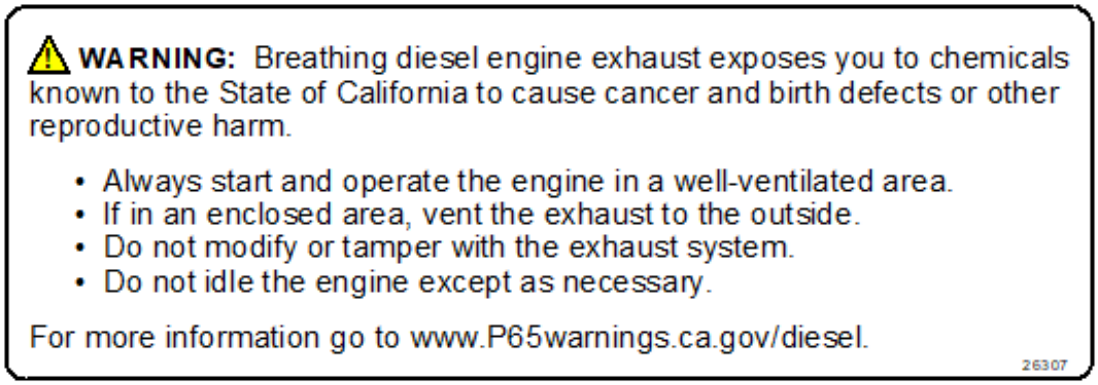

2.5 Towing or Driving for Transporting with Burner On

The burner in your Crafco machine is designed for operation only while the unit is parked or towed at slow speeds while applying sealant at a jobsite. When driving or towing this machine for transport, the burner shall be turned off. Operating the burner when transporting the machine is a violation of The Code of Federal Regulations, CFR Title 49, Part 392, Subpart G, 392.67 and may cause damage to the burner and/or machine.

CAUTION
The burner in your Crafco machine is designed for operation only while the unit is parked or towed at slow speeds while applying sealant at a jobsite. **When driving or towing this machine for transport, the burner shall be turned off.**

©2026 by Crafco, Inc. All Rights Reserved

Chapter 2 Safety Precautions

2.6 Safety Symbols and Notices

Important safety symbols and notices are marked on the machine and in this manual. Failure to comply could result in equipment damage, operational malfunction, severe injury, or death. Please read and comply with all symbols and notices. The table below includes the most commonly used symbols and notices.

Table 2-1 Safety Symbols and Notices

Symbol	Item	Remarks
WARNING	Warning	Refers to possible bodily injury or death.
CAUTION	Caution	Refers to possible equipment damage or operational malfunction.
	Severe Burn Hazard	Hot material can cause severe burns.
	Protective Shoes	Wear hard-soled work shoes.
	Protective Gloves	Wear heat resistant gloves.
	Protective Face or Eye Wear	Wear face shield or safety glasses.
	Body Crush Hazard	Do not stand between trailer and hitch when hooking melter to truck.

©2026 by Crafco, Inc. All Rights Reserved

Chapter 2 Safety Precautions

Table 2-2 Safety Symbols and Notices (continued)

Symbol	Item	Remark
	Crush Hazard	Keep feet and legs clear.
	Pinch Hazard	Keep hands and feet clear.
	Moving Machinery	Never reach into moving machinery.
	Exhaust Hazard	Avoid breathing engine exhaust.
	Noise Hazard	Ear protection is advisable.
	Read Manual	Read and understand operator and safety manuals before operating machine.

©2026 by Crafco, Inc. All Rights Reserved

Chapter 3 Warranty Information

3.0 Limited Warranty

Crafco (Manufacturer), or one of its affiliated distributors, will replace for the original purchaser free of charge any parts found upon examination by the Manufacturer, to be defective in material or workmanship. This warranty is for a period of **two years** from the invoice date, but excludes engine or components, tires, and battery as these items are subject to warranties issued by their manufacturers.

Crafco shall not be liable for parts that have been damaged by accident, alteration, abuse, improper lubrication/maintenance, normal wear, or other cause beyond our control.

The warranty provided herein extends only to the repair and/or replacement of those components on the equipment covered above and does not cover labor costs. The warranty does not extend to incidental or consequential damages incurred as a result of any defect covered by this warranty.

All transportation and labor costs incurred by the purchaser in submitting or repairing covered components must be borne by the purchaser. Crafco specifically disavows any other representation, warranty, or liability related to the condition or use of the product.

The warranty is valid only for parts which have been supplied or recommended by Crafco.

CAUTION
Use of replacement parts other than genuine Crafco parts may impair the safety or reliability of your equipment and nullifies any warranty.

©2026 by Crafco, Inc. All Rights Reserved

Chapter 3 Warranty Information

3.1 Warranty Claim Instructions

Crafco warrants parts and machinery purchased through Crafco, or one of its affiliated distributors for two years from the invoice date. Wear items are not covered under the Crafco limited warranty. A wear item is defined as but not limited to material pumps, sealing tips, tires, etc.

If parts fail to function within the two years of invoice date, a return authorization number (RA) must be obtained. If the part was purchased through Crafco, please contact Crafco returns department at Returns@Crafco.com for an RA number or if purchased through a Crafco distributor please contact your distributor.

Note: if the part has a serial number associated with it, for example; a machine or electric hose or wand, this must be furnished when requesting the RA number. The customer will be emailed or faxed an RA form with all instructions to return the item to Crafco. If the part is found to be within the two-year warranty period and has not been abused or modified, a credit will be issued to the customer's account or credit card. The customer may request the part be replaced instead of a credit, if desired.

Note: All engine warranties are covered through the engine manufacturer. If you need information for a distributor in your area, please contact us and we will direct you to the closest engine distributor.

All parts returned are tested and evaluated. If the part has been modified in any way without prior consent from a Crafco representative, warranty is void.

Please follow the instructions stated below when calling in a Warranty Claim. Failure to follow these procedures may be cause to void the warranty.

Call your local Crafco Distributor. If you do not know who your local distributor is, call a Crafco Customer Service Representative at 602-276-0406 or email CustomerService@Crafco.com for the name, location, and telephone number.

On contacting the distributor, be prepared to identify the serial number, model number, engine number, engine manufacturer, and the date of purchase if available.

Should the cause of the malfunction be a defective part, the Distributor will advise you of the procedure to follow for a replacement.

For expedited service, you can purchase the failed part at the time of setting up the return RA, so the part can be delivered to you sooner. Once we receive the failed part back and inspect it, we can credit you for the part if it was found to be defective.

If you have any additional questions regarding warranty repairs and parts, please do not hesitate to call 480-655-8333 or email Returns@Crafco.com.

For Warranty:

25527 South Arizona Avenue
Chandler, AZ 85248
Phone: (480) 655-8333
Returns@Crafco.com

For all other inquiries:
CustomerService@Crafco.com

©2026 by Crafco, Inc. All Rights Reserved

Chapter 4 Machine Specifications

4.0 Machine Specifications

Table 4-1 Machine Specifications

Specification	PN 56600N
Vat capacity	395 Gallons (1495.2 l)
Heat transfer oil required	50 Gallons (189.2 l) at 70°F
Tank construction	Double boiler type
Tank opening size	2 material openings 16” (406mm) x 24” (610mm)
Bucket Opening Size	1 bucket opening 15.5” (394mm) x 18” (457mm)
Maximum heat input	411,000 BTUs
Burner and temperature control	Diesel-forced air thermostatic control
Engine, Diesel	Isuzu 3-cyl Model 3CJ1 19 HP @3000 RPM
Drive Mechanism	All hydraulic with infinite forward and reverse speed control
Mixer	Horizontal shaft with 8 sweep paddles
Dry Weight	Approximately 7,075 lbs. (3209.2 kg)
Shipping Weight	Approximately 7,500 lbs. (3401.9 kg)
Diesel Tank Capacity	32 Gallons (121.0 l)
Hydraulic Tank Capacity	20 Gallons (75.7 l)
Axle Capacity	Dual 7,500 lbs. (3401.9 kg)
Tires	ST235/85R16, Load Range G

©2026 by Crafco, Inc. All Rights Reserved

Chapter 5 Operating Instructions

5.0 Operating Instructions

5.1 Introduction

The Crafco Patcher 4 was developed to melt Crafco TechCrete, Mastic One, Matrix 501 and PolyPatch products.

Note: DO NOT attempt to operate the machine without using these and all other instructions.

5.2 Preparing the Machine for Start Up

Table 5-1 Preparing the Machine for Start Up

Step	Action
1	Fill the fuel tank with diesel fuel. Note: Refer to the manufacturer's instruction manual for more specifications on fuel requirements.
2	Check the oil level in the engine crankcase. Refer to the manufacturer's instruction manual for the engine.
3	Check the hydraulic fluid level while at a temperature of 70°F. Add fluid if necessary. See Figure 5-2 Hydraulic Fluid Level and Temp Gauge
4	With the machine on level surface, check the heat transfer oil level while at a temperature of 70°F. The oil should be at the full mark on the dipstick. DO NOT overfill or spillage may occur when the oil is heated and expands. See Figure 5-3 Heat Transfer Oil Dipstick
5	Make sure discharge gate is in the closed position. See Figure 5-4 Discharge Gate
6	Place the "MIXER" switch in the "OFF" position and the "ENGINE SPEED" switch in the "IDLE" position. See Figure 5-5 Mixer & Engine Speed Switch
7	Make sure all toggle switches are turned "OFF" and all temperature control dials are set to their minimum settings.
8	Grease both front and rear mixer bearings weekly. See Figure 5-6 Mixer Bearings
9	Make sure the fuel valve on the water separator is set to "ON".
10	Make sure the main burner and toolbox burner fuel shut off valves are open.
11	If the unit is equipped with a Heated Chute, verify that both hot oil supply valves are open.
	CAUTION
	DO NOT operate the machine without the Heated Chute supply valves in the open position. The hot oil pump operates anytime the engine is running. Running the engine with one or both the valves closed will damage the hot oil pump and could damage the heated chute. The only time the valves can be closed is to perform maintenance, chute removal when the machine is off (see section 5.14) and emergency situations to stop flow of oil if a leak were to develop. If a leak were to develop during operation, immediately shut down the engine then close the ball valves. Do not start the engine until the leak has been repaired.

©2026 by Crafco, Inc. All Rights Reserved

Table 5-2 Preparing the Machine for Start Up (continued)

Step	Action
	WARNING
	The safe operation of this machine is the operator's responsibility. Use extreme care when operating this machine; safety is the result of being careful and paying attention to details. Remember the diesel flame is approximately 2,200°F. Some exposed parts of the machine reach 500°F, the material 400°F, and the hydraulic fluid 200°F. Always put on protective clothing, gloves, hard-soled shoes, and safety glasses or a face shield. Be sure that all joints and fittings are tight and leak proof. Immediately replace any hose, which shows any signs of wear, fraying, or splitting. Tighten all bolts, nuts, and screws every 100 hours.

Figure 5-1 Hydraulic and Diesel Fill Caps

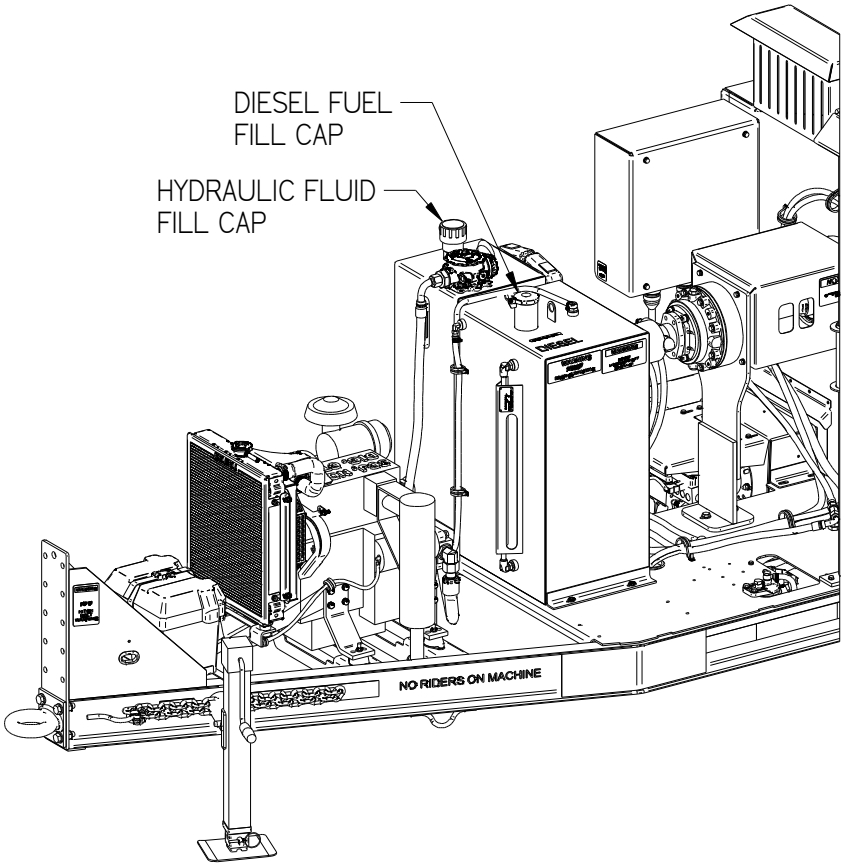

©2026 by Crafco, Inc. All Rights Reserved

Figure 5-2 Hydraulic Fluid Level and Temp Gauge

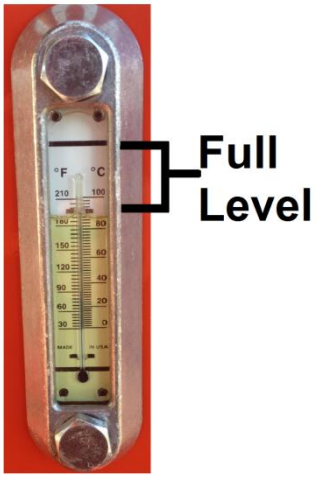

Figure 5-3 Heat Transfer Oil Dipstick

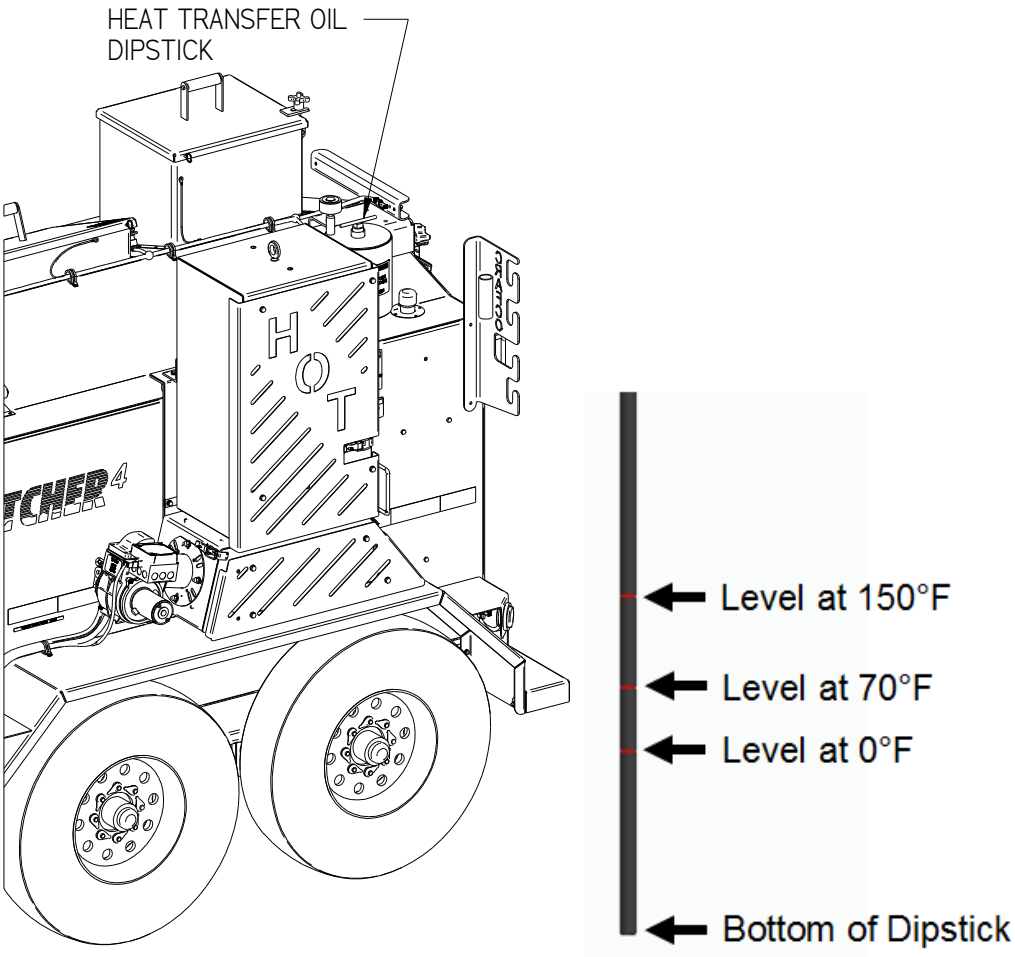

©2026 by Crafco, Inc. All Rights Reserved

Figure 5-4 Discharge Gate

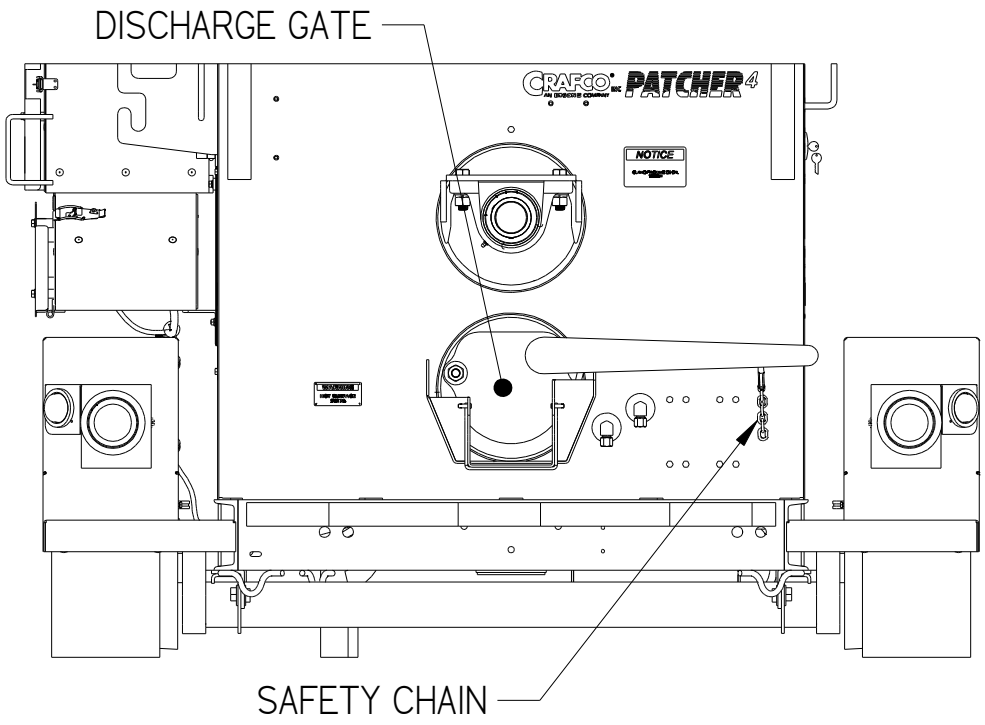

Figure 5-5 Mixer & Engine Speed Switch



©2026 by Crafco, Inc. All Rights Reserved

Figure 5-6 Mixer Bearings

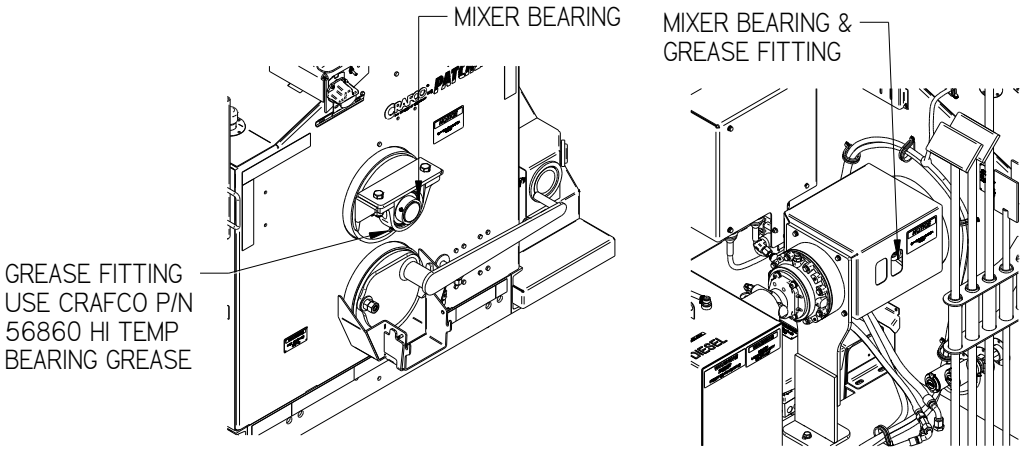

5.3 Starting the Engine and Burner

Table 5-3 Starting the Engine and Burner

Step	Action
1	Fully open the exhaust stack cover.
2	Turn the key to the “ON” position. Allow engine controller to boot up. Set “ENGINE SPEED” switch to “IDLE”. To start the engine, press “AUTO” then “RUN”. Engine will preheat then start. Leave at idle when heating up the heat transfer oil and/or material. When you are ready to agitate and need more engine power, flip the “ENGINE SPEED” switch to “FAST”.
3	Turn the “BURNER” switch in the control box to the “ON” position. The red light marked “BURNER” will illuminate indicating that the material and hot oil temperatures are below set point and the burner will operate. When the red light goes off this indicates the material or oil temperatures are up to the set point and the burner is not currently needed or operating. **Note:** Under normal circumstances, when the burner light is on, the burner should be running, and when the light is off, the burner will be off. If there is a burner malfunction, the light could be on while the burner is off.
4	Set the heat transfer oil temperature to 525°F. See Figure 5-7 Control Panel
5	Set the material temperature to the manufacturer’s recommended temperature.
	CAUTION
	If the burner fails ignition after 3 attempts the “BURNER LOCKOUT” alarm will sound. To reset burner, hold the “RESET” toggle switch in the “DOWN” position for 5 seconds, then release. If the burner still does not ignite, refer to Table 8-1 Burner Basic Visual Troubleshooting to determine the cause of the malfunction.
	Important: The solid material in the tank melts first around the walls and bottom of the tank. The material temperature sensor is located by the wall; therefore, it is possible that at the beginning of the melting process the indicated temperature reaches operating value, but the material closer to the center of the tank is still solid. This is normal.
6	Allow the heat transfer oil to continue to heat.

©2026 by Crafco, Inc. All Rights Reserved

Figure 5-7 Control Panel

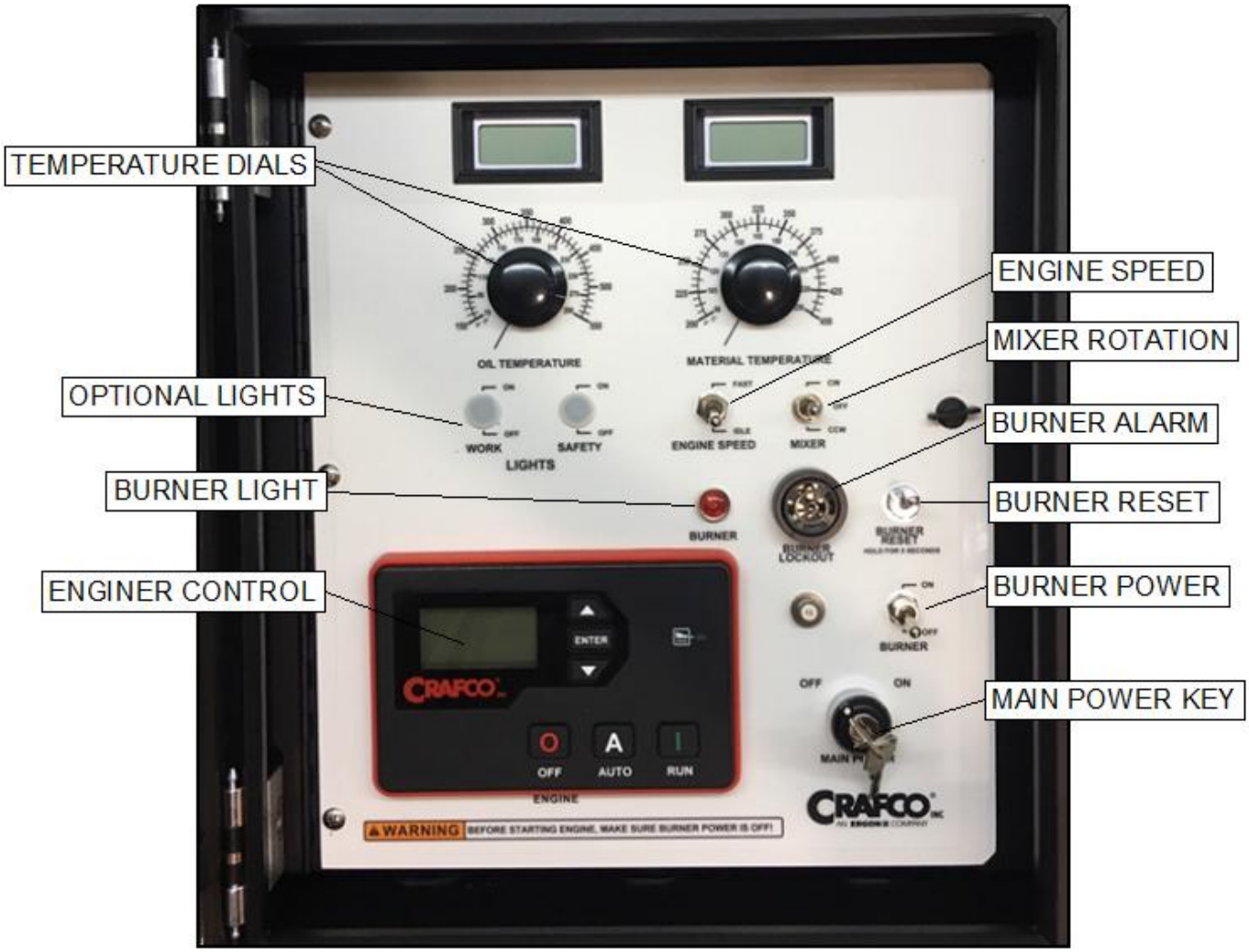

5.4 Altitude Compensation System

This unit may be equipped with an Altitude Compensation System. If so, there will be a small, boxed housing mounted on the engine mount cross member. The system is automatic during most operating conditions. However, if the machine is taken from above or below an altitude of 2,624 ft. (800 Meters) while the engine is running, the engine will need to be stopped and then restarted. There is a yellow indicator light that illuminates when the machine is above 2,624 ft. (800 Meters) indicating that the system is active. For units that do not have it, they may run a little rough and smoke from the exhaust when started at high altitudes when cold. Once warm, they will operate normally.

5.5 Loading Material into Material Tank

This unit is equipped with a safety interlock system on the loading door. This system disables the mixer hydraulic system when the lid is open. This is a safety feature for the operator and should never be disabled for any reason. Note: Units with the European Spec are not equipped with this system.

WARNING
Personal injury could occur if this safety system is disabled.

Table 5-4 Loading Material into the Material Tank

Step	Action
	**WARNING** Following this procedure prevents hot material from getting on operators and causing severe burns.
1	To load material into the material tank, first open the lid. Note: The mixer stops when the lid is opened to load solid material into the material tank. European Spec units need to manually stop the mixer before opening the lid.
2	Place the solid material on the lid, then close the lid. Add the desired amount of material. Not more than 24 at a time, without mixing and heating the material. Figure 5-8 Loading Material Using the Lid
3	Flip the “ENGINE SPEED” switch to “FAST”. Engage the mixer by flipping the “MIXER SWITCH” to “CW” for clockwise or “CCW” for c ’clockwise rotation.
	Note: If blocks of solid material are added too quickly, jamming results and slows down the melting process. The mixer switch can be moved for opposite rotation if needed.
4	The speed of mixing is controlled by the Flow Control Valve. See Figure 5-10 Flow Control Knob. To adjust the speed, rotate the knob to the desired setting.
5	Allow the mixer to continually rotate as you add blocks, and while the machine is in use. It will help keep the aggregate suspended in the mixture. Note: If you do not run the mixer, the aggregate will settle to the bottom and produce low quality patches.

©2026 by Crafco, Inc. All Rights Reserved

Step	Action
	CAUTION
	A block of material could cause the lid to open while it is mixing. If this happens, it will automatically stop the mixer. You will need to open the lid and use a scraping tool to push it back down in the tank. You may need to change the direction of the mixer using the control switch, so it pulls the block back down into the tank after the lid is closed. Use the lid hold-downs to help prevent this. See Figure 5-9 Lid Hold Down/Lid Pins

Figure 5-8 Loading Material Using the Lid

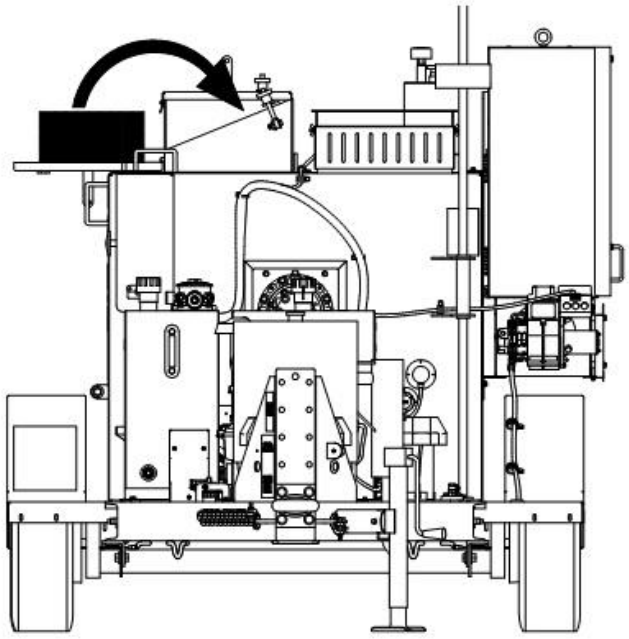

Figure 5-9 Lid Hold Down/Lid Pins

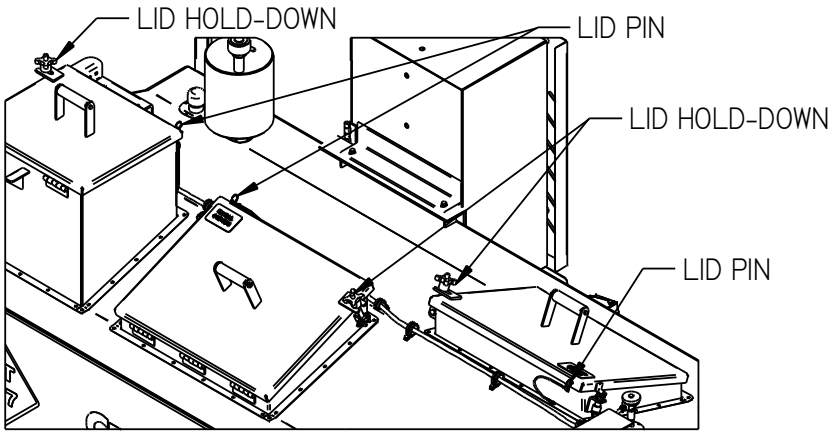

©2026 by Crafco, Inc. All Rights Reserved

Figure 5-10 Flow Control Knob

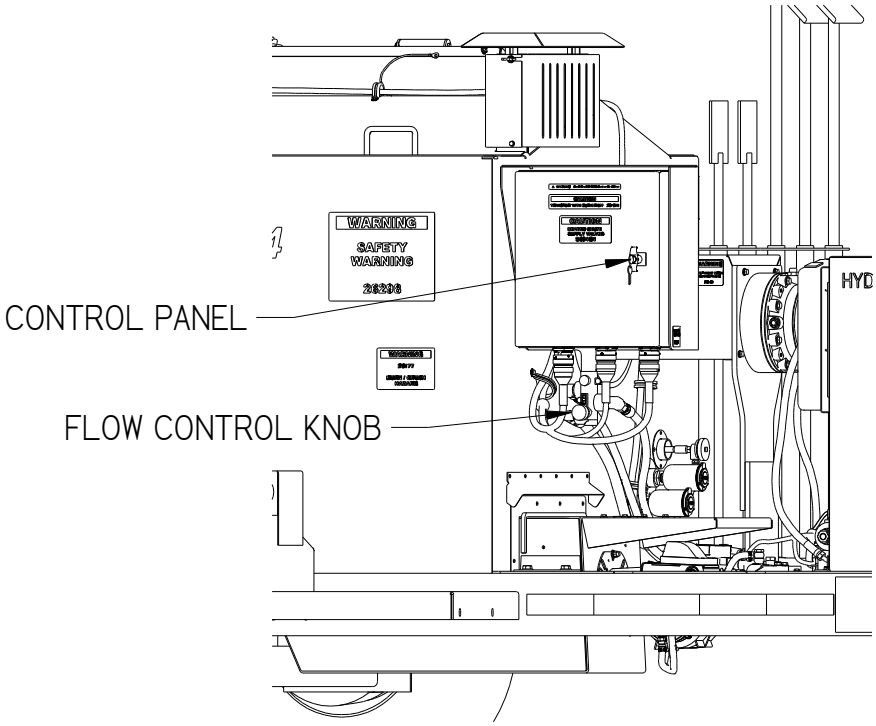

5.6 Agitator Function

The Patcher 4 agitator was designed to have a dual purpose function. When operating the agitator in CW (clockwise rotation), also labeled as “MIX”, the agitator is in mix mode and is used when mixing/melting material prior to pouring.

When operating the agitator in the CCW (counterclockwise rotation), also labeled as “Dispense”, the agitator is in dispense mode and is used to help facilitate moving material to the gate at low tank levels. Reference Figure 5-11 Control Panel – Mixer Switch

Table 5-5 Proper Use of the Agitator

Step	Action
1	Begin by adding material blocks according to Table 5-4 Loading Material into the Material Tank
2	When melting and bringing the material to temperature, the agitator should be mainly operated in CW/MIX rotation to ensure proper mixing of the material. If jamming occurs, the agitator can and should be reversed, but once able to do so, the agitator should be returned to CW/MIX rotation.
	CAUTION
	Do not operate the mixer in the CCW/Dispense mode for too long of a period while melting/mixing material. Doing so may not properly mix the aggregate into the binder and leave areas in the tank that are thick with aggregate and other areas “runny” with binder.

©2026 by Crafco, Inc. All Rights Reserved

Table 5-6 Proper Use of the Agitator (continued)

Step	Action
3	When material has completely melted and application temperature has been reached and pouring has begun, the agitator can be switched to the CCW/DISPENSE mode.
4	If doing a slow pour or pouring into buckets or a material handler, the agitator should be left in the CW/MIX mode until there is no longer enough head pressure to keep material flowing out of the gate. When the material level is getting low and the flow of material has slowed out of the gate, the agitator should be moved to the CCW/DISPENSE mode to help move the remaining material out of the gate opening.
	CAUTION
	If there should be a need to add blocks to a partially full tank, then the agitator should be in the CW/MIX mode. All pouring should stop until the added blocks have had sufficient time to melt and mix in with the existing material.

Figure 5-11 Control Panel – Mixer Switch

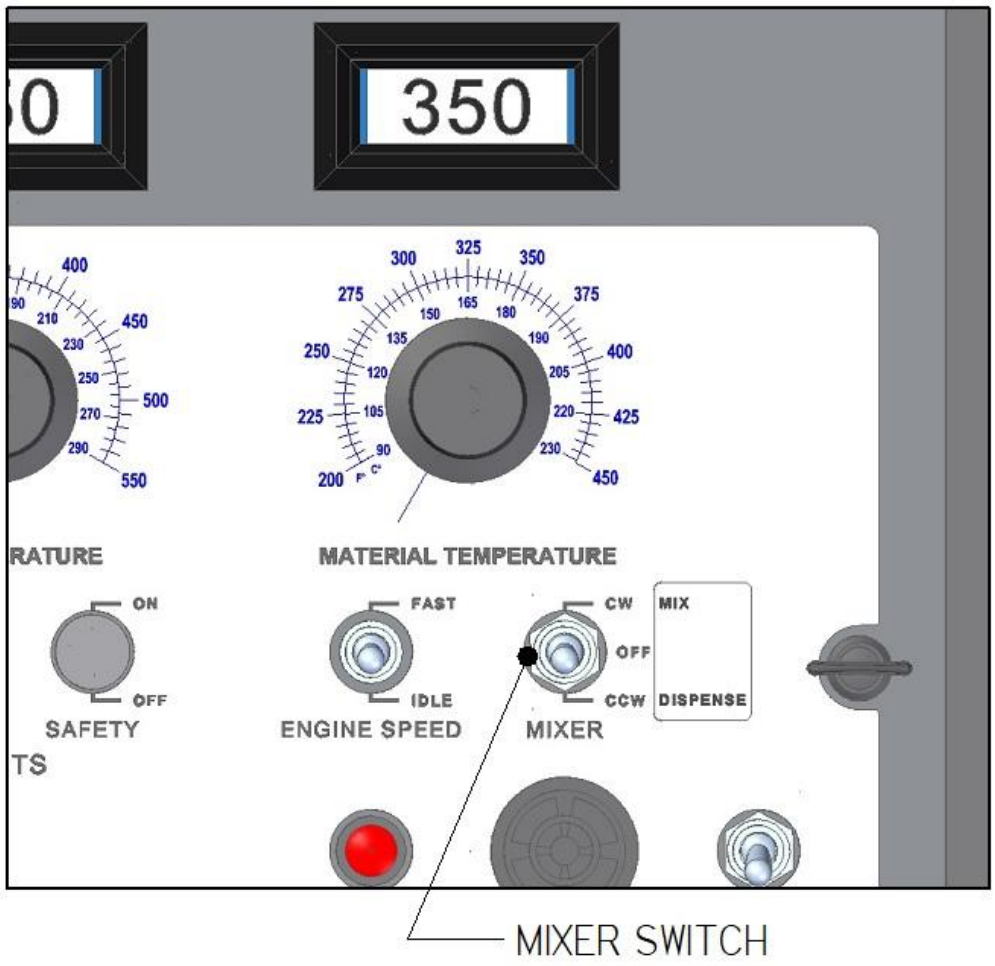

©2026 by Crafco, Inc. All Rights Reserved

5.7 Dispensing the Material

Table 5-7 Dispensing the Material

Step	Action
	WARNING
	Put on protective clothing, gloves, hard-soled shoes, and face shield or safety glasses when operating or filling this machine. Read the entire manual before operating the machine. Hot material can cause severe burns.
1	Allow the material to reach proper operating temperatures according to the manufacturer. Ensure the mixture is fully melted and mixed thoroughly. Draw off material by moving the handle up on the discharge gate.
Important: The material temperature sensor is located by the wall where the heat is coming from. Because of this factor, the material temperature readout on the control panel could be reading higher than what the majority of the material is actually at. The readout should only be used as a guide. A handheld non-contact infrared thermometer should be used on a sample of dispensed material to determine if appropriate application temperature has been achieved. If the application temperature has not been reached, continue heating until it does.	

Table 5-4 Dispensing the Material (continued)

Step	Action
2	For the first pour after initial heat up, place a pour bucket under the chute hooking the handle on the end of the chute to hold it. Open the discharge gate and allow the poorly mixed material from the discharge tube to pour into the bucket until nicely mixed material starts to flow, then immediately close the discharge gate. Place the partially filled pour-bucket upside down into the rear material intake lid and allow the poorly mixed material to drain back into the tank.
3	Drain material into the patch, pour bucket, shoebox, or Hot Mastic Applicator.
4	Remove excess patching material from chute with scraping tool.

5.8 Shutting Down and Cleaning Out the Machine

When shutting down the machine for the day, Crafco recommends emptying all, if not most of the material before shutting down the machine. It will result in faster start up times in the morning, help keep the aggregate from settling at the bottom, and offer better material performance by using fresh material.

©2026 by Crafco, Inc. All Rights Reserved

Chapter 5 Operating Instructions

Table 5-8 Shutting Down and Cleaning Out the Machine

Step	Action
1	Turn “BURNER” switch to “OFF” position.
2	Turn “MIXER” switch to “OFF” position.
3	Turn “ENGINE SPEED” switch to “IDLE” position.
4	Press the “OFF” button to shut down the engine and then turn “MAIN POWER” key to “OFF” position.
5	Drain un-used material out of discharge gate.
	**WARNING**
	DO NOT put the tank scraper tool into the discharge pipe with mixer running, Severe damage and personal injury will result.
6	Periodically, you will want to use the tank scraper tool to clean out old material from the bottom of the tank.

©2026 by Crafco, Inc. All Rights Reserved

5.9 Storing the Machine

Store the machine in an area where moisture cannot enter the heating system, i.e., the heat transfer oil tank, etc. Extended down time can cause moisture to build up in the heating tank.

Evidence that moisture has collected in the heat transfer oil is a constant popping noise. If this popping noise is heard, warm the heat transfer oil to 300°F for two to three hours to evaporate the moisture. Failure to follow this procedure will cause the heat transfer oil to overflow the tank, resulting in possible machine damage and/or personal injury.

Before initial startup after storing the machine for an extended period of time, Crafco recommends checking the material tank and removing any water/moisture that may have collected. Then heat the material to 300°F for two to three hours to evaporate any moisture that could be left in the material tank, even if none was noticed upon inspection. Failure to follow this procedure could cause the material to overflow the tank, resulting in possible machine damage and/or personal injury.

Store the machine for longer periods with the material tank empty.

5.10 Overnight Heaters

Two overnight heater rods are provided on the unit. PN 24190 for 110V (standard), and PN 24194 for 220V (optional). The overnight heater may be used to maintain an overnight heat transfer oil temperature of approximately 200-250°F (93.3°C)

Table 5-9 Overnight Heaters

Step	Action
	WARNING
	The overnight heaters are for overnight use only. If the overnight heater is used, the material must be dispensed the next day. If the material cannot be dispensed, the machine needs to be heated to mixing temperatures and agitated to prevent settling. If you do not dispense the material after 1 night's use, you risk damaging the material and possibly the machine due to settled material, which can harden in the bottom of the material tank
1	Attach each heater power cord to a suitable extension cord.
2	Attach each extension cord to its own outlet (circuit) rated at 15 amps.
	CAUTION
	Attaching both heaters to the same outlet will most likely pop the circuit breaker inline from the power source. Combining both heaters together will draw too much amperage for most common 15 amp circuits.

©2026 by Crafco, Inc. All Rights Reserved

Table 5-10 Overnight Heaters (continued)

Step	Action
	WARNING
	Suitable extension cord size requirements for **110 Volt** use: 25-50 FT • 16-20 Amps • 12 Gauge (Heavy Duty) or 10 Gauge (Extra Heavy Duty) 100 FT • 16-20 Amps • 10 Gauge (Extra Heavy Duty) Suitable extension cord size requirements for **220 Volt** use: 25-50 FT • 8-10 Amps • 14 Gauge (Medium Duty) or 12 Gauge (Heavy Duty) 100 FT • 8-10 Amps • 12 Gauge (Heavy Duty) **Failure to use the correct size extension cord could result in damage and possible fire!**
3	Disconnect the heaters when using the machine's burner system.
	CAUTION
	Do not use heaters without heat transfer oil in the tank. Doing so will overheat and damage the heaters, and they will have to be replaced.

5.11 Hot Applied Patching Material Placement

Prior to the material application, you will need to move the equipment to the work area. The items needed are:

1. Compressor
2. Saw to cut out repair area
3. Pneumatic hammer
4. Broom and shovels to clean up area
5. Broom or sweeper (if required to remove FOD)
6. Patcher 4 machine, material, and application tools
7. Dressing stone
8. Heat lance
9. Primer
10. "Hudson" sprayer for the primer
11. Paint brushes
12. Small paint cans
13. Rags
14. 1 or 2 gallons of water (to speed up cooling process if required)
15. Gloves, heavy welder gloves and standard leather gloves
16. Cloth duct tape
17. Reference materials

©2026 by Crafco, Inc. All Rights Reserved

5.11.1 Application Steps

Table 5-11 Application Steps

Step	Action
1	Locate area to be repaired.
2	Calculate the amount of material needed for the repairs.
3	Place bags or cubes of material into the mixer and heat. Start the agitator as soon as possible to break up the bags. The heat up time is usually within 60-90 minutes. Care should be taken not to overheat the material. If material temperature is too high, lower the burner material temperature control and/or open the lid
4	Mark the areas to be cut out. Make sure you cut out enough of the pavement to remove all cracking around the patch area. If the repair area extends to both sides of a joint, the repair area must be a minimum of 4” on each side of the joint.
5	Cut with either a wet or dry saw. The saw should cut a minimum of 1-1/2” to 2” deep.
6	Remove the remaining material with a chipping or jack hammer to a minimum depth of 1-1/2 to 2”.
7	After the repair area has all the loose material removed, use the hot air lance to clean and dry the pavement.
8	Apply tape 1/4” from the edge of the prepared area.
9	Prime the area with the Primer using the “Hudson” sprayer or paint brushes. If spraying the primer on repair areas, you may need to do some touch-ups with a paint brush. When touching up, you want to cover any missed spots and spread any pooled primer. Allow the primer to set up, which takes about 10-12 minutes. DO NOT DRY WITH A TORCH.
10	Have the tools needed for the repair heating in the heated toolbox.
11	Remove at least two pails of product and pour back into the melter. This will ensure a good flow of material when you start the application.
12	Apply the first lift of material to the repair. Apply adequate material so you get material within 1” of surface.
13	Allow the material to cool for a period of time, allowing air bubbles to move to the surface of the product. The bubbles are generated from uncured primer, air, or moisture. When the bubbles stop rising to the surface (usually within 15-20 minutes), flash surface with hand torch to “pop” bubbles.
14	Apply the next level and float the surface of the material with the hot irons. Seal the edges of the repair by pulling liquid to the edge and then remove the duct tape. The main portion of the material will self-level, but you may need to do some smoothing with the hot iron to ensure a level surface.

©2026 by Crafco, Inc. All Rights Reserved

Table 5-12 Application Steps (continued)

Step	Action
15	Allow this material to cool similar to the first lift - you may not experience as many bubbles this time, but some may appear. When they do, flash them with the torch.
16	If applicable, dry the aggregate dressing prior to placing the material, as wet or damp dressing will not adhere. Smooth the aggregate dressing material over the patched area with your gloved hand. This will ensure coverage of the whole surface of the material.
	CAUTION
	If you applied the aggregate dressing material too soon the bubbles will continue to rise to the surface and pop, leaving a pock marked surface. If this occurs, adjust your timing to allow more bubbles to break the surface.
17	Shut down the Patcher 4 and clean up the repaired area. If the cooling time of the material needs to be shortened, broadcast some water over the surface.
18	Sweep excess aggregate dressing material from the surface of the repair and finish clean up.
	CAUTION
	When transporting the machine long distances with hot material in the tank, always close and lock the discharge gate with the safety chain. This will prevent material from spilling out while transporting. Also, when transporting the machine with hot material in the tank, the mixer should be engaged until the material temperature cools to 250°F or material separation will occur. Never leave the burner turned on when transporting the machine. It will damage the burner.
	CAUTION
	The tool heater box is only meant to heat up the tools. Do not use the box to clean the tools. Before inserting the tools into the box, use the hand torch to clean off excess material. This will help keep material from building up in the bottom of the toolbox.

©2026 by Crafco, Inc. All Rights Reserved

5.12 Heated Toolbox Operation

The Patcher 4 is equipped with a Heated Toolbox that is designed to heat up the tools necessary when making a patch using mastic type materials. Follow the steps below in order to operate the heated toolbox safely.

Table 5-13 Heated Toolbox Operation

Step	Action
	**WARNING**
	The heated toolbox is capable of generating extreme heat, so extreme caution needs to be taken while using the heated toolbox. Make sure to wear the proper Personal Protective Equipment when operating the Patcher II and the heated toolbox.
	Make sure to wear protective gloves that have suitable insulation for handling the tools when they have been heated. If the tools are left in the heated toolbox for extended periods they can overheat to the point where the handle is glowing red hot and severe burns could occur.
1	Turn on the Heated Toolbox power switch located on the back of the machine. After a few seconds, the burner should start and stay lit. Keep in mind the main burner switch in the control must already be turned on. Note: If the burner does not start, check that direct sunlight is not causing the flame sensor to activate. It may be necessary to block any direct sunlight from entering the toolbox with a piece of cardboard while the burner is starting. Also, due to the nature of the small orifice in the burner nozzle, it is common that the nozzle can become plugged. The nozzle may need to be replaced if the burner does not start.
2	While the burner is running, place any tools needed for the job into the heated toolbox a few minutes before needing to use them. Tip: do not run the burner when heated tools are not needed, this will save fuel.
	CAUTION
	• Make sure to put the small tools in the upper slots during heating so the tools stay mostly level. • Make sure to put the larger tools into the larger openings and the handles resting on the handle holder on the back of the machine. The tools should be mostly level with ground. The tools should not be located so that the end of the tool is pointed down into the bottom of the toolbox. It can damage the burner and easily overheat the tool. • There is a door that can be opened to heat larger shoe boxes if needed.
3	Heat the tools and use them as needed.
	**WARNING**
	Continually check to make sure the tools do not become overheated during heat up. If the tools are left in the heated toolbox for extended periods they can overheat to the point where the handle is glowing red hot and severe burns could occur. It will be necessary to turn off the burner to prevent the tools from overheating and then turn it on again as required.

©2026 by Crafco, Inc. All Rights Reserved

Table 5-14 Heated Toolbox Operation (continued)

Step	Action
	CAUTION
	The burner should not be left on for extended periods. It is meant to be turned on and off as needed through the job to prevent the overheating of tools and damage to the heated toolbox itself
4	When you are finished using the heated toolbox, turn off the burner switch, and remove the tools and place them in the storage locations towards the front of the machine.
5	Material will build up and collect in the bottom of the heated toolbox. This area should be cleaned out daily or as needed to prevent excessive buildup of material. To clean out the leftover debris, let the heated toolbox cool to ambient temperature, then open both latches on the lower portion of the toolbox, open the access door, and vacuum out any material using a shop vac. It is normal for the internal chute to deform under normal use, and it may need to be replaced periodically along with the insulation pieces on the door and lower box walls as needed. See Table 6-5 General Maintenance Parts for replacement part numbers.

Figure 5-12 Heated Toolbox

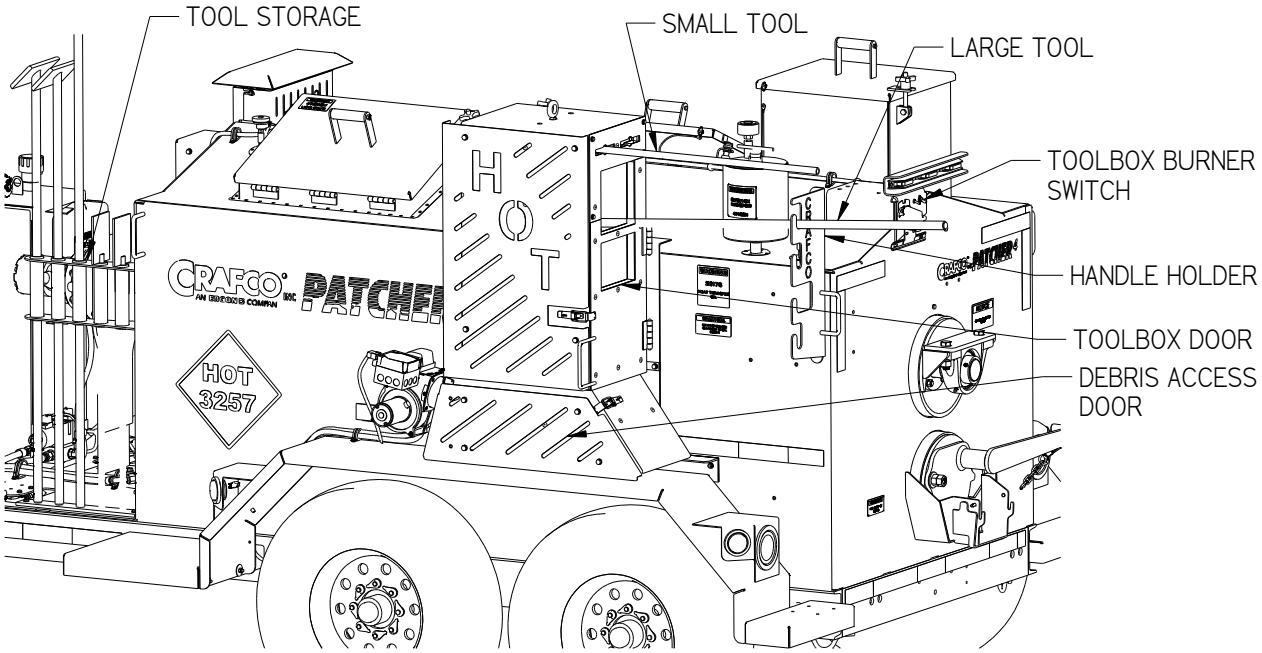

©2026 by Crafco, Inc. All Rights Reserved

5.13 Material Tank Depth to Capacity Chart

Figure 5-13 Material Tank Depth to Capacity Chart

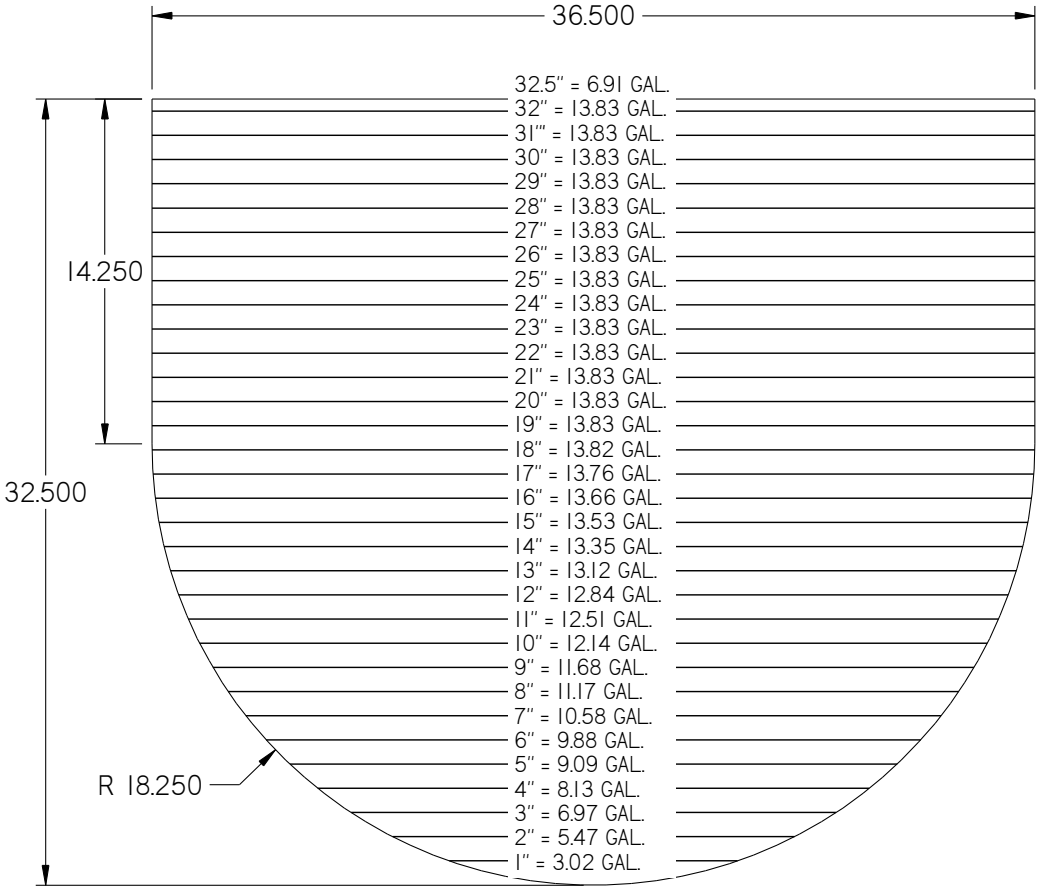

MATERIAL TANK DEPTH TO CAPACITY CHART		
DEPTH OF MATERIAL	CAPACITY IN GALLONS	CAPACITY IN LITERS
1"	3.02	11.43
2"	8.49	32.14
3"	15.46	58.52
4"	23.59	89.3
5"	32.68	123.71
6"	42.56	161.11
7"	53.14	201.16
8"	64.31	243.44
9"	75.99	287.65
10"	88.13	333.61
11"	100.64	380.96
12"	113.48	429.57
13"	126.6	479.23
14"	139.95	529.77
15"	153.48	580.99
16"	167.14	632.69
17"	180.9	684.78
18"	194.72	737.1
19"	208.54	789.41
20"	222.37	841.76
21"	236.19	894.08
22"	250.02	946.43
23"	263.84	998.74
24"	277.67	1,051.1
25"	291.5	1,103.45
26"	305.32	1,155.76
27"	319.15	1,208.11
28"	332.97	1,260.43
29"	346.8	1,312.78
30"	360.62	1,365.1
31"	374.45	1,417.45
32"	388.28	1,469.8
32.5"	395.19	1,495.96

©2026 by Crafco, Inc. All Rights Reserved

5.14 Removing Optional Heated Chute

If desired, your Patcher 4 will have a heated chute kit already installed from the factory. If you want to remove the heated chute from the machine, you must follow the steps below, or injury to operators and damage to your machine could result. You can set it up for temporary use with a minimal number of changes in approx. 15 minutes or completely remove all of the parts from the machine in about 1 hour depending on your future job requirements.

Table 5-15 Temporary Removal of Optional Heated Chute

Step	Action
	**WARNING**
	Following this procedure prevents hot oil from getting on operators and causing severe burns. Never operate the machine without the heat transfer oil lines connected correctly. Never use the heat transfer oil valves to be the only method of stopping oil flow while the machine is operated. They are only used to stop flow to change the heat transfer oil lines when the machine is cool and not operating.
	CAUTION
	Following this procedure prevents damage to the machine from operating the machine with hydraulic and heat transfer oil lines not connected correctly.
1	Make sure the engine and burners are powered off. Make sure the machine and heat transfer oil has cooled to ambient temperatures before attempting to remove the chute.
2	Close both of the heat transfer oil ball valves.
3	Remove the heat transfer oil line (steel braided line covered in fire sleeve) coming out of the pump to the chute, at the chute fitting. Some heat transfer oil will leak from the lines.
4	Remove the other heat transfer oil line from the swivel fitting on the end of the ball valve
5	Connect the loose heat transfer oil line from the pump to the open swivel fitting on the end of the ball valve. You should have this line connected from the swivel fitting on the pump to the swivel fitting on the ball valve to loop the flow of heat transfer oil back into the tank. Secure the line to prevent it from getting damaged. See Figure 5-15 Heated Chute Temporary Removal View
6	Open the ball valves to allow the heat transfer oil to flow during machine operation. Make sure your connections are tight and leak free.
	CAUTION
	DO NOT operate the machine with the ball valves closed. Doing so will damage the pump and possibly the heated chute.
7	Remove the hitch pin from the receiver and slide out the heated chute assembly. Refer to Figure 5-14 Optional Heated Chute Components (P/N 56890N)for more info. The machine can now safely be used.
8	To install the chute, reverse these steps.

©2026 by Crafco, Inc. All Rights Reserved

Table 5-16 Complete Removal of Optional Heated Chute

Step	Action
	**WARNING**
	Following this procedure prevents hot oil from getting on operators and causing severe burns. Never operate the machine without the heat transfer oil lines connected correctly. Never use the heat transfer oil valves to be the only method of stopping oil flow while the machine is operated. They are only used to stop flow to change the heat transfer oil lines when the machine is cool and not operating.
	CAUTION
	Following this procedure prevents damage to the machine from operating the machine with hydraulic and heat transfer oil lines not connected correctly.
1	Make sure the engine and burners are powered off. Make sure the machine and heat transfer oil has cooled to ambient temperatures before attempting to remove the chute.
2	Close both of the heat transfer oil ball valves.
3	Remove both the heat transfer oil lines (steel braided line covered in fire sleeve) coming out of the ball valves. Some heat transfer oil will leak from the lines. You need to install threaded caps over the exposed fittings or connect one of the heat transfer oil lines to act as a loop between the two fittings. Tighten the fittings and secure the line out of the way. Open the heat transfer oil valves.
4	Remove one of the hydraulic lines from the motor. Remove the opposite hydraulic line from the bulkhead fitting near the bottom of the frame. Hydraulic fluid will leak from the lines.
5	Quickly connect the hydraulic line that is still connected to the bulkhead fitting to the other bulkhead fitting to loop the hydraulic flow. Tighten the fittings and make sure they are leak free.
6	Remove the motor and pump assembly, chute assembly, hitch mounting plate assembly, and the chute support assembly from the machine.
7	Once you are finished, you should have the heat transfer oil ball valves capped or looped, and the hydraulic bulkhead fittings looped. Check to make sure all the fittings are tight. See Figure 5-16 Heated Chute Complete Removal View
8	Check and top off the heat transfer oil and hydraulic fluids to their proper fill levels.
9	The machine can now safely be used. Refer to Figure 5-14 Optional Heated Chute Components (P/N 56890N)for more info.
10	To install the chute, reverse these steps.

©2026 by Crafco, Inc. All Rights Reserved

Figure 5-14 Optional Heated Chute Components (P/N 56890N)

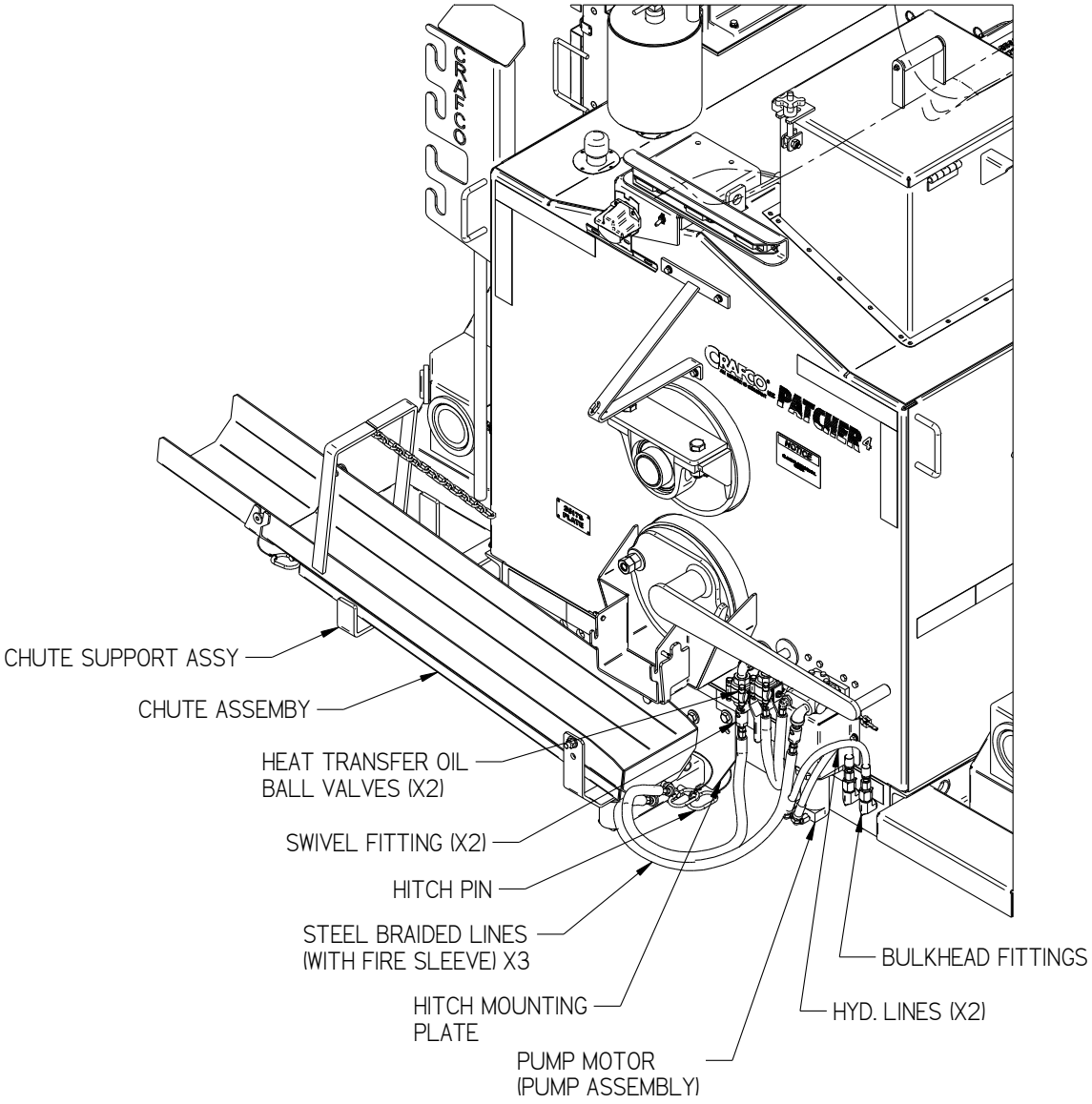

©2026 by Crafco, Inc. All Rights Reserved

Figure 5-15 Heated Chute Temporary Removal View

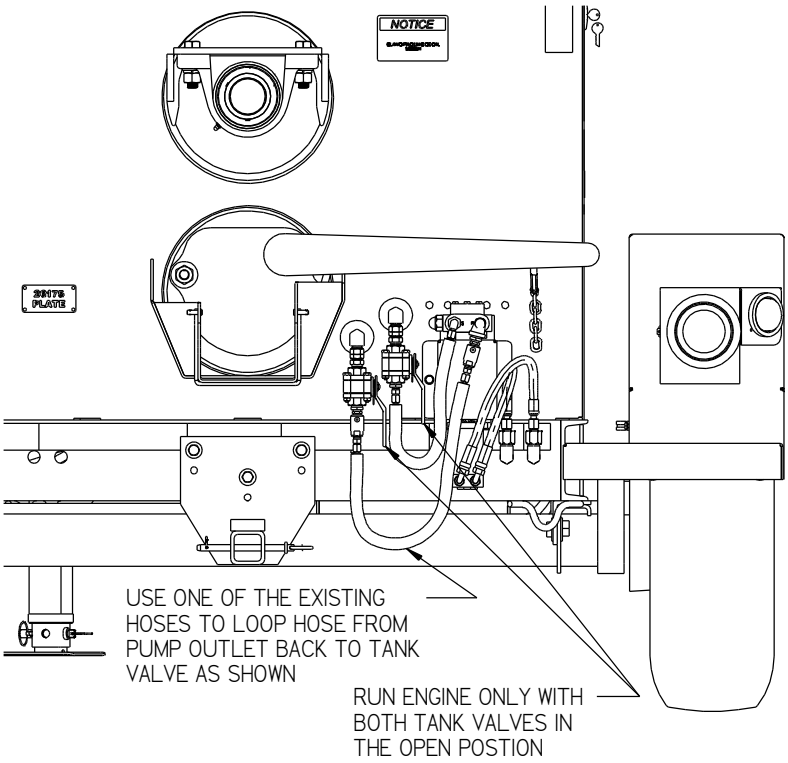

Figure 5-16 Heated Chute Complete Removal View

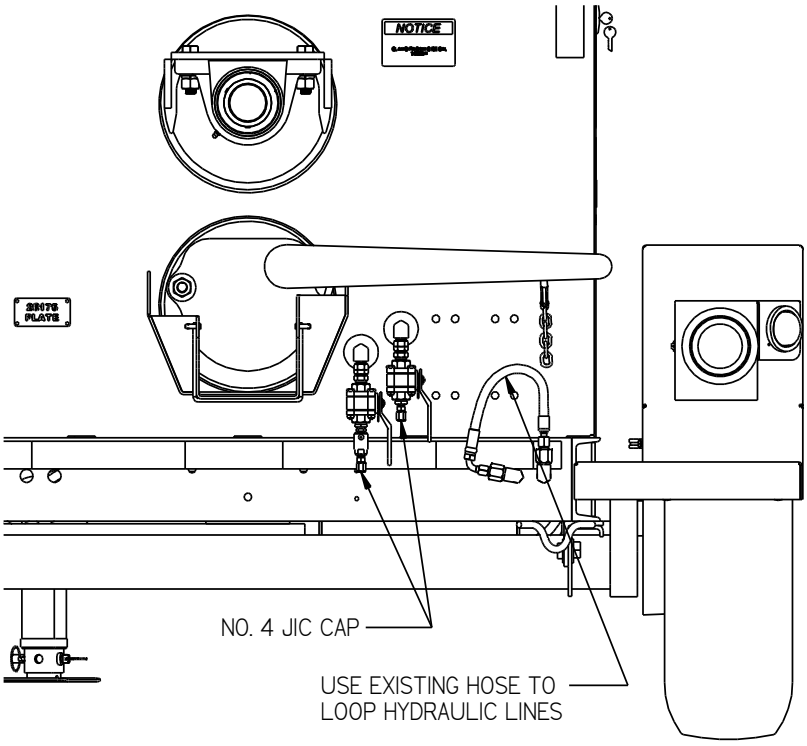

©2026 by Crafco, Inc. All Rights Reserved

5.15 Mounting a Skid Machine

Table 5-17 Mounting a Skid Machine

Step	Action
	WARNING
	The truck needs to be of the proper size to hold the loaded weight and size of the machine and any extra material to be carried. The center of gravity of the loaded machine should be above or in front of the rear main axle. Contact Crafco for help in determining the location of the center of gravity of your machine before mounting. Helmet, gloves, safety glasses, and safety shoes must be worn when mounting a skid machine.
	WARNING
	Adequate equipment and lifting devices with sufficient capacity must be used to raise and move the machine from the bottom frame/skid tubes of the machine for loading purposes. Do not use lugs on top of tank for lifting purposes.
	WARNING
	Only mount the unit to a metal truck bed or any other non-flammable surface that can support the weight of the machine. **Failure to use the correct mounting surface could result in damage and possible fire!**
	WARNING
	Mount the machine a minimum of 3” (76mm) above the truck bed. Depending on the machine and airflow, you may have to mount it higher to prevent excessive temperatures on the machine and truck bed.
1	Mount with four ½” diameter Grade 5 bolts (or 12mm Grade 10.9) minimum, using the loading tubes at each corner of the machine to secure it in place.
	WARNING
	Leave 15” (381mm) clearance around the machine. Keep this area clear of any flammable material such as empty sealant boxes. **Failure to keep this area clear could result in damage and possible fire!**

©2026 by Crafco, Inc. All Rights Reserved

TYPICAL SKID MOUNT GUIDELINES

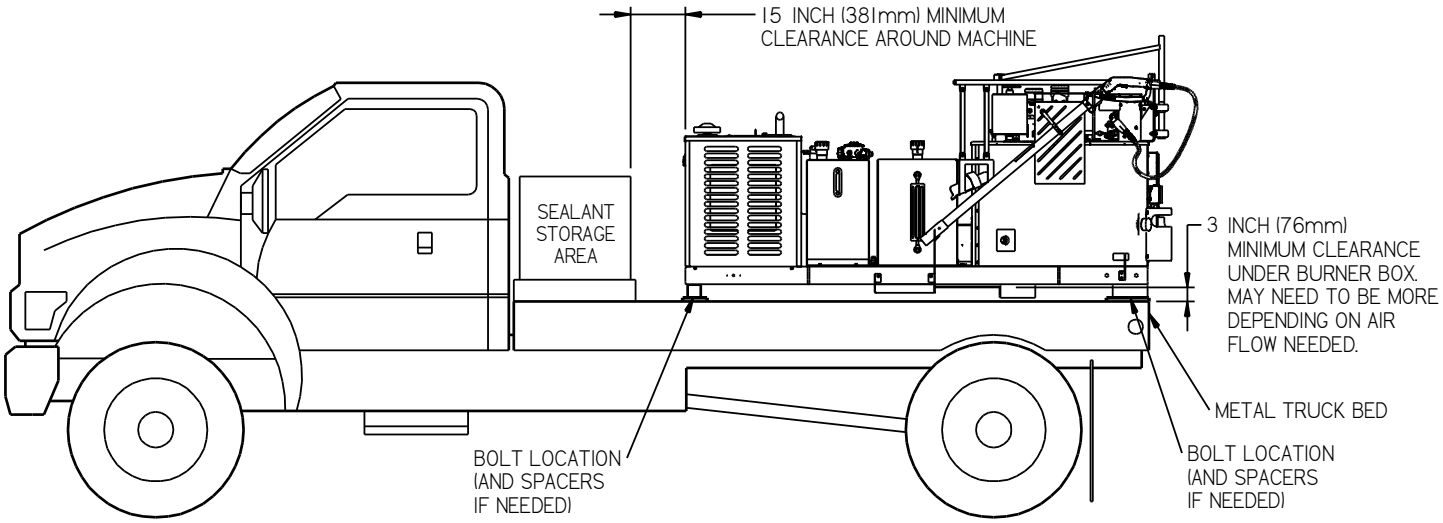

Chapter 6 Maintenance Instructions

6.0 Maintenance Instructions

This chapter contains all normal maintenance instructions to properly maintain your machine.

6.1 Engine

Check oil daily. Refer to the manufacturer's operating and maintenance instructions for the engine.

6.2 Hydraulic System

Check hydraulic fluid daily.

Change hydraulic filter every 250 hours of machine operation.

Change hydraulic fluid every 500 hours of operation.

6.3 Heat Transfer Oil

Check the oil level at the start of every day.

Change the oil every 500 hours of machine operation or 1 year, whichever comes first.

6.4 Mixer Packing Gland Seals

Tighten gland while machine is hot at 50 hr. intervals. Do not overtighten. If material is leaking from the seals, they either need to be tightened or more gland packing added, and then tightened.

6.5 Mixer Shaft Bearings

Lubricate weekly using Crafco Part No. 56860 high temperature bearing grease.

6.6 Material Sensor Tube

Check for heat transfer oil in tube every 50 hours of operation. 2 ounces required.

6.7 Lug Nuts

Torque all nuts/bolts before first road use and after each wheel removal. Check and torque after the first 10 miles, 25 miles, and again at 50 miles. Check periodically thereafter.

Torque in stages as follows:

- First stage 20-25 foot-pound (ft-lb)
- Second stage 50-60 foot pound (ft-lb)
- Third stage 90-120 foot pound (ft-lb)

Tighten bolts and nuts in the sequence shown in Figure 6-1 Lug Bolt Tightening Sequence

Figure 6-1 Lug Bolt Tightening Sequence

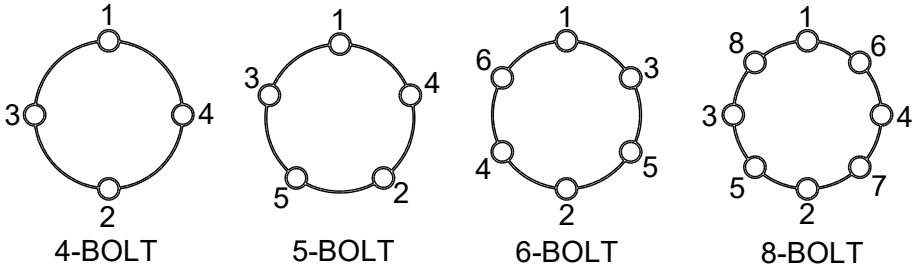

©2026 by Crafco, Inc. All Rights Reserved

6.8 Wheel Bearing

Pack the wheel bearing every 24,000 miles or every two years, whichever comes first. Use a good grade of bearing grease.

6.9 Brakes

Check the brakes daily.

6.10 Tongue Jack

Lubricate the tongue jack, using a good grade of bearing grease.

6.11 Water Separator (Isuzu Engine)

Check the water separator for excess water in the housing. If the red ring is up halfway on the canister, then it needs to be drained out. To drain, turn “OFF” the valve, remove the ring that holds the canister in place, dump out the fuel and water mixture. Then replace the canister with the threaded ring and turn “ON” the fuel valve.

6.12 Temperature Control Calibration

Check the control knob calibration weekly. Calibrate by turning the knob counterclockwise. If the marks do not align, loosen screw in knob and align the line on the control knob with the calibration mark on the scale plate. See Figure 6-2 Temperature Control Calibration

Figure 6-2 Temperature Control Calibration

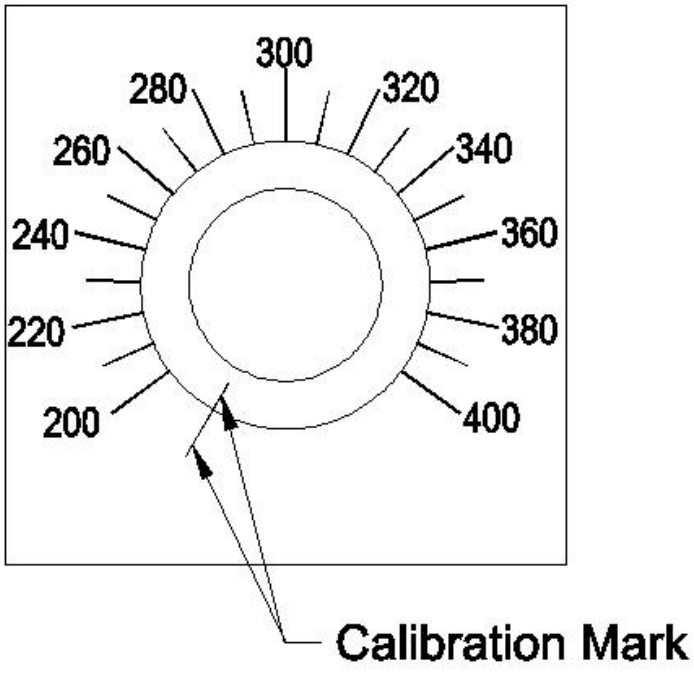

©2026 by Crafco, Inc. All Rights Reserved

6.13 Maintenance Chart

Table 6-1 Maintenance Chart

		Hours			
Location	**Procedure**	**8**	**50**	**250**	**500**
Engine check oil level	Refer to the manufacturer's instructions for the engine	X			
Engine Radiator	Check and clean fins with water				X
Other engine maintenance	Refer to the manufacturer's operating and maintenance instructions for the engine.				
Material Sensor Tube	Check for Heat Transfer Oil		X		
	Add	As needed			
Heat Transfer Oil	Check	X			
	Change				X
Hydraulic Oil	Check	X			
	Change				X
Gear Box Oil	Check	X			
	Change				X
Hydraulic Oil Filter	Change			X	
Burners	Check burner box insulation*			X	
	Replace Burner Box Insulation*				X
	Replace Fuel Filter				X
	Clean CAD cell				X
	Check Electrodes				X
	Check Flame Retainer*			X	
	Replace Flame Retainer*				X
	Replace burner nozzle				X
Mixer Shaft Packing	Tighten when hot at 50 hour intervals. Do not overtighten.		X		
Mixer Shaft Bearings	Grease using Crafco Part No. 56860 Hi-Temp grease.		X		
Wheel Bearings	Clean and re-pack using a good grade of bearing grease.	Every 24,000 miles or two years			

*Replace as needed, every 500 hours, or annually. Whichever comes first

©2026 by Crafco, Inc. All Rights Reserved

Table 6-2 Maintenance Chart (continued)

		Hours			
Location	**Procedure**	**8**	**50**	**250**	**500**
Tongue Jack	Grease using a good grade of bearing grease.	Once a year			
Material Tank	Scrape out tank to remove all old material.				X
Material Sensor Guard	Scrape out built up material around guard.				X
Heated Toolbox	Clean out material drippings. Replace chute assembly as needed. PN 57475N	X			
Water Separator (Isuzu Engine)	If red ring is halfway up the body then drain.		X		
Adjusting Discharge Gate	Check and adjust if leaking		X		

*Change as needed, every 500 hours, or annually. Whichever comes first.

See Table 6-5 General Maintenance Parts for more info on part numbers.

©2026 by Crafco, Inc. All Rights Reserved

6.14 Service Instructions

Table 6-3 Service Instructions

Step	Action
1	Do a general inspection of the machine at least once a week.
2	Replace all worn or damaged parts. **Note:** Keep regular replacement items in stock for emergency repairs to prevent costly downtime. See Table 6-6 Recommended Spare Parts
3	Make necessary adjustments and tighten all loose nuts or screws.
4	Watch for leaks. Tighten fittings or repair, as necessary.
5	Clean the external surfaces of the machine at regular intervals. **Note:** Refer to the material manufacturer's instructions for recommendations.
6	Follow the recommended maintenance per Table 6-1 Maintenance Chart

For service, find a list of authorized Distributors and service centers at Crafco.com/how-to-purchase/

6.15 Recommended Fluids and Lubricants

Table 6-4 Recommended Fluids and Lubricants

Application	Recommended	Full Point
Engine Oil	Refer to engine manual	Refer to Engine Manual
Hydraulic Oil	Shell AW Hydraulic 46	15 Gals.
Heat Transfer Oil	Shell Turbo T 68 (Group II)	50 Gals.
Gear Box Oil	85W-140 Gear Oil	1 Qt.

©2026 by Crafco, Inc. All Rights Reserved

6.16 General Maintenance Parts

Table 6-5 General Maintenance Parts

Recommended Quantity	Description	Part No.
10.25” ea., 4 per location	Packing, Mixer Shaft	32423N
1	Main Burner Nozzle (2.50)	56646N
1	Toolbox Burner Nozzle (0.5)	32403
1	Toolbox Burner Replacement Insulation	57474N
1	Toolbox Burner Door Replacement Insulation	57479N
1	Toolbox Inner Chute Assy w/ Insulation	57475N
1	Hydraulic Return Line Filter	45438
1	Engine Air Filter	45391
1	Engine Oil Filter	45389
3	Fuel Filter, Engine + Burner	41867
1	Water Separator	47150
1	Burner Box Insulation Replacement Kit	56965K
1	Burner Flame Retainer	41953N

6.17 Recommended Spare Parts

Table 6-6 Recommended Spare Parts

Recommended Quantity	Description	Part No.
1	DC Controller	42335
2	Auto Stop Lid Switch	39608
1	Burner Fuel Pump Coupling	41970
1	Temp Controller, Material	57863
1	Temp Controller, Hot Oil	43391
1	Toolbox Burner Nozzle (0.5)	32403
1	Main Burner Nozzle (2.50)	56646N

©2026 by Crafco, Inc. All Rights Reserved

6.18 Applicable Brands of Heat Transfer Oil

Table 6-7 Applicable Brand of Heat Transfer Oil

Manufacturer	Product Name	Crafco Heat Transfer Fluid
Chevron	Heat Transfer Oil Grade 46	Shell Turbo T 68 (Group II)
Citgo	Hytherm Oil 46	Shell Turbo T 68 (Group II)
Conoco	Hydroclear Heat Transfer Oil	Shell Turbo T 68 (Group II)
Fina	Vulcan Heat Transfer Oil 46	Shell Turbo T 68 (Group II)
Lubrication Engineers	Heat Transfer Oil	Shell Turbo T 68 (Group II)
Exxon Mobile	Caloria HT 43	Shell Turbo T 68 (Group II)
Mobil	Mobiltherm 43	Shell Turbo T 68 (Group II)
Mobil	Mobiltherm 603	Shell Turbo T 68 (Group II)
Phillips 66	Heat Transfer Oil #3`	Shell Turbo T 68 (Group II)
Phillips 66	Magnus Oil 68	Shell Turbo T 68 (Group II)

CAUTION

The heat transfer oil in this machine is a grade that has been tested and recommended by Crafco Using a grade of oil not specifically recommended by Crafco, is cause for warranties to be voided.

All oils subjected to high temperatures deteriorate with time and lose many of their characteristics. Tests conducted by Crafco have determined that for best results and safety, the heat transfer oil in this machine must be drained and replaced with Crafco recommended oil after five hundred (500) hours of machine operation or one (1) year, whichever occurs first.

6.19 Typical Heat Transfer Oil Specifications

Table 6-8 Typical Heat Transfer Oil Specifications

ISO	68
Flash Point, COC	445°F
Viscosity @ 100°F-SUS	325
Viscosity @ 210°F-SUS	50
Viscosity Index	95-100
Pour Point	0°F
Carbon residue	1%

©2026 by Crafco, Inc. All Rights Reserved

6.20 Changing the Heat Transfer Oil

Table 6-9 Changing the Heat Transfer Oil

Step	Action
1	To facilitate easier draining of the heat transfer oil, heat the oil to approximately 100°F (38°C).
	WARNING
	Wear proper PPE (safety glasses, face shield, gloves, long sleeve shirt) to prevent bodily injury while servicing the heat transfer oil.
2	Locate the heat transfer oil drain plug on the underside of the melter directly below the material tank. See Figure 6-3 Heat Transfer Oil Drain Plug and Fill Ports
3	Remove the pipe cap from the drainpipe with a pipe wrench and allow the oil to drain into an appropriately sized container. **Note:** It may be necessary to use a second wrench to keep the drainpipe from turning.
4	If oil fails to drain from the tank, this may be an indication that the oil has crystalized (coked up) inside of the drainpipe. Use a long screwdriver or steel rod to break up the hardened material from the drainpipe to allow the oil to flow. **Note:** Raise the front of the machine slightly to allow oil to flow towards the drainpipe.
5	After the oil has completely drained, replace the pipe cap onto the drainpipe and fill the tank to the correct level on the dipstick with a recommended oil that meets ISO 68 specification. See section 6.18 and.6.19 Also see, 5.2 step 4 for checking HTO level.
	CAUTION
	Do not overfill the heat transfer oil tank as the oil expands when heated and may overflow.

Figure 6-3 Heat Transfer Oil Drain Plug and Fill Ports

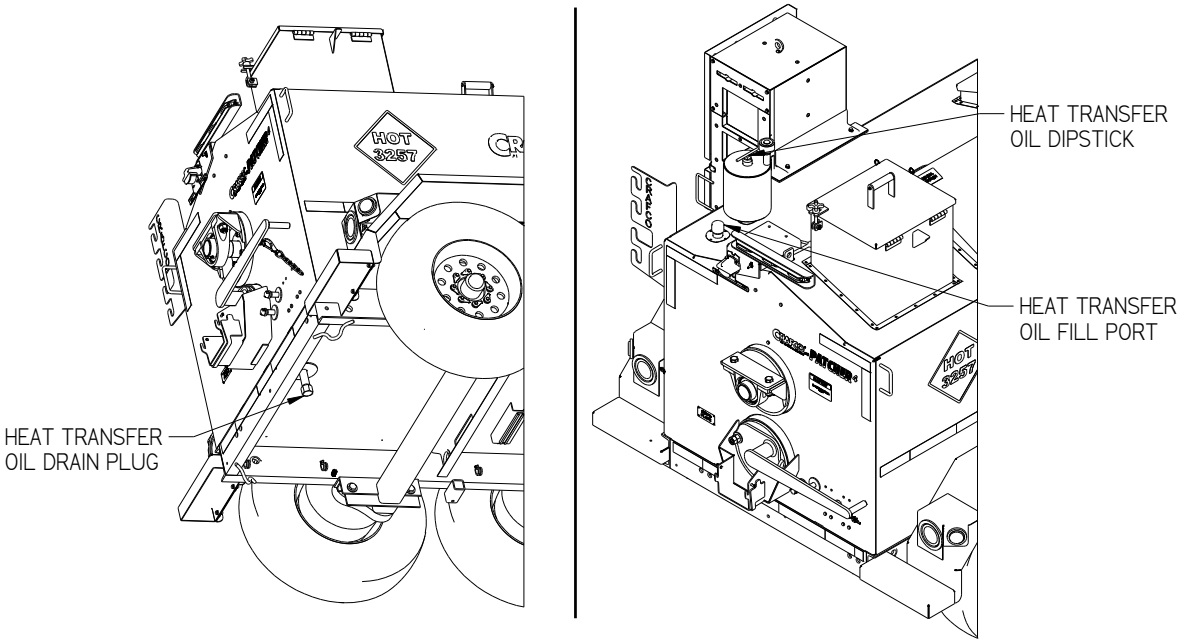

6.21 Adjusting the Discharge Gate

Due to normal wear and tear, the discharge gate will need periodic adjustment to keep it sealed. It features a double nut tightening system. If the gate is leaking material excessively, you will need to adjust the nuts so it can re-form a seal when closed.

Table 6-10 Adjusting the Discharge Gate

Step	Action
	**WARNING** The material in the material tank is extremely hot. Bodily contact with hot material can cause severe burns. The high operating temperatures of this machine and the material it contains require that protective clothing, gloves, hard-soled shoes, and safety glasses or a face shield be worn at all times while maintaining the machine.
1	While the machine is at operating temperature, loosen the outermost nut. Then tighten the innermost nut.
2	Open and close the discharge gate a few times to clean off the sealing surfaces.
	Note: If there is material in the machine, make sure to place a bucket below the chute to collect any material that comes out. You may also want to use a torch to clean off any built up material from the discharge gate area.
3	As you open and close the gate, it should take less force as the sealing surfaces clean themselves. With the gate closed, tighten the inner nut again.
4	Open and close the gate a few more times, making sure the gate operates smoothly, and the sealing surfaces are clean of any aggregate.
5	Once the sealing surfaces are clean, you will want to tighten the nut so that the gate operates smoothly with a little resistance. It should not be loose.
6	Once you have the inner nut set to your desired resistance, you will need 2 wrenches. Use one to hold the inner nut in position and then tighten the outer nut to lock it.
7	Open and close the gate. It should operate smoothly and not allow any excessive material to leak.

©2026 by Crafco, Inc. All Rights Reserved

6.22 Adjusting and Replacing Mixer Shaft Packing

Table 6-11 Adjusting and Replacing Mixer Shaft Packing

Step	Action
1	Bring the Patcher 4 to temperature as preparation to drain the material tank below the mixer shaft level.
2	Drain material until the level is below the mixer shaft so material will not leak out during replacement.
	**WARNING** The material in the material tank is extremely hot. Bodily contact with hot material can cause severe burns. The high operating temperatures of this machine and the material it contains require that protective clothing, gloves, hard-soled shoes, and safety glasses or a face shield be worn at all times by operators of the machine.
3	Set the heat transfer oil temperature to 150 degrees and let it cool down to that temperature.
4	Start with the back seal area first on the back of the machine. You will have to unbolt the bearing, loosen the set screw on the bearing, and slide the bearing off the back of the machine.
5	Remove the 4 nuts that hold each packing gland assembly in place and pull the packing gland assembly off of the shaft.
6	Cut the rope seal to 10.25” long. Wrap the new packing seal around the shaft with the seam at least 90° from the existing seam seal and push it into the seal cup. You can use the packing gland assembly to help push it in. When the machine is new, it has four of the 10.25” wraps in each seal area.
7	Align the packing gland assembly with the studs and slide it into place. Tighten down the 4 nuts in a cross pattern until they are reasonably tight.
8	Re-install the bearing, tighten the mounting bolts, and set screw.
9	Go to the front of the machine, unbolt, and slide the bearing back and loosen the packing gland assembly nuts. Then slide the gland towards the bearing.
10	Wrap the new packing seal around the shaft and push it into the cup as you did before.
11	Align the packing gland assembly with the studs and slide it into place. Tighten down the 4 nuts in a cross pattern until they are reasonably tight. Then slide the bearing back into place and tighten the mounting bolts and set screws.
12	Heat up and use the machine as normal. You may need to tighten the packing gland assembly nuts after some use, or if they were not tightened enough after replacement. There should not be any material leaking from the packing seal area.
13	Run the mixer shaft and check for any leaking. If it leaks, you need to tighten the nuts in a cross pattern until the leaking stops. Make sure not to overtighten the packing or premature wear of the shaft could result.

©2026 by Crafco, Inc. All Rights Reserved

6.23 Cleaning Material Tank and Sensor Area

The material tank needs to be cleaned every year or as needed for proper operation. As the machine is used, material builds up around the tank walls and sensor guard. The built up material prevents heat from getting to the fresh material and causes longer heat up times. The built up material will also prevent the material temperature sensor from reading as accurately because it becomes insulated from the fresh material. The coked material needs to be scraped or chipped from the tank walls. The area between the sensor and sensor guard needs to be cleaned also for proper temperature sensing. An air chisel with various sized blades usually works best to break up the material and remove it from the walls. Once the walls and sensor guard areas are cleaned, remove all the loose chunks from the tank, and vacuum out any smaller pieces.

6.24 Cleaning the Melter

We recommend using Orange-Sol industrial cleaner for cleaning the exterior of the machine. The cleaner can be found at the following website; https://www.orange-sol.com/industrial-formula/.

6.25 Burner Fuel Filter Replacement

Both the Main Burner and Toolbox Burner are equipped with in-line fuel filters for easy replacement. Follow the steps below to replace the fuel filter. Both burners also feature an automatic self-priming/bleed feature. During initial startup of the burner, it will run the fuel pump for a few seconds to clear out any air from the fuel lines that may have accumulated during machine storage, during a filter change or running out of fuel in the fuel tank.

Table 6-12 Burner Fuel Filter Replacement

Step	Action
1	The machine should be off and cooled to ambient temperature.
2	Place a drain pan below the burner fuel filter assembly.
3	Close the ball valve that is located inline before the burner fuel filter assembly.
4	Unscrew the filter from the assembly using an oil filter or strap style wrench.
5	Screw the new filter into place and tighten by hand.
6	Open the ball valve to allow fuel to flow.
7	For the Main Burner, turn on the Power key and turn on the Burner switch. The burner should self-prime and start. It may take a couple of cycles to fill the new fuel filter and bleed the fuel system.
7A	For the Toolbox Burner, turn on the Power key and turn on the Burner switch. Then go to the back of the machine and turn on the Toolbox Burner switch. The burner should self-prime and start. It may take a couple of cycles to fill the new fuel filter and bleed the fuel system.
8	Once the burner is running, check for any fuel leaks and tighten the filter if needed.
9	Turn off all Burner Switches and the Power key.

©2026 by Crafco, Inc. All Rights Reserved

Chapter 7 How to Use a Multimeter

7.0 How to Use a Multimeter

Crafco machines use 12-volt direct current (DC) to power the burners, and hydraulic valves. The DC power is from a 12-volt battery.

12-volt DC power has little danger of electrical shock. Care must still be taken when dealing with DC power systems because it is capable of producing large amounts of current.

7.1 Checking DC Voltage with a Multimeter

Connect the probes to the meter.

Set the range to a position that includes 12-volts or higher.

Touch the red probe to the positive side of accessory and black probe to ground. If the item you are checking has a ground wire attached then use that ground or you can use a non-painted surface on the frame.

7.2 Checking Resistance (Ohms)

Connect the probes to the meter. See Figure 7-1 Standard Multimeter.

Note: When checking Ohms, the circuit cannot be completed. This means one end of the wire will need to be disconnected.

7.2.1 How to Check Wire Continuity

Set the meter to “Audible Continuity.” Now touch the probe to each end of the wire in question. The meter will read “0” on the screen and make an audible beep if the wire has continuity from end to end.

7.2.2 How to Check RTD Sensor

Set dial to Ohms Ω. If your meter has different ranges, set to 2k or 2000 ohm range. Touch one probe to each screw or wire of the sensor. The meter will read X.XX if in the 2k range or XXX.X if in the 2000 range.

©2026 by Crafco, Inc. All Rights Reserved

Chapter 7 How to Use a Multimeter

7.3 Checking Amperage

The Multimeter can be used to check amperages under 10 amps in AC or DC current.

Figure 7-1 Standard Multimeter

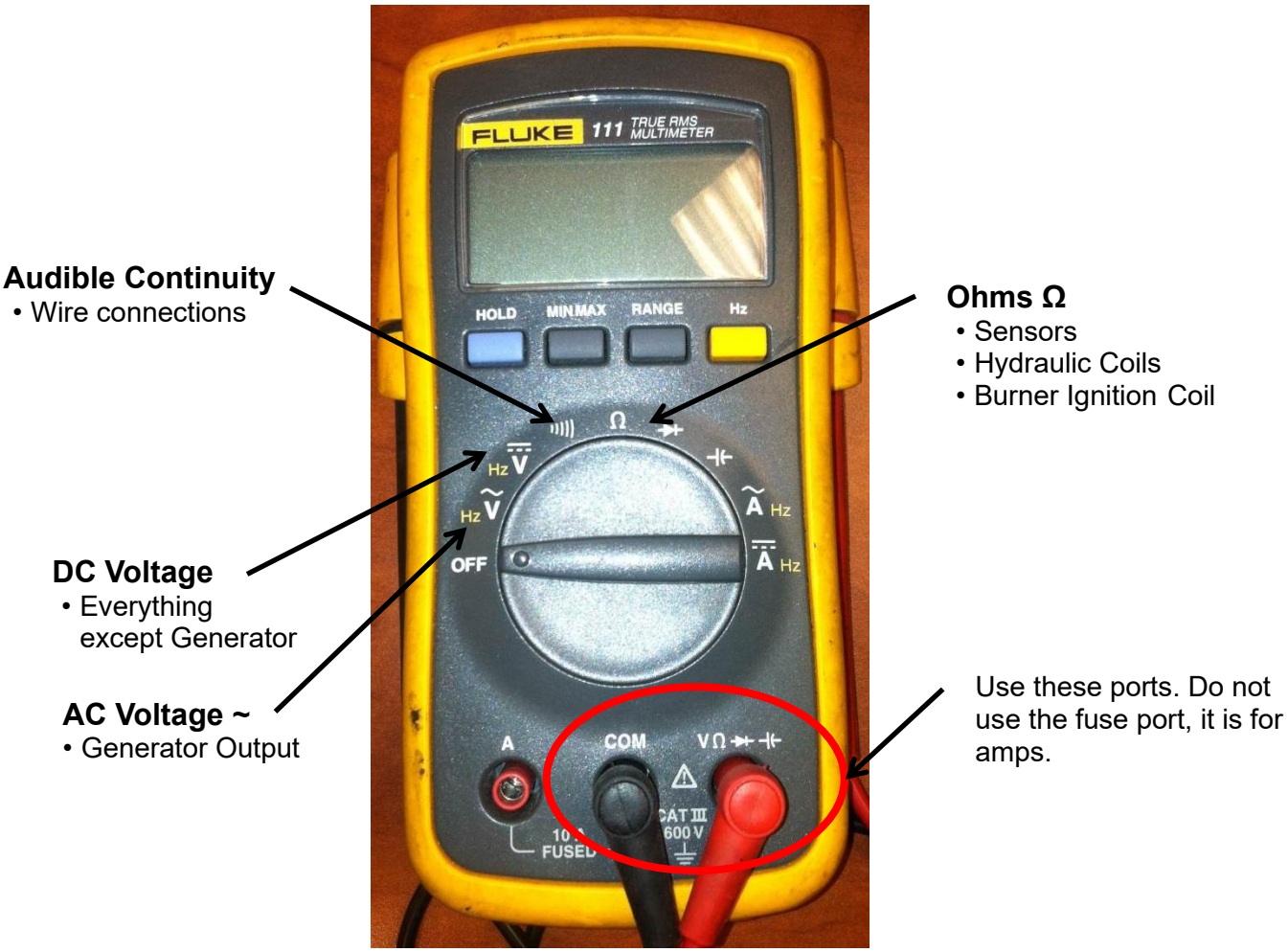

Chapter 7 How to Use a Multimeter

Figure 7-2 Clamp-On Amp Meter/Multimeter



©2026 by Crafco, Inc. All Rights Reserved

Chapter 8 Troubleshooting

8.0 Troubleshooting

8.1 Burner Troubleshooting

8.1.1 Symptom: Burner will Not Ignite

Table 8-1 Burner Basic Visual Troubleshooting

Step	Possible Cause	If . . .
1	Start Troubleshooting at the control box. Is the engine running?	• Yes, go to Step 2. • No, start the engine. • NOTE: You can troubleshoot the burner without the engine running, but you must hook a battery charger to the battery and turn the ignition key to the "ON" position.
2	Is the "POWER" toggle switch in the "ON" position?	• Yes, go to Step 3. • No, turn the toggle switch to the "ON" position
3	Are both the Material and Hot Oil temperature dials set to proper operating temperatures?	• Yes, go to Step 4. • No, set the Material according to the type of material you are using and the Hot Oil 100°F above the Material set point.
4	Are both the Material and Hot Oil temperature displays reading a three digit positive number?	• Yes, go to Step 5. • No, go to Table 8-2 Burner Electrical Troubleshooting Step 4
5	Is the red "Burner" light "ON"?	• Yes, go to Step 6. • No, go to Table 8-2 Burner Electrical Troubleshooting, Step 4
6	Is the diesel tank full?	• Yes, go to Step 7. • No, fill your tank or make sure you have enough fuel for the day.
7	Did you run the diesel tank low on fuel or empty?	• Yes, you need to bleed your burner, go to Table 8-8 Bleeding the Diesel Burners No, go to Step 8.
8	Is there smoke coming out of the exhaust stack?	• Yes, go to Table 8-9 Smoke Coming Out of the Exhaust Stack • No, go to Step 9.
9	Is your burner working properly, but it seems like it takes a lot to reach operating temperature?	• Yes, go to Table 8-11 Material is Heating Slowly • No, Call Crafco and speak to a customer service technician.

©2026 by Crafco, Inc. All Rights Reserved

Chapter 8 Troubleshooting

Table 8-2 Burner Electrical Troubleshooting Part 1

Step	Possible Cause	If . . .
1	Is the "BURNER" toggle switch in the "ON" position?	• Yes, go to Step 1a. • No, turn the main power switch to the "ON" position.
1a	Is the output voltage at the "BURNER" toggle switch 12Vdc? (Refer to the Figure 8-1 Electrical Schematic (PN 26582P4).) (Check both the red and orange wires.)	• Yes, on both, go to Step 2. • No, see below. • No, on both orange and red wires go to Step 1b. • No on orange and Yes on red replace “POWER” toggle switch.
1b	Is the circuit breaker tripped?	• Yes, reset the circuit breaker by pushing in the button which has popped out. • No, go to Step 1c.
1c	Is there output voltage at the circuit breaker? 12Vdc? (Check both red wires).	• Yes, on both, go to Step 2. • No, see below. • No, on the red wire between the circuit breaker and the power toggle switch and Yes on the red wire between the circuit breaker and the battery, replace the circuit breaker. • No, on the red wire between the circuit breaker and the battery, go to Step 1d.
1d	Is the output voltage at battery 12Vdc?	• Yes, check for broken wires or poor wire crimp at the battery and circuit breaker. • No, your battery does not have sufficient charge. Either charge or replace the battery.

©2026 by Crafco, Inc. All Rights Reserved

Table 8-2 Burner Electrical Troubleshooting Part 1 (continued)

Step	Possible Cause	If . . .
2	Are both the Material and Hot Oil readouts displaying a three-digit number?	• Yes, go to Step 3. • No, go to Step 2a.
2a	Is the voltage 12Vdc between the power and the ground on the PAKSTAT for which the display is not reading (material check terminals #3 and #5)? (Hot oil check terminals #3 and #5.)	• Yes, go to Step 2b. • No, check for broken wires or poor wire crimp on the power and the ground. • Still No, replace PAKSTAT.
2b	Does the readout display a -1? **Note:** This occurs only when there is a short in the sensor circuit.	• Yes, check the RTD sensor for water or condensation under the cap or corrosion causing a short. • No, go to Step 2c.
2c	Does the readout display a 1? **Note:** This occurs only when the sensor circuit is not completed.	• Yes, this means there is a break in the two wires between the RTD sensor and the PAKSTAT. Start at the sensor and work your way back to the control box, checking for broken wires. • No, go to Step 2d.
2d	Is the readout display blank? (Take note of the direction the red stripe on the ribbon cable is pointing before you move it.)	• Yes, move the ribbon cable which is plugged into the back of the readout which is blank to a readout next to it. If the readout displays a three digit number, the blank readout is bad and needs to be replaced. If the readout remains blank, go to Step 2e.
2e	Readout is still blank	• Use the other ribbon cable to go between both the first blank readout and the PAKSTAT for that readout. If the readout displays a three digit number, the original ribbon cable is bad and needs to be replaced. If the readout is still blank, the PAKSTAT is bad and needs to be replaced.

©2026 by Crafco, Inc. All Rights Reserved

Table 8-2 Burner Electrical Troubleshooting Part 2

Step	Possible Cause	If . . .
1	Is there 12Vdc between the yellow and black wires at the burner plug?	• Yes, go to Step 4. • No, go to Step 1a.
1a	Is there 12Vdc between the yellow wire on the burner relay in the control box and the black wire on the relay?	• Yes, check for poor connection or broken wire between the burner relay in the control box and the plug on the burner. • No, go to Step 1b.
1b	Is there 12Vdc between WHT/RED wire on the burner relay in the control box and the black wire on the relay?	• Yes, go to Step 2. • No, check for poor connection or broken wire between the burner relay in the control box and the burner reset switch.
2	Is there 12Vdc between the circuit breaker (red wire going to battery positive cable) and the ground lug on the battery tray?	• Yes, wait 15 seconds then repeat step 2. • If still no voltage, then replace circuit breaker. • No, go to step 2b.
2a	Check for loose or broken wires between circuit breaker and battery positive cable.	• Yes, replace or repair damaged wire and repeat Step 3. • No, go to step 3.
3	Is there 12Vdc between the positive and negative battery post? If this check is done while the engine is running the reading should be 13.8 volts.	• Yes, then there should be 12Vdc on the battery side of the circuit breaker. • No, replace battery. • **Note**: If the reading is less than 13.8 volts while the engine is running the alternator needs to be rebuilt or replaced.
4	Is there 12Vdc between the green wire in the burner plug and the black wire in the burner plug?	• Yes, go to Table 8-5 Testing the DC Controller • No, go to Step 4a.
4a	Is there 12Vdc between green wire labeled “GRN-CH1-S” on terminal #7 on the hot oil PAKSTAT and nearby ground source (black wire)?	• Yes, check for loose or broken wires between burner plug and PAKSTAT. • No, go to Step 5.
5	Is there 12Vdc between gray wire labeled “GRY-1” on terminal #6 on the hot oil PAKSTAT and terminal #5 black wire of the oil PAKSTAT	• Yes, replace hot oil PAKSTAT. • No, go to Step 5a.
5a	Is there 12Vdc between the gray wire on the material PAKSTAT and terminal #5 black wire of the material PAKSTAT	• Yes, check for loose or broken wires between hot oil PAKSTAT and the material PAKSTAT. • No, go to Step 6a.

©2026 by Crafco, Inc. All Rights Reserved

Table 8-2 Burner Electrical Troubleshooting Part 2 (continued)

Step	Possible Cause	If . . .
6a	Is there 12Vdc between terminal #6 grey wire and terminal #5 black wire of the material PAKSTAT?	• Yes, replace PAKSTAT. • No, go to Step 6b.
6b	Is there 12Vdc between terminal #3 orange wire and terminal #5 black wire of the material PAKSTAT?	• Yes, replace PAKSTAT. • No, go to Step 7.
7	Is there 12Vdc between terminal #3 orange wire and terminal #5 black wire on hot oil PAKSTAT?	• Yes, replace PAKSTAT. • No, go to Step 8.
8	Is there 12Vdc between bottom terminal (orange wire) of burner ON/OFF toggle switch and nearby ground source (black wire)?	• Yes, check for loose or broken wires between top terminal power switch and terminal #3 of the hot oil PAKSTAT. • No, go to Step 9.
9	Is there 12Vdc between middle terminal (red wire) of burner ON/OFF toggle switch and nearby ground source (black wire)?	• Yes, replace switch. • No, go to Step 10.
10	Is there 12Vdc between top terminal of circuit breaker (red wire) and nearby ground source (black wire)?	• Yes, check for loose or broken wires between top terminal of circuit breaker and bottom terminal (red wire) of power switch. • No, go to Step 10a.
10a	Is there 12Vdc between bottom terminal of circuit breaker (red wire) and nearby ground source (black wire)?	• Yes, replace circuit breaker. • No, go to Step 11.

©2026 by Crafco, Inc. All Rights Reserved

Table 8-2 Burner Electrical Troubleshooting Part 2 (continued)

Step	Possible Cause	If . . .
11	Is there 12Vdc between the red wire on top-left terminal of ignition switch and nearby ground source (black wire)?	• Yes, check for loose or broken wires between the ignition switch and bottom terminal of circuit breaker. • No, go to Step 11a.
11a	Is there 12Vdc between red wire on both red wires on the crank lockout relay in the control box (left relay next to the burner relay) and nearby ground source (black wire)?	• Yes, power on one red wire only, replace the crank lockout relay. • No power on either red wire on the crank lockout relay, go to Step 12.
12	Is there 12Vdc between blue wire on starter solenoid and nearby ground source (black wire or bare metal on engine case)?	• Yes, check for loose or broken wire between starter solenoid and ignition switch. • No, go to step 13.
13	Check connections and condition of red battery cable.	• Yes, there should be 12Vdc at all previous steps. • No, replace battery cable.

8.2 Burner Lights but Shuts Down After 15 Seconds

Table 8-3 Burner Lights but Shuts Down After 15 Seconds

Step	Possible Cause	If . . .
1	Does the CAD EYE have soot or dirt on the lens?	• Yes, clean cad eye lens with a soft cloth. No, go to Step 2.
2	Are the two yellow wires for the CAD EYE loose or broken?	• Yes, repair or replace as needed. No, go to Step 3.
3	Is the CAD EYE faulty?	• Yes, replace CAD EYE. No, call a Crafco service technician.

©2026 by Crafco, Inc. All Rights Reserved

8.3 Electrical Schematic

Figure 8-1 Electrical Schematic (PN 26582P4)

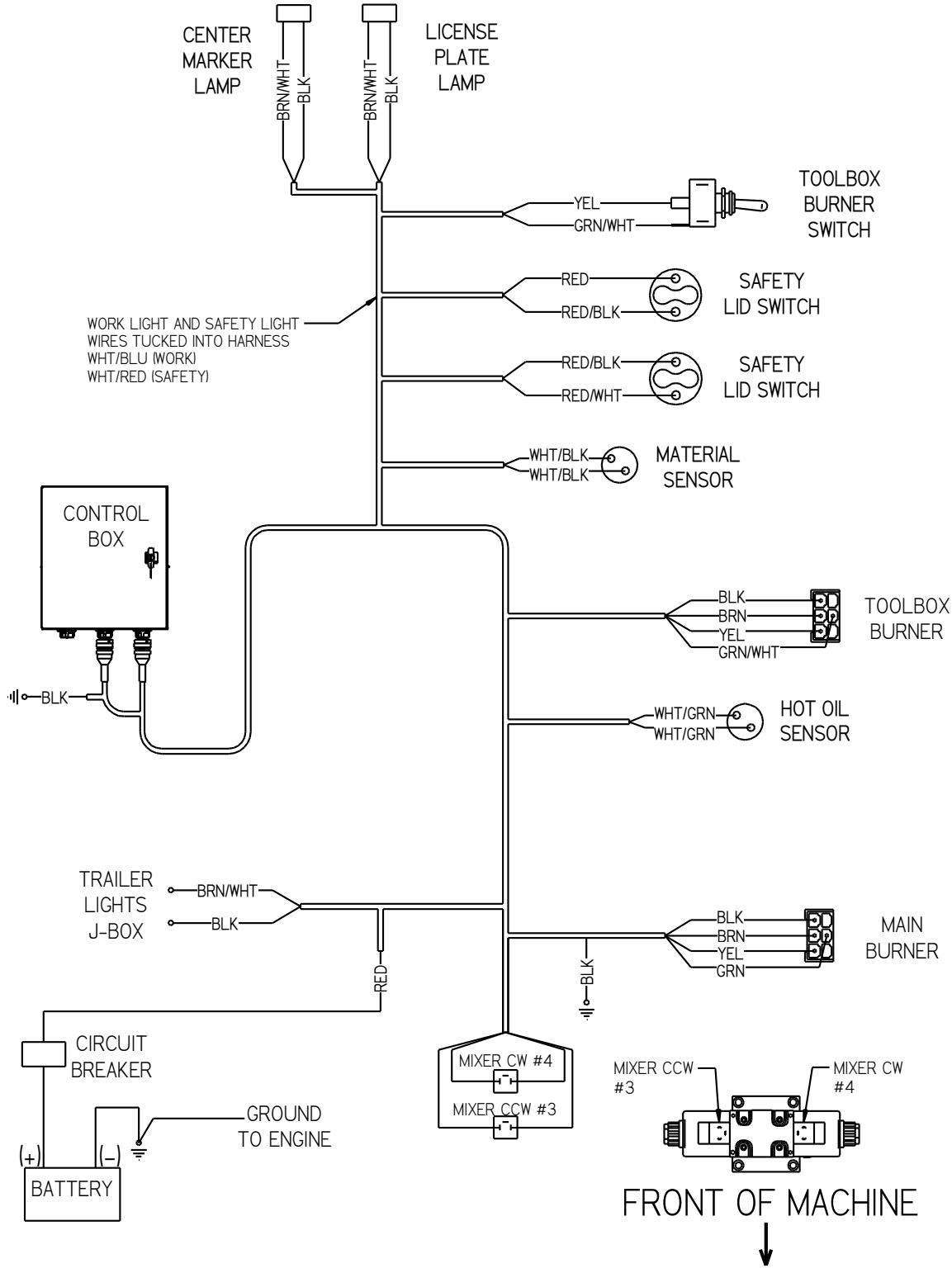

©2026 by Crafco, Inc. All Rights Reserved

8.4 Thermostat (Oil/Material LCD Display) Troubleshooting

Table 8-4 Thermostat (Oil/Material) Troubleshooting

Step	Possible Cause	If . . .
1	Is the LCD display dark when main burner switch is ON and KEY switch is ON?	• Yes, check for low/no voltage (below 7.5V) at thermostat (PakStat) board or reversed ribbon cable connector, or bad ribbon cable or bad thermostat board (PakStat) • No, go to step 2
2	Does LCD display show “Low Batt”?	• Yes, check for low voltage at thermostat board (PakStat) or damaged ribbon cable. • No, go to step 3
3	Does LCD show erratic numbers that are counting up, down or changing by more than 1 or 2 degrees?	• Yes, check for bad ribbon cable or bad thermostat board (PakStat) • No, go to step 4
4	Does the LCD display show “-1”?	• Yes – there is a short circuit in the wires between the thermostat board (PakStat) and the associated RTD sensor. • No, go to step 5
5	Does the LCD display show “1”? (without the minus/hyphen in front)	• Yes – there is an open circuit (break in the circuit) between the thermostat board (PakStat) and the associated RTD sensor. • No, go to Step 6
6	Are there black spots in the LCD display?	• Yes – display glass is cracked. Replace LCD display module. • No, call Crafco Inc and speak to a customer service technician

©2026 by Crafco, Inc. All Rights Reserved

Chapter 8 Troubleshooting

8.5 Testing the DC Controller

Table 8-5 Testing the DC Controller

Step	Bench Test DC Controller
1	Remove all wire nuts attaching the DC Controller to the burner.
2	Attach the black ground wire to the negative battery post.
3	Attach the red wire to the positive battery post.
4	Attach the white (Enable) wire to the positive battery post to start the test. (Genesis II Controllers will have a 15-second delay.) • Orange (Blower Motor) wire should have 12Vdc (all the time). • Blue (Igniter) wire should have 12Vdc. • Purple (Fuel Solenoid) wire should have 12Vdc (after the delay).
5	Twist the yellow wires together (once voltage registers) on the orange, blue and purple wires. • Orange (Blower Motor) wire should maintain 12Vdc. • Blue (Igniter) wire should lose voltage after 15 seconds. • Purple (Fuel Solenoid) wire should maintain 12Vdc.
6	If any of the above tests fail, replace the DC Controller.

8.6 Fuel Solenoid Troubleshooting

Table 8-6 Fuel Solenoid Troubleshooting

Step	Fuel Solenoid Test
1	Remove cord set from fuel solenoid.
2	Check the ohms between the terminals of fuel solenoid.
3	If the reading is between 15-25 ohms the coil is good.
4	If the reading is outside the above range or the meter indicates an open circuit, replace the fuel solenoid with part 41933 and valve stem with part 41932.

©2026 by Crafco, Inc. All Rights Reserved

Chapter 8 Troubleshooting

8.7 Ignition Coil Troubleshooting

Table 8-7 Ignition Coil Troubleshooting

Step	Ignition Coil Test
1	Make sure the burner is off.
2	Check resistance between each of the springs and the ground (exposed metal on the burner).
3	The meter should read less than 2000 ohms. (Take note of the readings, you will use them in Step 5.)
4	Check resistance between both springs. (Take note of the reading, you will use it in Step 5.)
5	The igniter should be replaced if: • The difference between the two springs to ground resistance reading is greater than 20%. • Or the spring-to-spring resistance does not read approximately twice the spring to ground.

8.8 Bleeding the Diesel Burners

Table 8-8 Bleeding the Diesel Burners

Step	Bleeding the Diesel Burners
1	Both the main burner and heated toolbox burner are equipped with automatic bleeding systems. During the startup sequence of the burner, it should automatically bleed any air from the fuel system.
2	In the event you are not getting fuel to the burner, make sure the shut off valves are both open and your fuel filters are not clogged or leaking. Replace and/or tighten, as necessary.
3	If you still are not getting fuel to the burner, check to make sure the fuel pump drive coupler inside the burner is not melted. If it is, replace it with part 41970. If it is connected, then the fuel pump may need replacement with part number 41892.

©2026 by Crafco, Inc. All Rights Reserved

8.9 Smoke Coming Out of the Exhaust Stack

Table 8-9 Smoke Coming Out of the Exhaust Stack

Step	Smoke Coming Out of the Exhaust Stack
1	White smoke indicates that there is too much air being forced though the burner. Loosen the Air Shutter screw and rotate the Air Shutter clockwise to increase air and counterclockwise to reduce air. Refer to Figure 8-3 Diesel Burner Air Settings, for the proper air settings and diagram.
2	Black smoke indicates that there is too much fuel being forced through the burner nozzle or there is not enough air being forced through the burner. First check the battery voltage, then move to the air settings, then move to the electrode assembly.
3	Using a 7/16" wrench, remove the copper fuel line nut attached to the nozzle line. Refer to Figure 8-2 Diesel Burner Electrode Adjustment. Next remove the locking nut for the nozzle tube. Then loosen the locking tabs on the ignition coil and open the ignition coil. Remove the nozzle line assembly.
4	Using Figure 8-2 Diesel Burner Electrode Adjustment, make sure the electrodes are in the correct position. Loosen the clamp holding the electrodes in place so they can be adjusted. Inspect the porcelain ceramic insulator for any cracks. Also check the tip of each of the electrodes to make sure they still have a sharp point and are not rounded off.
5	If it has been longer than 500 hours since the last time the burner nozzle was replaced, Crafco recommends replacing the burner nozzle at this time.
6	Reassemble the burner, using the reverse order in Step 3.
7	Remove the burner assembly by removing the four (4) 3/8" nuts holding the burner to the burner box.
8	Using an inspection mirror, make sure the insulation inside the burner box is not soaked with diesel fuel.
9	If the insulation is soaked with diesel fuel, you will need to remove the burner box and replace the insulation.
10	Reassemble the burner box and burner.

©2026 by Crafco, Inc. All Rights Reserved

8.10 Burner Electrode Adjustment

Figure 8-2 Diesel Burner Electrode Adjustment

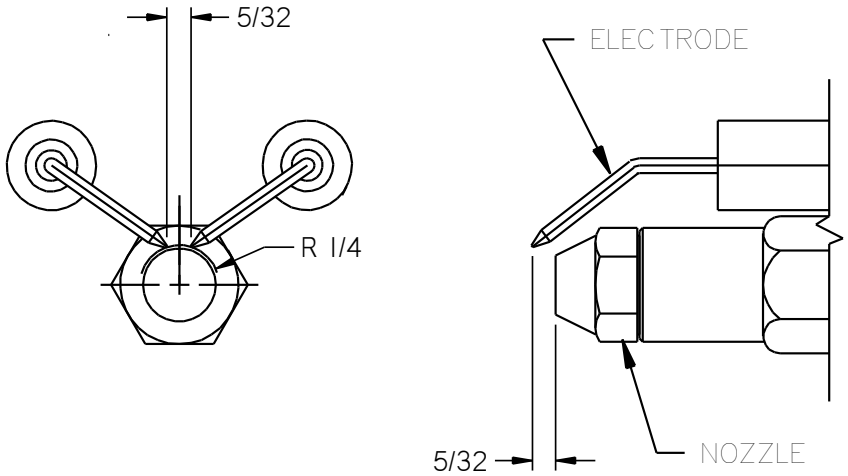

8.11 Burner Air Settings

Table 8-10 Burner Air Settings

	Main Burner Settings	Toolbox Burner Settings
Air Shutter	7	4
Air Band	7	0
Fuel Pressure	140 PSI	140 PSI

Figure 8-3 Diesel Burner Air Settings

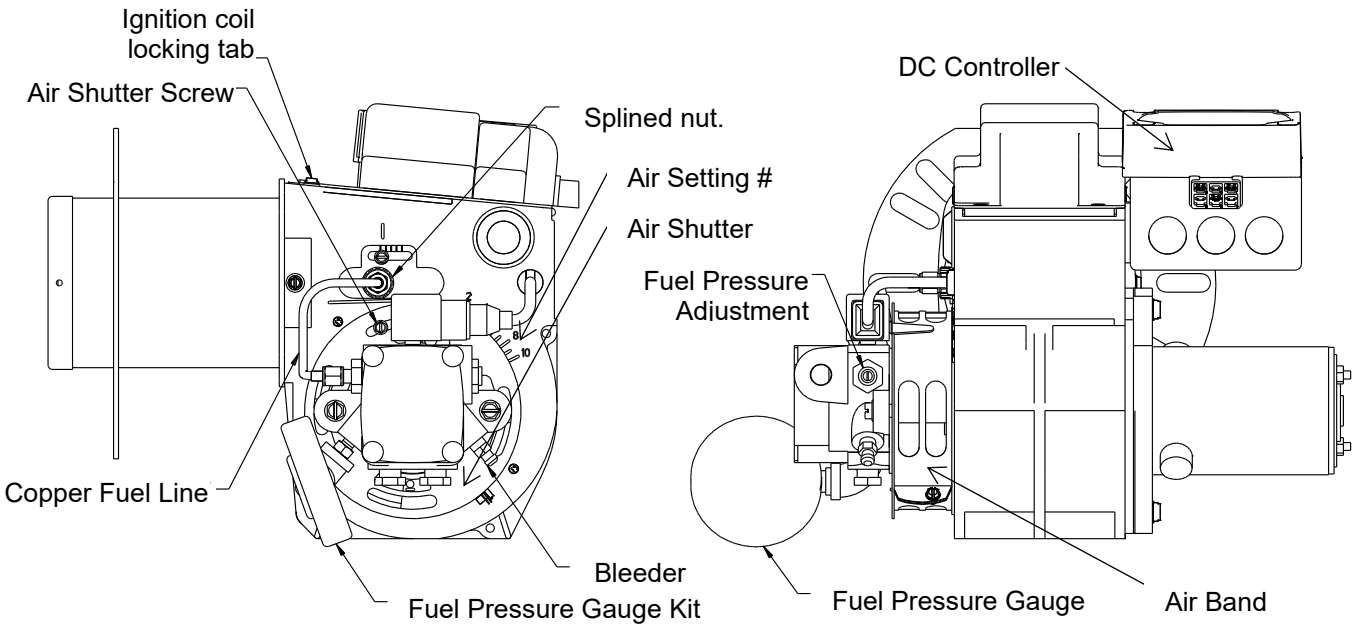

©2026 by Crafco, Inc. All Rights Reserved

Chapter 8 Troubleshooting

8.12 Material is Heating Slowly

Table 8-11 Material is Heating Slowly

Step	Material is Heating Slowly
1	With the material level half or less, open the loading lid and inspect the inside edge of the material tank. Check if there is a buildup of old, dried out and hardened material along the top half of the material tank.
2	If this is the case, you will need to drain out (use up) the rest of the material inside the tank. When the tank is empty, use an air chisel to remove this built up material. Remove as much as possible all around the tank including the roof of the material tank. Remove all the old material chunks from the bottom of the material tank. This should be done every 500 hours or as conditions require.
3	Check your level of the heat transfer oil, the mark on the dipstick is for 70°F.
4	Check your records of the last service replacement of the heat transfer oil. If it has been longer than 500 hours, or one year, you need to change your oil.
5	Many of Crafco service centers can perform these service steps for you if you cannot. Call your local service center to learn more.

8.13 Mixer Troubleshooting

8.13.1 Symptom: Mixer Does Not Rotate

Table 8-12 Mixer Basic Visual Troubleshooting

Step	Possible Cause	If . . .
1	Start Troubleshooting at the control box. Is the Mixer Control Switch Up or Down?	• Yes, go to Step 2. • No, flip switch to desired rotation.
2	Is the loading door closed?	• Yes, go to Step 3. • No, shut the loading door.
3	Is the "Mixer Control" toggle switch in the "Clockwise" position?	• Yes, go to Step 4. • No, move the toggle switch to the Clockwise position.
4	Move the "Mixer Control" toggle switch to the “C ’Clockwise” position. Is the agitator moving?	• Yes, Go to Step 5. • No, go to Table 8-14 Mixer Electrical Troubleshooting

©2026 by Crafco, Inc. All Rights Reserved

Table 8-13 Mixer Basic Visual Troubleshooting (continued)

Step	Possible Cause	If . . .
5	Open the Material loading door. Are there more than six (20) un-melted blocks in the tank?	• Yes, this can cause the agitator to jam. Use the mixer toggle switch to move the agitator forward and backward until the material melts enough to allow forward movement without jamming. • No, go to Table 8-14 Mixer Electrical Troubleshooting.
6	Is the hydraulic fluid level near the center of the sight gauge or higher?	• Yes, go to Step 7. • No, fill oil to the center of the sight gauge.
7	Is the hydraulic pressure too low?	• Yes, reset pressure. See Table 8-17 Mixer Hydraulic Troubleshooting Step 3. • No, go to Table 8-12 Mixer Electrical Troubleshooting

Table 8-14 Mixer Electrical Troubleshooting

Step	Possible Cause	If . . .
1	Does the lid make full contact with the switch?	• Yes, go to Step 1a. • No, adjust the switch location so the lid activates the switch.
1a	Does the lid switch make continuity when it is fully depressed? Use an Amp meter set to continuity and check both studs on the switch.	• Yes, go to Step 2. • No, the lid switch is bad. Replace the switch.
2	Is there 12Vdc between the lid switch red wire and a nearby ground source? (Check both red and green wires on the bottom of the lid switch with the lid closed.)	• Yes, on both wires go to Step 3. • Yes, on only one red wire when the lid is closed. Readjust the lid switch so that the lid completely depresses the switch and then recheck for 12Vdc. If the same result happens, replace the lid switch. • No, check for a blown fuse, broken wire or poor wire crimp between the lid switch and the engine ignition switch.
3	Is there continuity between the green wire on the lid switch and the green wire on the mixer switch?	• Yes, go to step 4. • No, check for a broken wire or poor wire crimp on the green wire and terminals.

©2026 by Crafco, Inc. All Rights Reserved

Table 8-15 Mixer Electrical Troubleshooting (continued)

Step	Possible Cause	If . . .
4	Is there 12Vdc between the "Mixer" toggle switch center post green wire and the main black ground wires?	• Yes, go to Step 5. • No, check for a broken wire or poor wire crimp between the "Mixer" toggle switch and the lid switch.
5	Is there 12Vdc between the "Mixer" toggle switch bottom post pink wire and the main black ground wires? (With the "Mixer" toggle switch in the "Clockwise" position.)	• Yes, go to Step 6. • No, replace the "Mixer" toggle switch.
6	Is the din plug light "ON" when the "Mixer" is in the "Clockwise" position? (Looking down at the top of the hydraulic valve, Mixer up is the din plug marked Clockwise.) (Refer to Figure 8-6 Din Plug Layout	• Yes, go to Step 7. • No, replace the din plug.
7	Unscrew the din plug center screw so you can pull the din plug up about 1/4" in order to check for voltage. Is there 12Vdc from side post to side post? (Refer to Figure 8-4 Checking Din Plug Voltage)	• Yes, the electrical system for the mixer is working properly, go to Table 8-17 Mixer Hydraulic Troubleshooting. • No, recheck the amber light, if the light comes "ON" and you do not have 12Vdc then replace the din plug.
8	Clockwise mixing works but “C ‘Clockwise” does not.	• Yes, go to Step 9.
9	Is there 12Vdc between the "Mixer" toggle switch top post purple wire and the main black ground wires? (With the "Mixer" toggle switch in the "C’ Clockwise" position.)	• Yes, go to Step 10. • No, replace the "Mixer" toggle switch.

©2026 by Crafco, Inc. All Rights Reserved

Table 8-16 Mixer Electrical Troubleshooting (continued)

Step	Possible Cause	If . . .
10	Is the din plug light "ON" when the "Mixer" is in the "C 'Clockwise" position? (Looking down at the top of the hydraulic valve, Mixer down is the din plug marked Counterclockwise.) (Refer to Figure 8-6 Din Plug Layout).	• Yes, go to Step 11. • No, replace the din plug.
11	Unscrew the din plug center screw so you can pull the din plug up about 1/4", so you can check for voltage. Is there 12Vdc from side post to side post? (Refer to Figure 8-4 Checking Din Plug Voltage)	• Yes, the electrical system for the mixer is working properly, go to Table 8-17 Mixer Hydraulic Troubleshooting. • No, recheck the din plug light, if the light comes "ON" and you do not have 12Vdc then replace the din plug.

Figure 8-4 Checking Din Plug Voltage



©2026 by Crafco, Inc. All Rights Reserved

8.14 Mixer Hydraulic Troubleshooting

Table 8-17 Mixer Hydraulic Troubleshooting

Step	Possible Cause	If . . .
1	Does the coil magnetize when the din plug green light is "ON"?	• Yes, go to Step 2. • No, remove the din plug, then remove the coil by unscrewing the nut on the end of the coil. With the coil removed, re-attach the din, and place a metal screwdriver in the center of the coil and move it toward the side of the coil to see if the coil is magnetic. If it is not, recheck the din plug is plugged into the coil, and the green light is "ON". If it is still not magnetic, replace the coil.
2	Is the relief pressure set correctly? (Refer to Figure 8-5 Hydraulic Pressure Adjustment Location for pressure settings.)	• Yes, go to Step 3. • No, first turn "OFF" the engine, then remove one of the two hydraulic hoses going to the agitator hydraulic motor, cap off the fitting on the motor and use a 3,000 PSI gauge with the proper JIC fitting, attach it to the hose. Start the engine, turn "ON" the main power in the control box, move the "Mixer" toggle switch to the "Clockwise" position and read the pressure gauge. If the pressure needs to be adjusted, use the pressure relief valve labeled "RVA", loosen the jam nut and adjust the pressure with the Allen screw at the end of the relief. Turn clockwise to increase pressure and counterclockwise to reduce pressure, then tighten the jam nut to lock the pressure. Next turn "OFF" the engine, remove the cap, pressure gauge, and reattach the hose.
3	Is the hydraulic flow correct from the hydraulic pump?	• Yes, call Crafco and speak to customer service. • No, call a local hydraulic shop to see if they can run a hydraulic pump flow test, using the information in Figure 8-5 Hydraulic Pressure Adjustment Location

©2026 by Crafco, Inc. All Rights Reserved

Figure 8-5 Hydraulic Pressure Adjustment Location

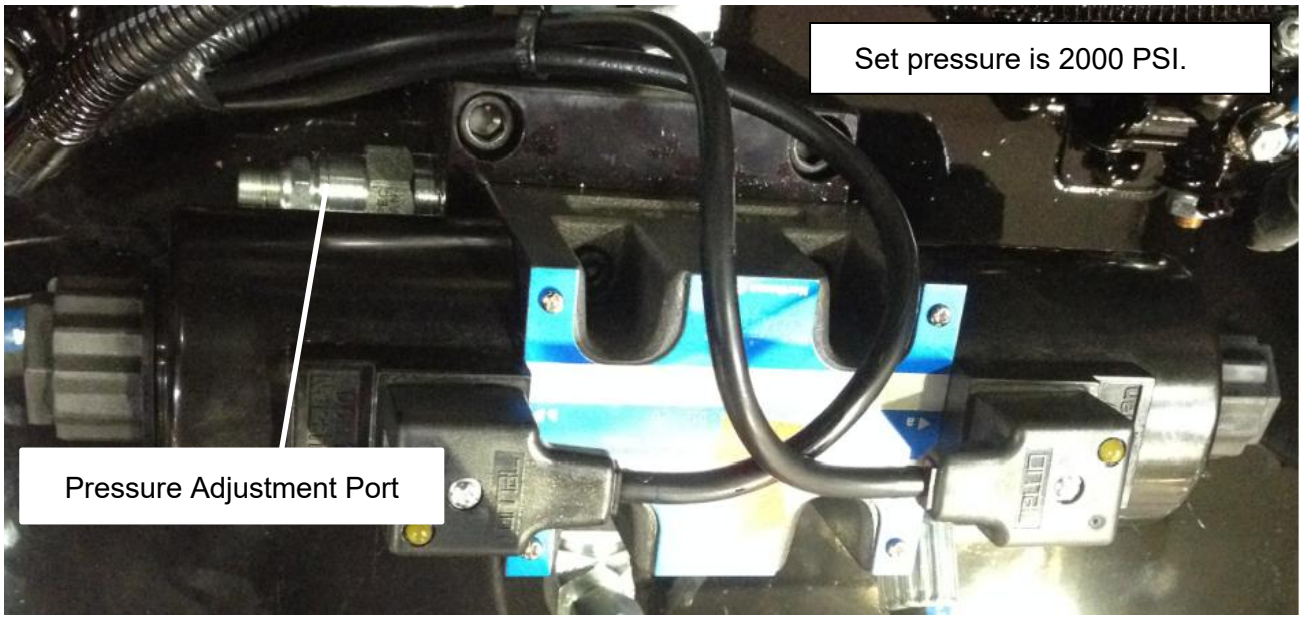

Figure 8-6 Din Plug Layout

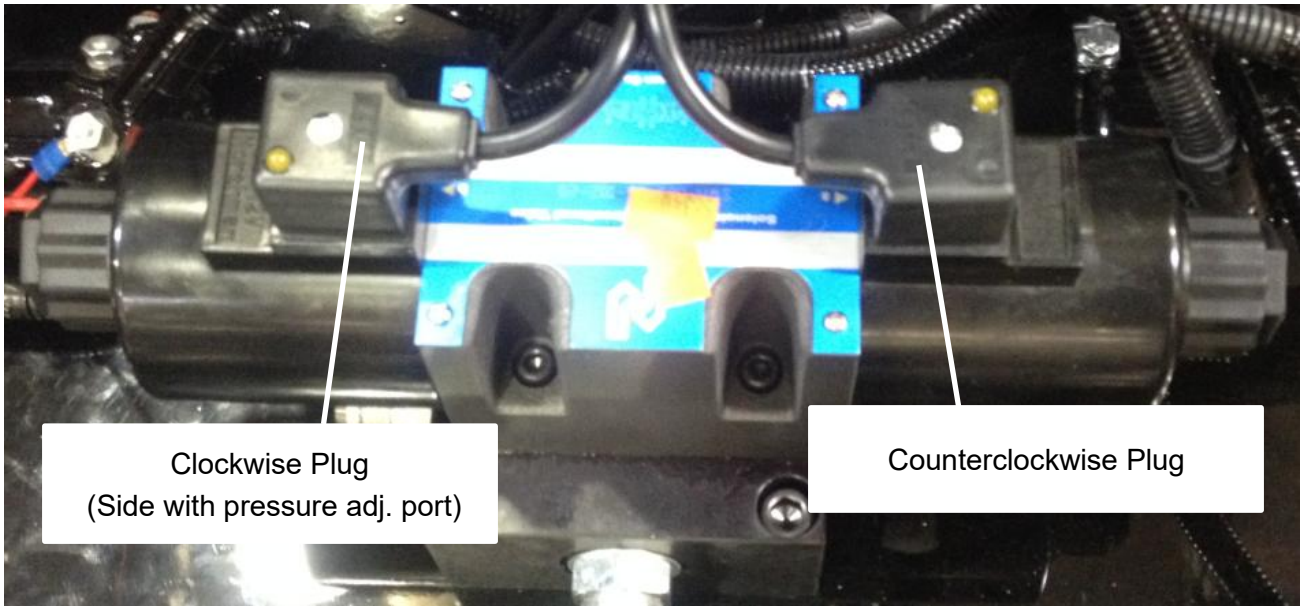

©2026 by Crafco, Inc. All Rights Reserved

8.15 Hydraulic Schematic

Figure 8-7 Hydraulic Schematic (P/N 56690N)

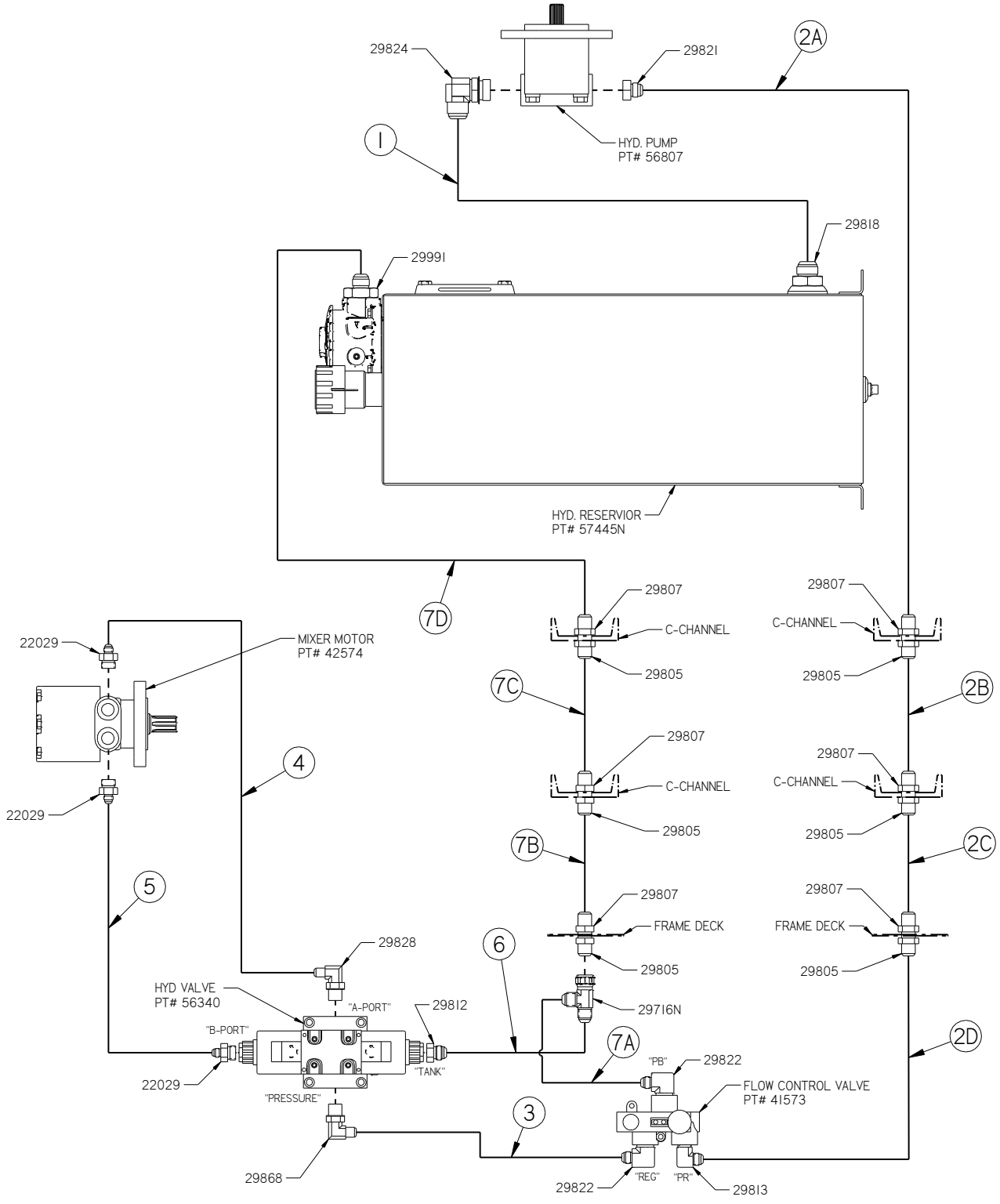

8.16 RTD Sensor Ohms vs. Temperature

Table 8.15 below shows what the ohm reading should be for a given temperature. The following are the instructions for using the table.

1. Measure the resistance (ohms) of the sensor in question with an ohm meter.
2. Find the reading in the chart (columns 0 through 9).
3. Follow the row to the left and get the temperature in 10°F increments, then follow the column up to get the 1°F increment. (For example, 1391 Ohms = 215°F)

Table 8-18 RTD Sensor Ohms vs. Temperature

°F	0	1	2	3	4	5	6	7	8	9
0	930.3	932.5	934.7	936.9	939.1	941.3	943.4	945.6	947.8	950.0
10	952.2	954.3	956.5	958.7	960.9	963.0	965.2	967.4	969.6	971.8
20	973.9	976.1	978.3	980.5	982.6	984.8	987.0	989.1	991.3	993.5
30	995.7	997.8	1000.0	1002.2	1004.3	1006.5	1008.7	1010.9	1013.0	1015.2
40	1017.4	1019.5	1021.7	1023.9	1026.0	1028.2	1030.4	1032.5	1034.7	1036.9
50	1039.0	1041.2	1043.4	1045.5	1047.7	1049.8	1052.0	1054.2	1056.3	1058.5
60	1060.7	1062.8	1065.0	1067.1	1069.3	1071.5	1073.6	1075.8	1077.9	1080.1
70	1082.2	1084.4	1086.6	1088.7	1090.9	1093.0	1095.2	1097.3	1099.5	1101.6
80	1103.8	1106.0	1108.1	1110.3	1112.4	1114.6	1116.7	1118.9	1121.0	1123.2
90	1125.3	1127.5	1129.6	1131.8	1133.9	1136.1	1138.2	1140.4	1142.5	1144.7
100	1146.8	1149.0	1151.1	1153.2	1155.4	1157.5	1159.7	1161.8	1164.0	1166.1
110	1168.3	1170.4	1172.5	1174.7	1176.9	1179.0	1181.1	1183.3	1185.4	1187.5
120	1189.7	1191.8	1194.0	1196.1	1198.2	1200.4	1202.5	1204.6	1206.8	1208.9
130	1211.0	1213.2	1215.3	1217.5	1219.6	1221.7	1223.9	1226.0	1228.1	1230.3
140	1232.4	1234.5	1236.7	1238.9	1240.9	1243.0	1245.2	1247.3	1249.4	1251.6
150	1253.7	1255.8	1258.0	1260.1	1262.2	1264.3	1266.5	1268.6	1270.7	1272.8
160	1275.0	1277.1	1279.2	1281.3	1283.5	1285.6	1287.7	1289.8	1292.0	1294.1
170	1296.2	1298.3	1300.4	1302.6	1304.7	1306.8	1308.9	1311.0	1313.2	1315.3
180	1317.4	1319.5	1321.6	1323.8	1325.9	1328.0	1330.1	1332.2	1334.3	1336.5
190	1338.6	1340.7	1342.8	1344.9	1347.0	1349.1	1351.2	1353.4	1355.5	1357.6
200	1359.7	1361.8	1363.9	1366.0	1368.1	1370.2	1372.4	1374.5	1376.6	1378.7
210	1380.8	1382.9	1385.0	1387.1	1389.2	1391.3	1393.4	1395.5	1397.6	1399.7
220	1401.8	1403.9	1406.0	1408.1	1410.3	1412.4	1414.5	1416.6	1418.7	1420.8
230	1422.9	1425.0	1427.1	1429.2	1431.3	1433.4	1435.5	1437.6	1439.6	1441.7
240	1443.8	1445.9	1448.0	1450.1	1452.2	1454.3	1456.4	1458.5	1460.6	1462.7
250	1464.8	1466.9	1469.0	1471.1	1473.2	1475.3	1477.3	1479.4	1481.5	1483.6
260	1485.7	1487.8	1489.9	1492.0	1494.1	1496.1	1498.2	1500.3	1502.4	1504.5

©2026 by Crafco, Inc. All Rights Reserved

Table 8-15.1 RTD Sensor Ohms vs. Temperature (continued)

°F	0	1	2	3	4	5	6	7	8	9
270	1506.6	1508.7	1510.8	1512.8	1514.9	1517.0	1519.1	1521.2	1523.3	1525.3
280	1527.4	1529.5	1531.6	1533.7	1535.7	1537.8	1539.9	1542.0	1544.1	1546.1
290	1548.2	1550.3	1552.4	1554.5	1556.5	1558.6	1560.7	1562.8	1564.8	1566.9
300	1569.0	1571.1	1573.1	1575.2	1577.3	1579.4	1581.4	1583.5	1585.6	1587.7
310	1589.7	1591.8	1593.9	1595.9	1598.0	1600.1	1602.2	1604.2	1606.3	1608.4
320	1610.4	1612.5	1614.6	1616.6	1618.7	1620.8	1622.8	1624.9	1627.0	1629.0
330	1631.1	1633.2	1635.2	1637.3	1639.3	1641.4	1643.5	1645.5	1647.6	1649.7
340	1651.7	1653.8	1655.8	1657.9	1660.0	1662.0	1664.1	1666.1	1668.2	1670.2
350	1672.3	1674.4	1676.4	1678.5	1680.5	1682.6	1684.6	1686.7	1688.7	1690.8
360	1692.9	1694.9	1697.0	1699.0	1701.1	1703.1	1705.2	1707.2	1709.3	1711.3
370	1713.4	1715.4	1717.5	1719.5	1721.6	1723.6	1725.7	1727.7	1729.8	1731.8
380	1733.9	1735.9	1737.9	1740.0	1742.0	1744.1	1746.1	1748.2	1750.2	1752.3
390	1754.3	1756.3	1758.4	1760.4	1762.5	1764.5	1766.6	1768.6	1770.6	1772.7
400	1774.7	1776.8	1778.8	1780.8	1782.9	1784.9	1786.9	1789.0	1791.0	1793.1
410	1795.1	1797.1	1799.2	1801.2	1803.2	1805.3	1807.3	1809.3	1811.4	1813.4
420	1815.4	1817.5	1819.5	1821.5	1823.6	1825.6	1827.6	1829.6	1831.7	1833.7
430	1835.7	1837.8	1839.8	1841.8	1843.8	1845.9	1847.9	1849.9	1851.9	1854.0
440	1856.0	1858.0	1860.0	1862.1	1864.1	1866.1	1868.1	1870.2	1872.2	1874.2
450	1876.2	1878.2	1880.3	1882.3	1884.3	1886.3	1888.3	1890.4	1892.4	1894.4
460	1896.4	1898.4	1900.5	1902.5	1904.5	1906.5	1908.5	1910.5	1912.6	1914.6
470	1916.6	1918.6	1920.6	1922.6	1924.6	1926.6	1928.7	1930.7	1932.7	1934.7
480	1936.7	1938.7	1940.7	1942.7	1944.7	1946.8	1948.8	1950.8	1952.8	1954.8
490	1956.8	1958.8	1960.8	1962.8	1964.8	1966.8	1968.8	1970.8	1972.8	1974.8
500	1976.8	1978.8	1980.8	1982.9	1984.9	1986.9	1988.9	1990.9	1992.9	1994.9
510	1996.9	1998.9	2000.9	2002.9	2004.9	2006.9	2008.8	2010.8	2012.8	2014.8
520	2016.8	2018.8	2020.8	2022.8	2024.8	2026.8	2028.8	2030.8	2032.8	2034.8
530	2036.8	2038.8	2040.8	2042.8	2044.7	2046.7	2048.7	2050.7	2052.7	2054.7
540	2056.7	2058.7	2060.7	2062.7	2064.6	2066.6	2068.6	2070.6	2072.6	2074.6
550	2076.6	2078.5	2080.5	2082.5	2084.5	2086.5	2088.5	2090.4	2092.4	2094.4

©2026 by Crafco, Inc. All Rights Reserved

8.17 Engine Event History Log

8.17.1 How to Access Engine "Event History" in Digital Engine Controller for Non_ECU (Electronic Control Unit) Controlled Melters

The engines we use are non-ECU controlled, either from Isuzu or Deutz in the 25HP range. They are referred to as analog controlled engines and have a throttle solenoid to control the speed of the engine.

The digital engine controller stores operational fault events that trigger the "check engine light" that would cause the engine to shut down or not start for one reason or another. Listed below is how to access the "events history" to help diagnose why an engine may be malfunctioning by viewing start up, running and shutdown history. All the information is date, and time stamped. To access history, use the digital engine controller in the control box of the machine by pushing the following buttons:

- **Turn the key ON -> Press OFF button -> Press ENTER -> SCROLL to EVENTS History and Press ENTER -> use UP and DOWN buttons to scroll through the log.**

Some of the events it logs:

- Over speed, low oil pressure, high engine temp, under speed, and more!



©2026 by Crafco, Inc. All Rights Reserved

Chapter 9 Illustrated Parts List

9.0 About the Illustrated Parts List

The Illustrated Parts List (IPL) is designed to help technical service or maintenance personnel correctly identify orderable replacement parts.

The figure and table titles reference the part number (PN) to which they apply. The PN's for each of the Patcher 4 models are as follows:

Patcher II PN 56700

Illustrations and pictures are designed to show general shape and size of a part and the relationship that part has to other parts. Actual size and shape of parts or components may differ or vary from the actual part or component.

9.1 Ordering Crafco Parts

Crafco distributors and Crafco Pavement Preservation Supply Centers are strategically located throughout the United States. Parts can be ordered from your local Crafco distributor or directly from Crafco if a distributor is not available in your area.
When ordering parts, give the following information:

- Part Number
- Machine Model
- Serial Number

Call or Email Crafco at the following:
Crafco Customer Service
Phone: (602) 276-0406
CustomerService@crafco.com

Visit our website at www.crafco.com

©2026 by Crafco, Inc. All Rights Reserved

Chapter 9 Illustrated Parts List

9.2 Patcher 4 Parts List

Figure 9-1 Right ISO View

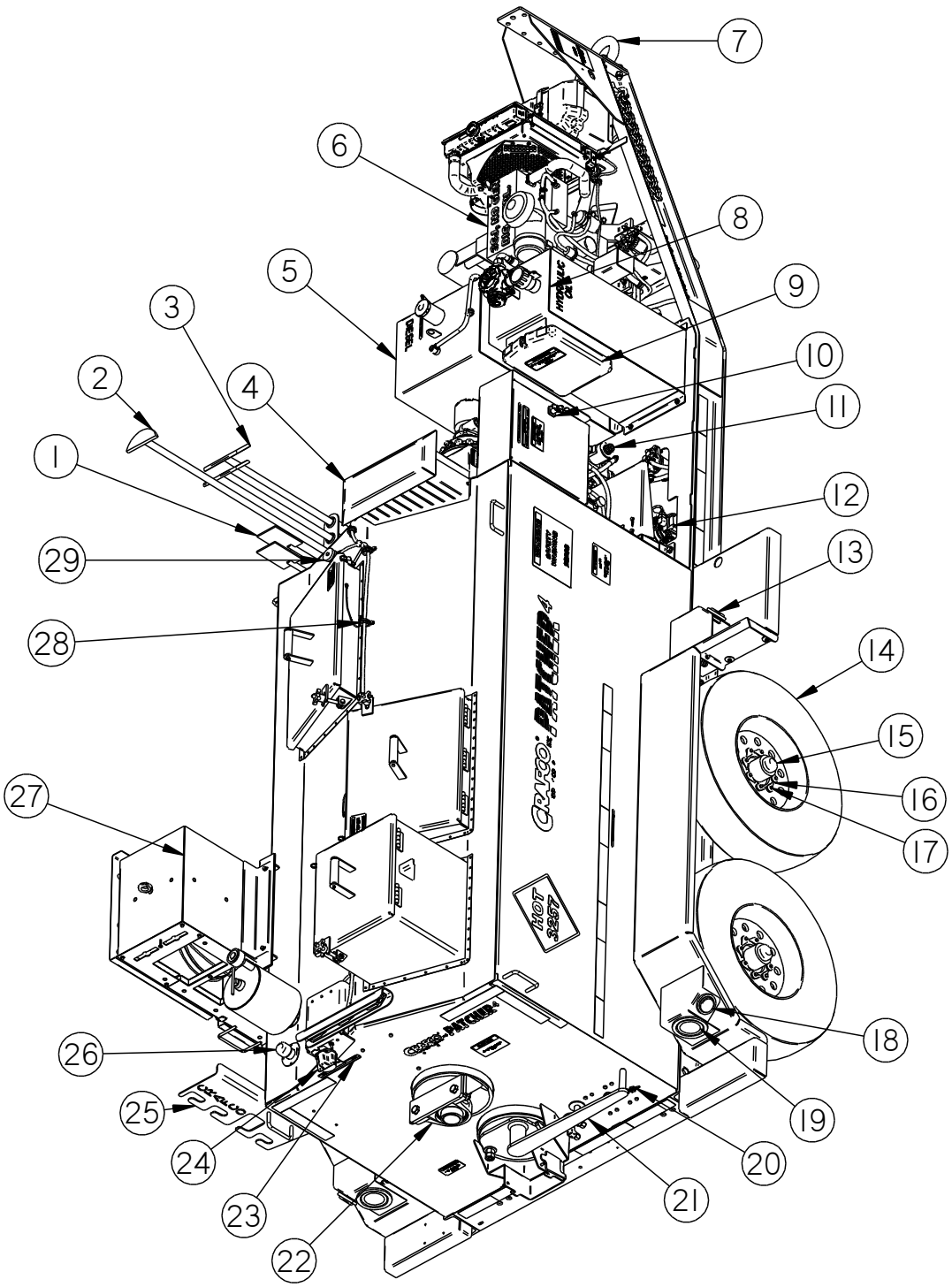

©2026 by Crafco, Inc. All Rights Reserved

Chapter 9 Illustrated Parts List

Table 9-1 Right Iso View Parts List

FIG.	ITEM	PART NO.	DESCRIPTION	QTY
Fig. 9.1	1	32246	CHUTE SCRAPER ASSEMBLY	2
	2	32258	TANK SCRAPER ASSEMBLY	1
	3	32243	TECHCRETE IRONING WAND ASSEMBLY	2
	4	56679N	VENT COVER	1
	5	57440S	FUEL TANK ASSEMBLY, 32 GALLON DOT	1
	6	47129N	ENGINE ASSY, ISUZU 3CJ1, D.E.C, NO GEN	1
	n/a	29399	ISOMOUNT (ENGINE TO FRAME NOT SHOWN)	4
	7	20014	3” PINTLE HITCH (OPTIONAL)	1
	8	57445S	HYDRAULIC TANK ASSEMBLY	1
	9	25289	RECORD BOX HOLDER	1
	10	47265N	CONTROL BOX, PATCHER, MODULAR	1
	11	56340	HYDRAULIC CONTROL VALVE	1
	12	46380	BURNER ASSEMBLY (NO NOZZLE OR HEAD)	1
	13	44796	2-1/2” LED YELLOW SIDE MARKER LIGHT	2
	14	56620N	WHEEL & TIRE ASSEMBLY, PATCHER 4	4
	15	56617N	TORSIONAL AXLE ASSEMBLY, 7500#	4
	16	23133N	WHEEL CHECK, 7/8”	32
	17	28570N	LUG NUT, 9/16”-18	32
	18	24040	2-1/2” LED RED SIDE MARKER LIGHT	2
	19	32363	RED STT LAMP	2
	20	91648	BOOM STOW SAFETY CHAIN ASSEMBLY	1
	21	57778	DISCHARGE GATE ASSEMBLY	1
	22	57813	BEARING, PILLOW BLOCK, 2-3/4” HI TEMP	2
	23	26099	LICENSE PLATE HOLDER	1
	24	44797	LICENSE PLACE LIGHT	1
	25	32404	OUTER TOOLBOX ASSEMBLY HOLDER	1
	26	28271	PIPE CAP, 1-1/4” NPT	1
	27	57450N	HEATED TOOLBOX, DIESEL FIRED	1
	28	32018	1” COVER CLAMP	34
	29	43465	RTD SENSOR W/18” STEM	1

©2026 by Crafco, Inc. All Rights Reserved

Chapter 9 Illustrated Parts List

Figure 9-2 Left ISO View

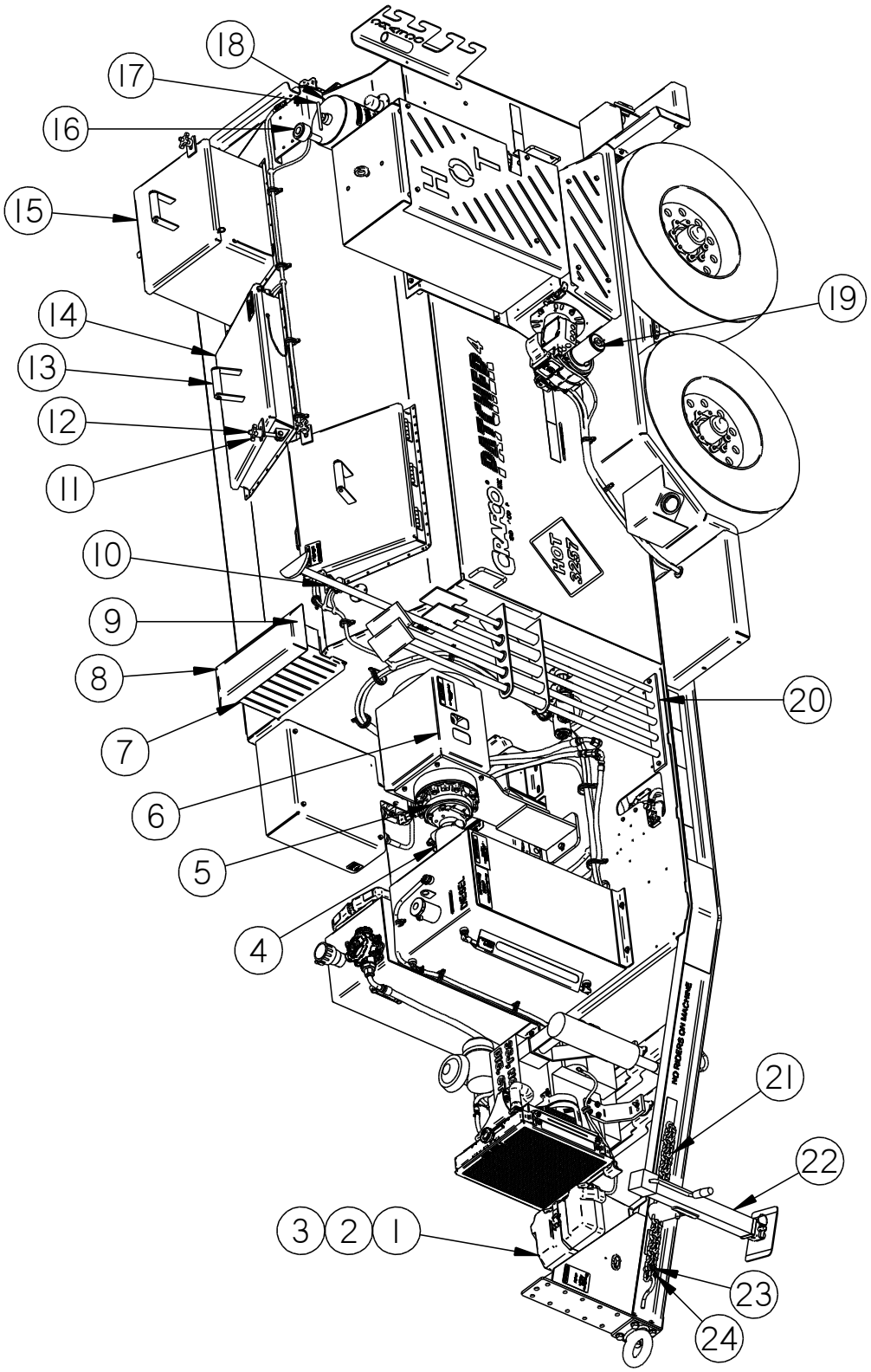

©2026 by Crafco, Inc. All Rights Reserved

Chapter 9 Illustrated Parts List

Table 9-2 Left View Parts List

FIG.	ITEM	PART NO.	DESCRIPTION	QTY
Fig. 9.2	1	24000	BATTERY, 12-VOLT	2
	2	24002	BATTERY BOX	2
	3	24037	BATTERY STRAP W/BUCKLE 4’	2
	4	42574	MIXER HYDRAULIC MOTOR	1
	5	57786	6:1 GEAR BOX ASSY	1
	6	57750	DRIVE COVER	1
	7	56681N	HEAT SHIELD VENT COVER	1
	8	56678N	VENT COVER ASSEMBLY	1
	9	56682N	HEAT SHIELD VENT BACK	1
	10	39608	AUTOSTOP LID SWITCH	2
	11	56816	CAST IRON KNOB	3
	12	56815	FEMALE THREADED ROD END	3
	13	27077	WOODEN HANDLE	3
	14	45786	LID ASSEMBLY, (SS250)	2
	15	45793	LID ASSEMBLY, (SS125)	1
	16	26025	AIR BREATHER & ELEMENT	1
	17	57775	HOT OIL DIPSTICK	1
	18	43355	OVERFLOW TANK ASSEMBLY	1
	19	57485N	HOT TOOLBOX BURNER ASSY-COMES SET UP WITH NOZZLE (PN 32403), BAFFLE (PN 32400), HEAD DIFFUSER (PN 32401)	1
	20	57885	TOOL REST PLATE	1
	21	29464	SAFETY CHAIN	2
	22	23082	5000# TONGUE JACK, 15”	1
	23	20144	3/8” CHAIN SHACKLE W/SCREW PIN	2
	24	20132	SHACKLE CONNECTING LINK	2

©2026 by Crafco, Inc. All Rights Reserved

Chapter 9 Illustrated Parts List

Figure 9-3 Top Section View

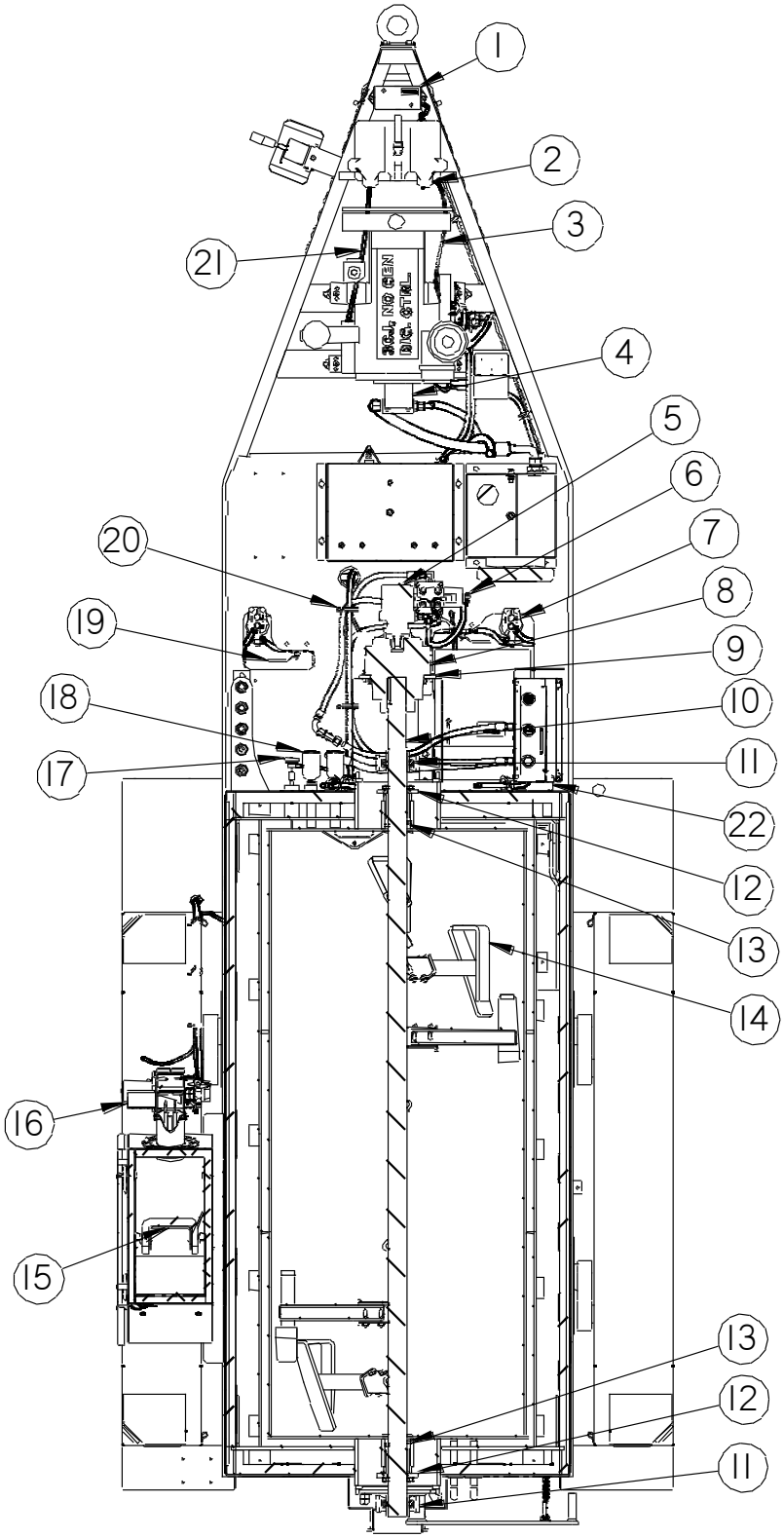

©2026 by Crafco, Inc. All Rights Reserved

Chapter 9 Illustrated Parts List

Table 9-3 Top Section View Parts List

FIG.	ITEM	PART NO.	DESCRIPTION	QTY
Fig.9.3	1	38020N	JUNCTION BOX, TRAILER LIGHT	1
	2	24010	BATTERY CABLE, BLACK, 4 GA X 15” L	1
	3	37038	BATTERY CABLE, BLACK, 4 GA X 29” L	1
	4	56807	HYDRAULIC PUMP	1
	5	42574	HYDRAULIC MIXER MOTOR	1
	6	56340	HYDRAULIC CONTROL VALVE	1
	7	47345N	FUEL FILTER ASSEMBLY, BURNER	2
	8	57786	6:1 GEAR BOX ASSEMBLY, SHAFT MOUNT	1
	9	57748	GEAR BOX MOUNT UPPER PLATE	1
	9A	57746	GEAR BOX MOUNT MID PLATE	1
	9B	57747	GEAR BOX MOUNT BASE	1
	10	56630N	MIXER MAIN SHAFT	1
	11	57813	BEARING, PILLOW BLOCK, 2-3/4” HI-TEMP	2
	12	57792	PACKING GLAND ASSEMBLY	2
	13	32423N	PACKING GLAND (82” – 10.25” Strips)	7FT
	14	56642N	PADDLE ASSEMBLY	8
	15	57475N	FUNNEL/CHUTE ASSY. W/INSULATION	1
	16	57485N	HOT TOOLBOX BURNER ASSY-COMES SET UP WITH NOZZLE (PN 32403), BAFFLE (PN 32400), HEAD DIFFUSER (PN 32401)	1
	17	43465	RTD SENSOR	1
	18	24190	OVERNIGHT HEATER, 110V	2
	19	29195	BRONZE BALL VALVE, 1/4”	2
	20	32029	2” COVERED CLAMP	11
	21	24015	BATTERY CABLE, POSITIVE, 4GA X 38”	1
	22	56960P	BURNER BOX ASSEMBLY, PAINTED (with insulation)	1

©2026 by Crafco, Inc. All Rights Reserved

9.3 Fuel and Hydraulic Tanks Parts List

Figure 9-4 Fuel and Hydraulic Tanks Section View

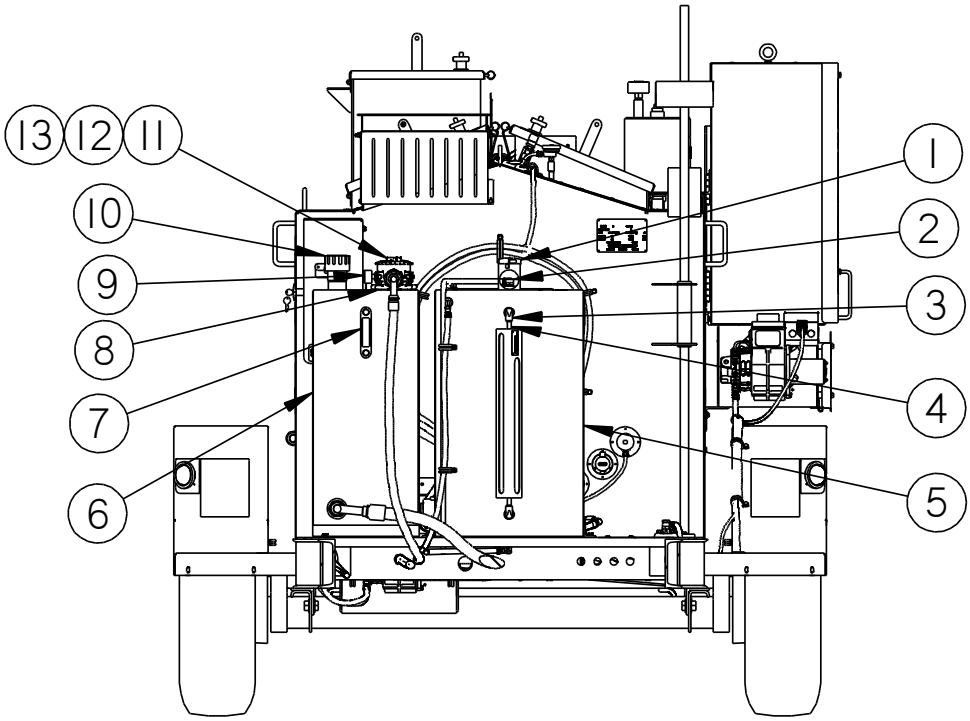

Table 9-4 Fuel and Hydraulic Tanks Parts List

FIG.	ITEM	PART NO.	DESCRIPTION	QTY
Fig. 9.4	1	43732N	CAP, NON-VENTED, DIESEL FUEL TANK	1
	2	43734N	VENT FUEL TANK SAFETY	1
	3	44817	FITTING, SIGHT TUBE – DIESEL	2
	4	44191	1/2” FUEL SIGHT TUBING,	2 FT
	5	57440S	FUEL TANK ASSEMBLY, 32 GALLON DIESEL	1
	6	57445S	HYDRAULIC TANK	1
	7	45415	SIGHT GUAGE (HYD)	1
	8	45497	BASE GASKET	1
	9	45437	HYDRAULIC FILTER GAUGE	1
	10	43579	HYDRAULIC TANK FILLER/BREATHER CAP	1
	11	45498	HYDRAULIC FILTER ASSEMBLY	1
	12	45438	HYDRAULIC FILTER ELEMENT	1
	13	44063	O-RING, UNDER FILTER CAP/COVER	1

©2026 by Crafco, Inc. All Rights Reserved

Chapter 9 Illustrated Parts List

This page is left blank on purpose.

©2026 by Crafco, Inc. All Rights Reserved

Chapter 9 Illustrated Parts List

9.4 Engine Parts List

Figure 9-5 Engine 47129N Isuzu Diesel

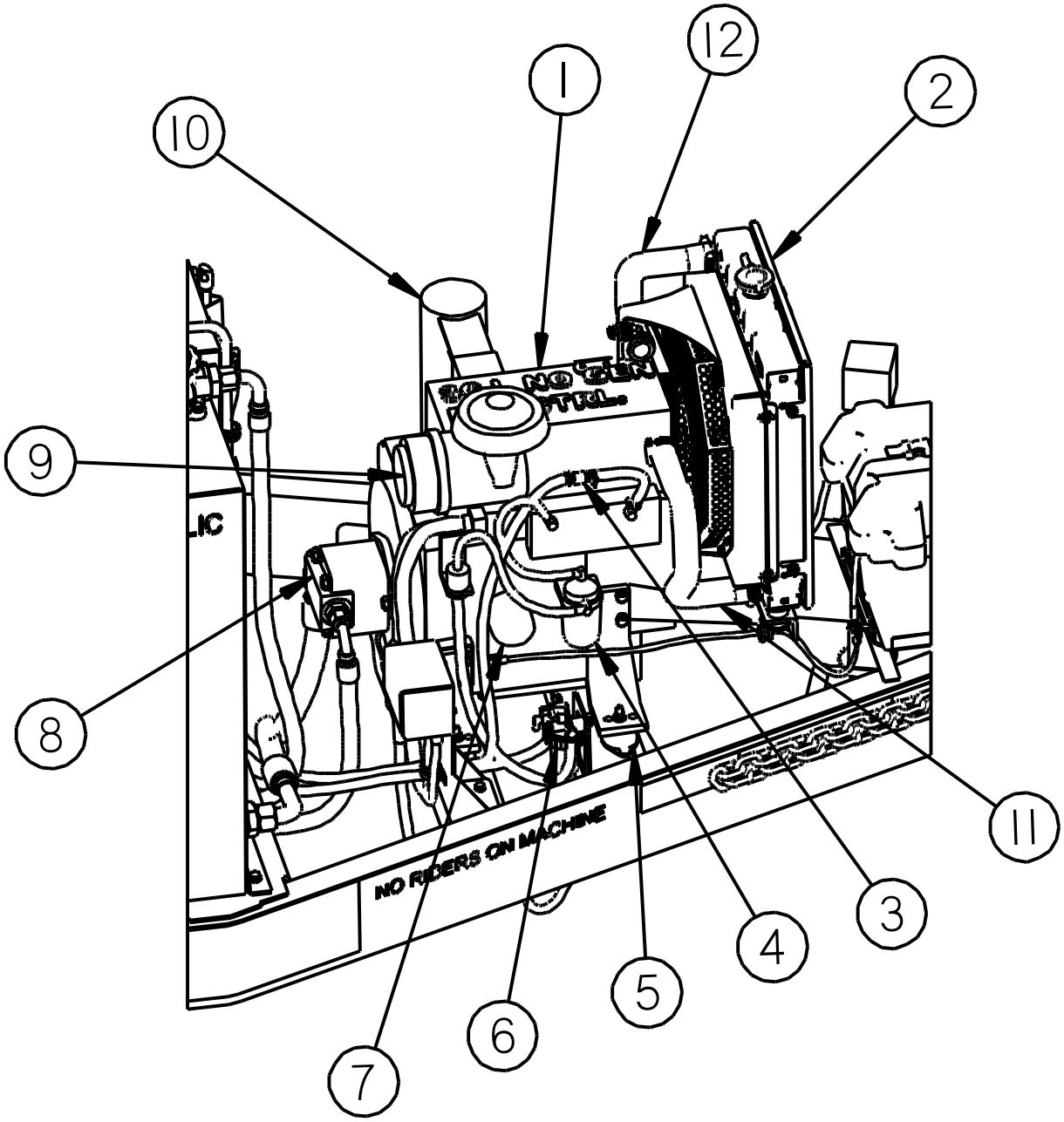

©2026 by Crafco, Inc. All Rights Reserved

Table 9-5 Engine Parts List 47129N Isuzu Diesel

	ITEM	PART NO.	DESCRIPTION	QTY
Fig. 9.5	1	47129N	ISUZU 20 HP 3CJ1 ENGINE, D.E.C. NO GEN.	1
	2	47158N	RADIATOR KIT	1
	3	47149N	CHECK VALVE	1
	4	41867	FUEL FILTER, ENGINE	1
	5	29399	ENGINE ISOMOUNT	4
	6	47150	WATER SEPARATOR	1
	7	45389	OIL FILTER, ENGINE	1
	8	56807	HYD. PUMP .5 IN/REV	1
	9	45391	AIR FILTER, ENGINE	1
	10	47188N	MUFFLER, 3CJ1, PATCHER II	1
	11	45444L	LOWER RADIATOR HOSE	1
	12	45444U	UPPER RADIATOR HOSE	1
	NS	45535	ENGINE COVER- OPTION (NOT SHOWN)	1
	NS	46374	ENGINE COVER INSULATION KIT- OPTION (NOT SHOWN)	1
	NS	47153	PARTS MANUAL ISUZU 3CJ1 ENGINE (NOT SHOWN)	1
	NS	47155N	RADIATOR OVERFLOW BOTTLE KIT (NOT SHOWN)	1

©2026 by Crafco, Inc. All Rights Reserved

9.5 Hydraulic Schematic and Parts List

Figure 9-6 Hydraulic Schematic (P/N 56690N)

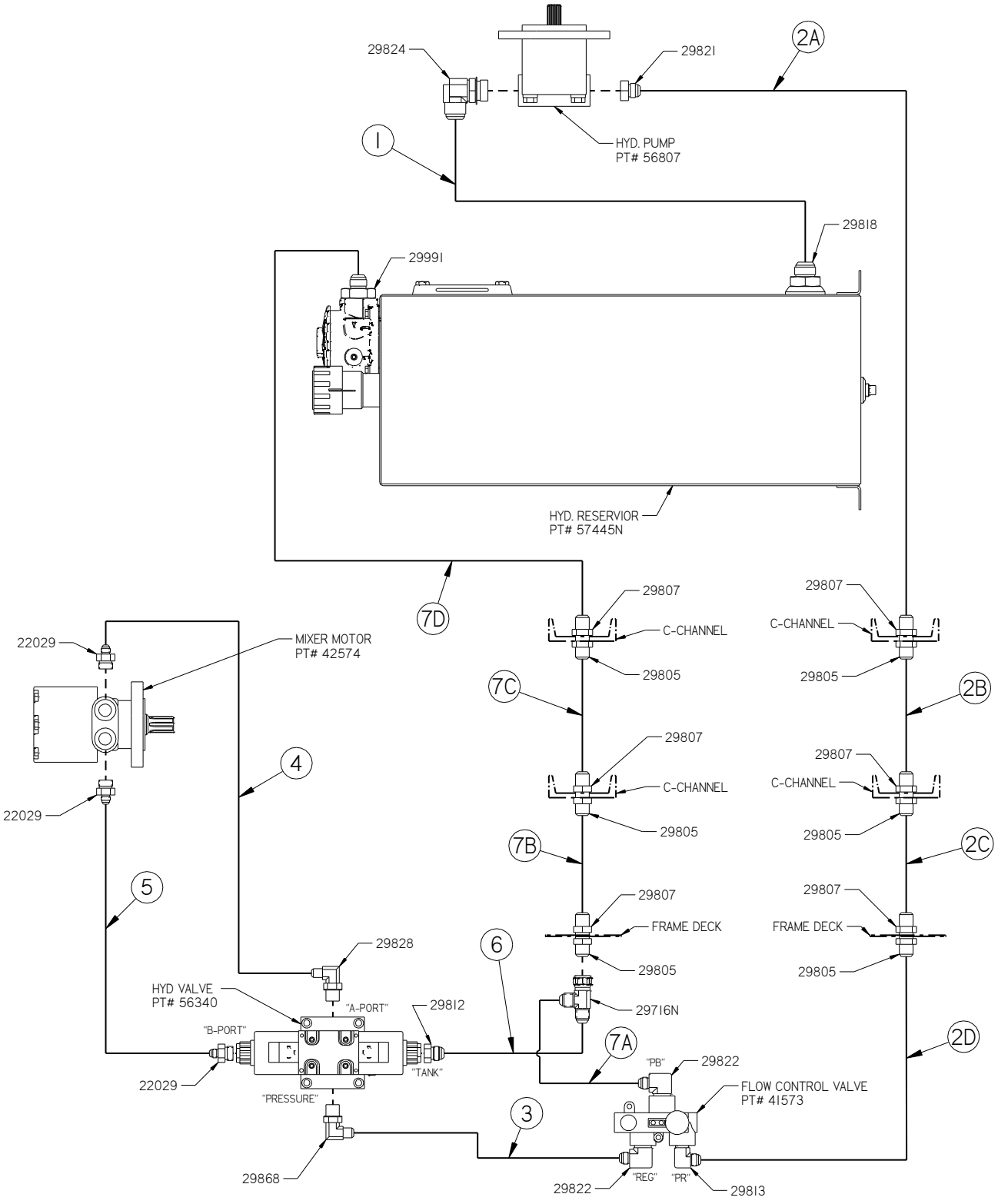

Table 9-6 Hydraulic Parts List

FIG	ITEM	PART NO.	DESCRIPTION	QTY
Fig.9.6	**1.**	**HYDRAULIC RESERVOIR TO HYDRAULIC PUMP (SUCTION)**		
		29818	1" TUBE X 1-1/4" STD THRD O-RING STR	1
	1	16G4H 16G-16FJX90S 16G-16FJX 32.5 27	32.5” SUCTION HOSE	1
		29824	1" TUBE X 1" STD THRD. O-RING 90° ELBW	1
	2.	**HYDRAULIC PUMP TO FLOW CONTROL VALVE “PR” PORT**		
		29821	5/8" TUBE X 3/4" STD. THRD. O-RING STR	1
	2A	10M3K 10G-10FJX90-036 10G-10FJX 25.5 22	HYD HOSE X 25 1/2" LONG	1
		29805	5/8" TUBE BULKHEAD FITTING	1
		29807	7/8-14 BULKHEAD LOCKNUT	1
	2B	10M3K 10G-10FJX90-036 10G-10FJX 30.75 27	HYD HOSE X 30 3/4" LONG	1
		29805	5/8" TUBE BULKHEAD FITTING	1
		29807	7/8-14 BULKHEAD LOCKNUT	1
	2C	10M3K 10G-10FJX90-036 10G-10FJX 24.25 20.5	HYD HOSE X 24 1/4" LONG	1
		29805	5/8" TUBE BULKHEAD FITTING	1
		29807	7/8-14 BULKHEAD LOCKNUT	1
	2D	10M3K 10G-10FJX90-036 10G-10FJX 32.25 28.5	HYD HOSE X 32 1/4" LONG	1
		29813	5/8" TUBE X 3/4" NPT 90° ELBOW	1
	3.	**FLOW CONTROL VALVE “REG” PORT TO HYD VALVE INLET “IN”**		
		29822	1/2" TUBE X 3/4" NPT 90° ELBOW	1
	3	8M3K 8G-8FJX 8G-8FJX 62 59	HYD HOSE X 62" LONG	1
		29868	1/2" TUBE X 5/8" STD. THRD. O-RING 90°	1
	4.	**HYD VALVE PORT “A” TO BOTTOM MOTOR PORT**		
		29828	3/8" TUBE X 5/8" STD. THRD. O-RING 90°	1
	4	6M3K 6G-6FJX90S 6G-6FJX 23 19.25	HYD HOSE X 23" LONG	1
		22029	3/8" TUBE X 5/8" STD. THRD. O-RING STR	1
	5.	**TOP MOTOR PORT TO HYD VALVE PORT “B”**		
		22029	3/8" TUBE X 5/8" STD. THRD. O-RING STR	1
	5	6M3K 6G-6FJX90L 6G-6FJX90S 29.75 25.5	HYD HOSE X 29 3/4" LONG	1
		22029	3/8" TUBE X 5/8" STD. THRD. O-RING STR	1

©2026 by Crafco, Inc. All Rights Reserved

Figure 9-7 Hydraulic Schematic (PN 56690N) (continued)

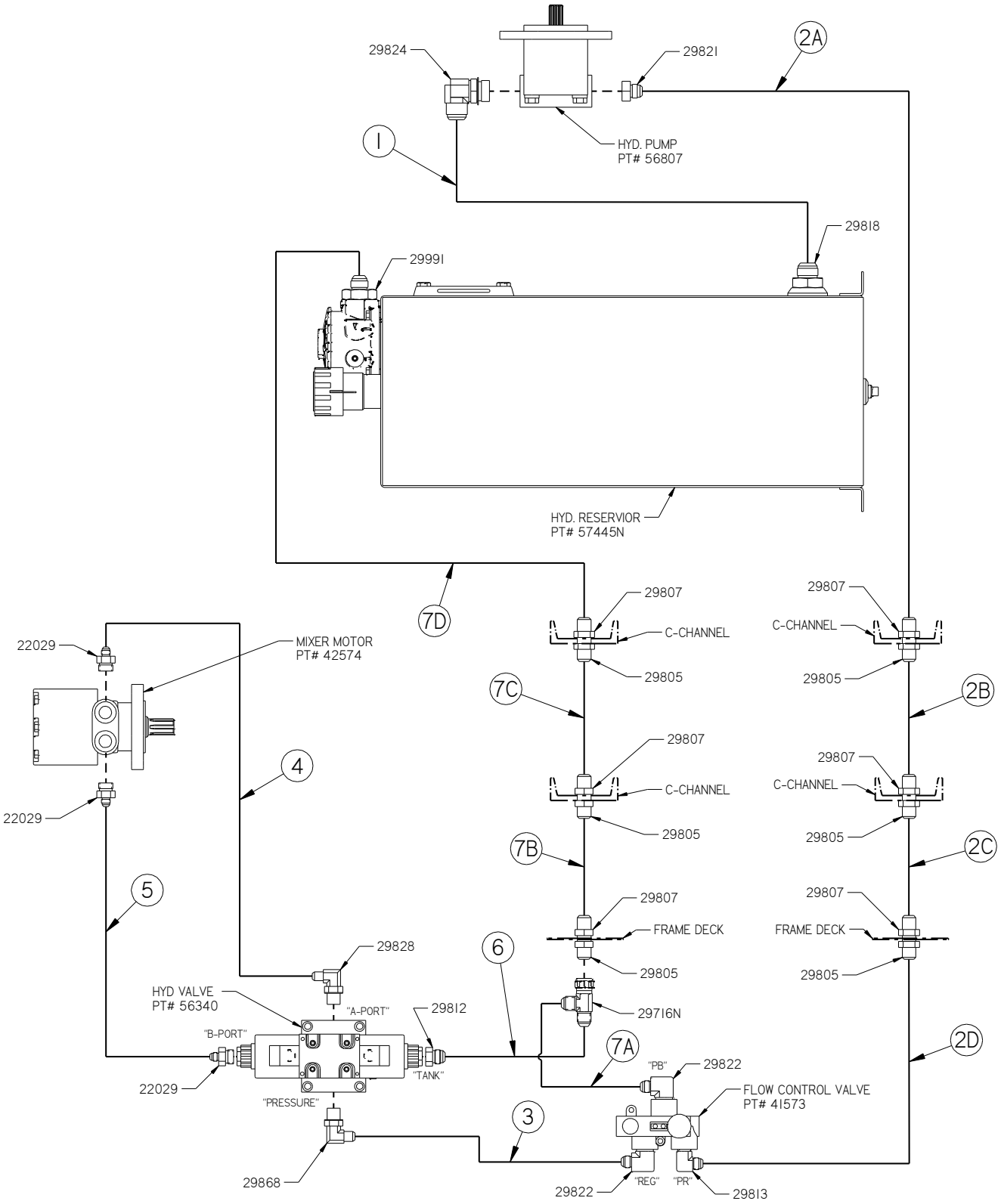

©2026 by Crafco, Inc. All Rights Reserved

Table 9-7 Hydraulic Parts List (continued)

FIG	ITEM	PART NO.	DESCRIPTION	QTY
Fig. 9.7	6.	HYDRAULIC VALVE "OUT" PORT TO “T” RETURN LINE		
		29812	5/8" TUBE X 5/8" STD. THRD. O-RING STR	1
	6	8M3K 8G-10FJX 8G-10FJX90S 28.75 25	HYD HOSE X 28 3/4" LONG	1
		29716N	5/8” TUBE X 5/8” TUBE SWIVEL NUT BRANCH TEE	1
	7.	FLOW CONTROL VALVE “PB” PORT TO HYD RESERVOIR RETURN PORT		
		29822	1/2" TUBE X 3/4" NPT 90° ELBOW	1
	7A	8M3K 8G-8FJX 8G-10FJX 32 29	HYD HOSE X 32" LONG	1
		29716N	5/8" TUBE X 5/8" TUBE SWIVEL NUT BRANCH TEE	1
		29805	5/8" TUBE BULKHEAD FITTING	1
		29807	7/8-14 BULKHEAD LOCKNUT	1
	7B	10M3K 10G-10FJX90-036 10G-10FJX 19.75 16	HYD HOSE X 19 3/4" LONG	1
		29805	5/8" TUBE BULKHEAD FITTING	1
		29807	7/8-14 BULKHEAD LOCKNUT	1
	7C	10M3K 10G-10FJX90L 10G-10FJX 29.75 26	HYD HOSE X 29 3/4" LONG	1
		29805	5/8" TUBE BULKHEAD FITTING	1
		29807	7/8-14 BULKHEAD LOCKNUT	1
	7D	10M3K 10G-12FJX90S 10G-10FJX 42.5 38	HYD HOSE X 42 1/2” LONG	1
		29991	3/4" TUBE X 1 1/4" STD. THRD. O-RING STR	1

©2026 by Crafco, Inc. All Rights Reserved

9.6 Hydraulic Valve Parts List

Figure 9-8 Hydraulic Valve

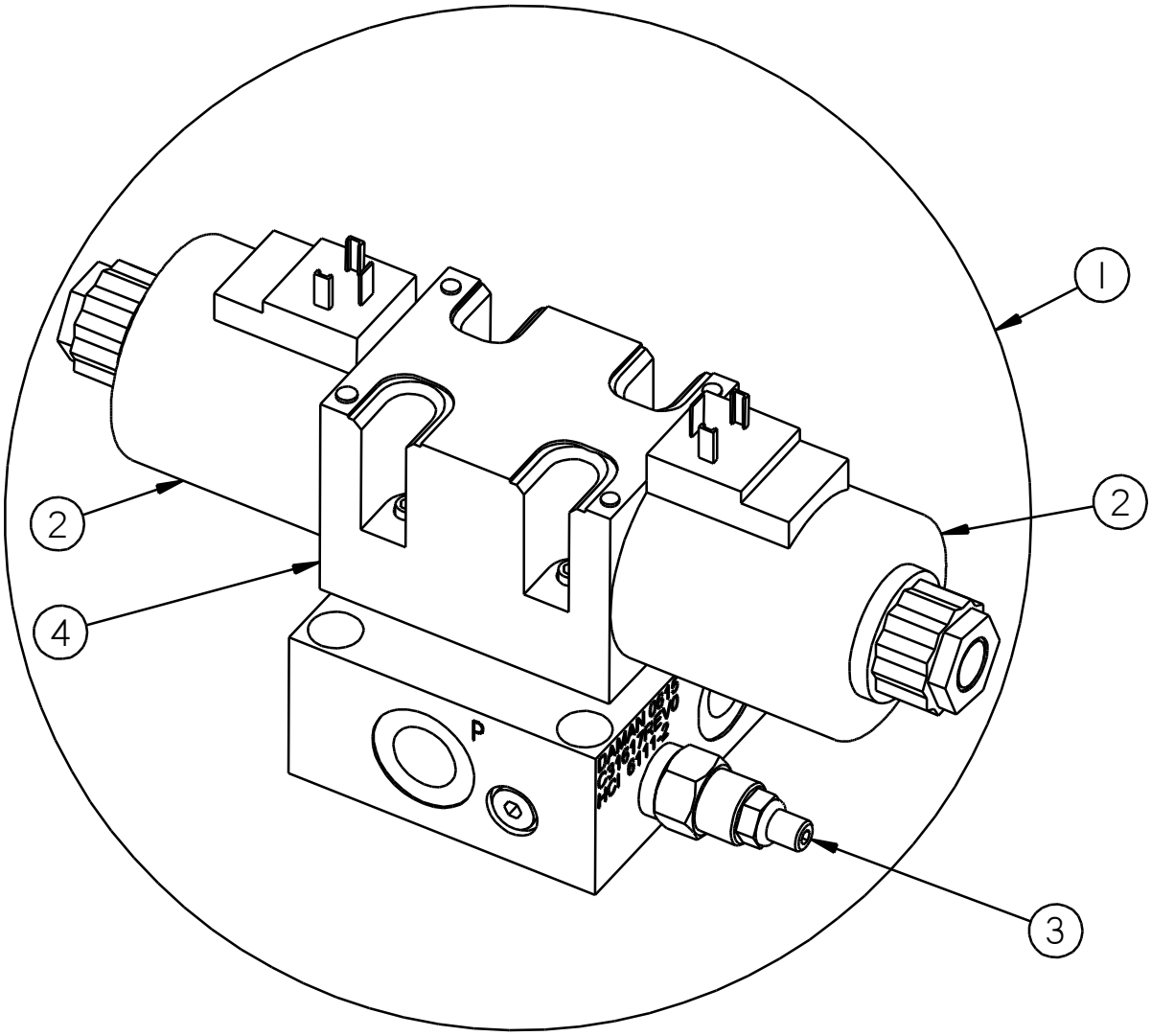

Table 9-8 Hydraulic Valve Parts List

FIG.	ITEM	PART NO.	DESCRIPTION	QTY
Fig. 9.8	1	56340	HYDRAULIC VALVE ASSEMBLY	1
	2	56481	COIL, DIRECTIONAL VALVE	2
	3	44812	PRESSURE RELIEF VALVE	1
	4	56483	DIRECTIONAL VALVE BLOCK	1

©2026 by Crafco, Inc. All Rights Reserved

Chapter 9 Illustrated Parts List

9.7 Hitch Parts List

Figure 9-9 Hitch

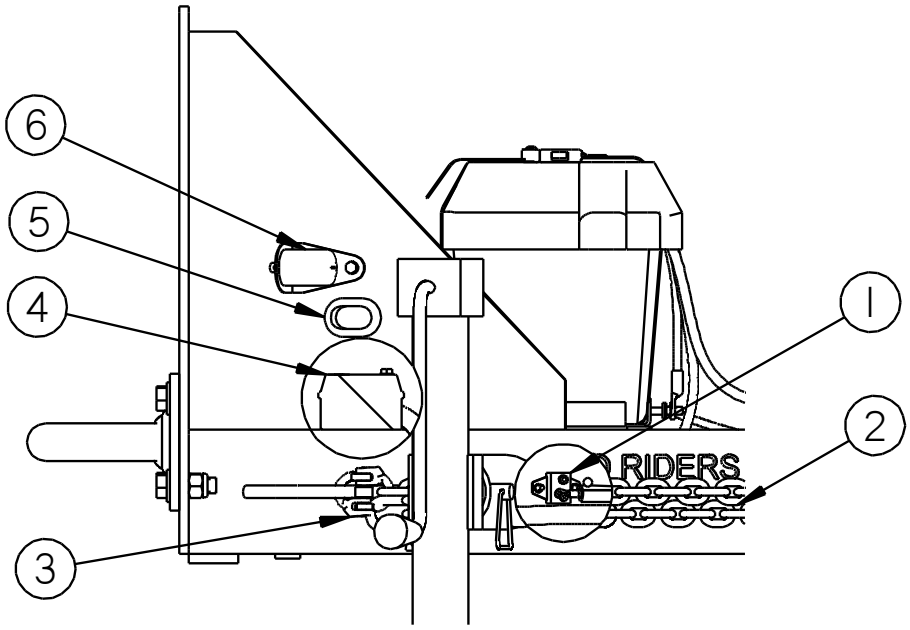

Table 9-9 Hitch Parts List

FIG.	ITEM	PART NO.	DESCRIPTION	QTY
Fig. 9.9	1	31512	CIRCUIT BREAKER	1
	NS	52310	WIRE ASSY, CIR. BRKR. TO BATT	1
	2	20130	48” X 3/8” CHAIN	OPT
	3	20132	SHACKLE CONNECTING LINK	2
	4	38020N	JUNCTION BOX, TRAILER LIGHTING	1
	5	43688	GROMMET, 1.5”	1
	6	23117	BREAKAWAY SWITCH	1
	NS	20144	3/8” CHAIN SHACKLE W/ SCREW PIN	OPT
	NS	26199	3/8 CHAIN HOOK W/ SAFETY LATCH	OPT
	NS	20014	3” PINTLE HITCH	OPT
	NS	20016	2-1/2” PINTLE HITCH	OPT
	NS	20120	18” HITCH EXTENSION	OPT
	NS	20140	28” HITCH EXTENSION	OPT
	NS	20150	39” HITCH EXTENSION	OPT
	NS	20129	72” X 3/8” CHAIN (FOR HITCH EXTENSIONS)	OPT
	NS	51221	BREAKAWAY SWITCH EXTENSION SLING	OPT

©2026 by Crafco, Inc. All Rights Reserved

9.8 Diesel Fuel Line Schematic

Figure 9-10 Diesel Fuel Line Schematic (P/N 26599)

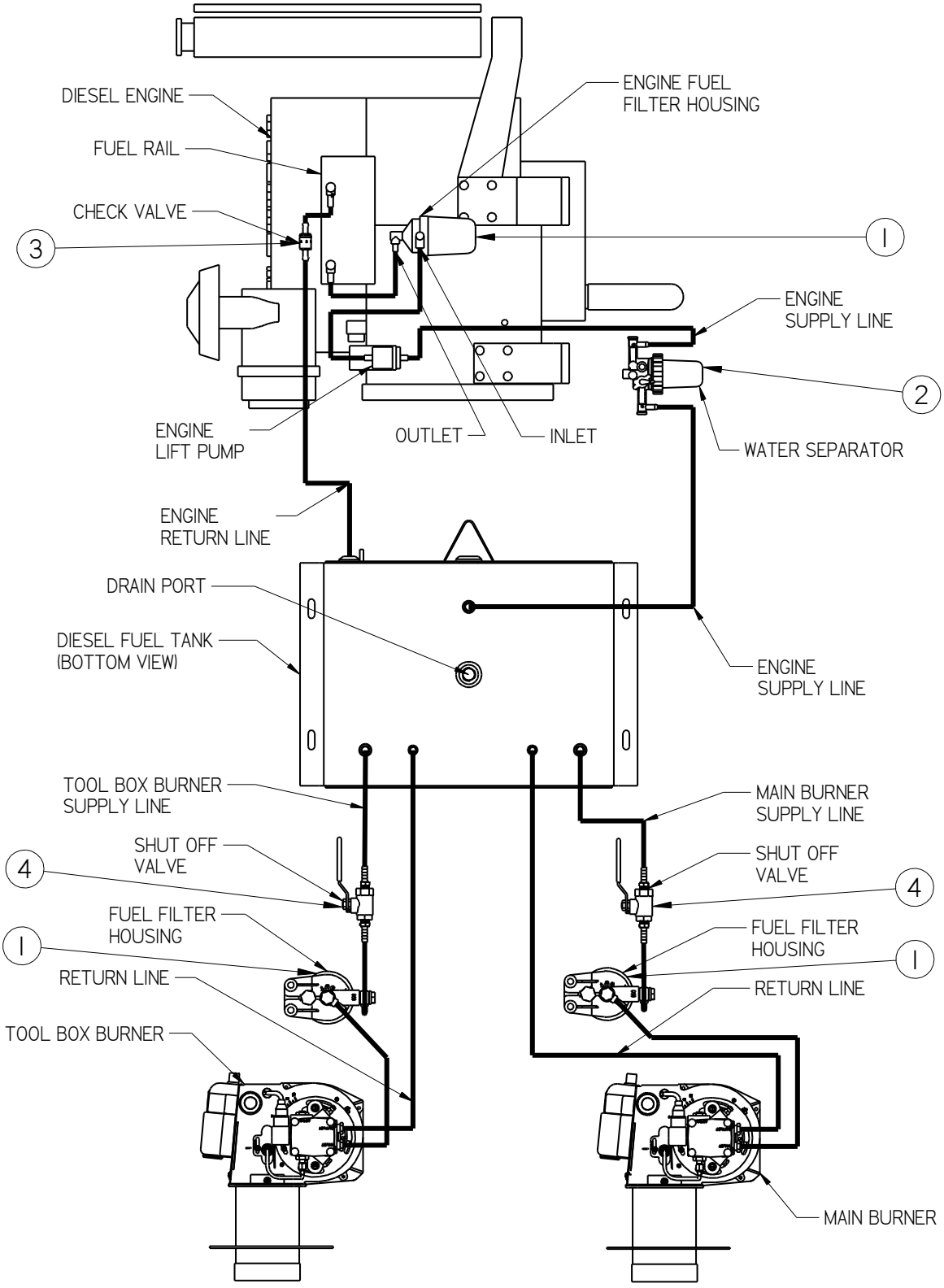

©2026 by Crafco, Inc. All Rights Reserved

Chapter 9 Illustrated Parts List

Table 9-10 Diesel Fuel Line Schematic Parts List

FIG.	ITEM	PART NO.	DESCRIPTION	QTY
Fig. 9.10	1	41867	FUEL FILTER ELEMENT	3
	2	47150	WATER SEPARATOR	1
	3	47149N	VALVE, CHECK, INLINE 5/16 BARB	1
	4	29195	BRONZE BALL VALVE, 1/4”	2

©2026 by Crafco, Inc. All Rights Reserved

9.9 Main Diesel Burner Parts List (P/N 46380)

Figure 9-11 Main Diesel Burner (P/N 46380)

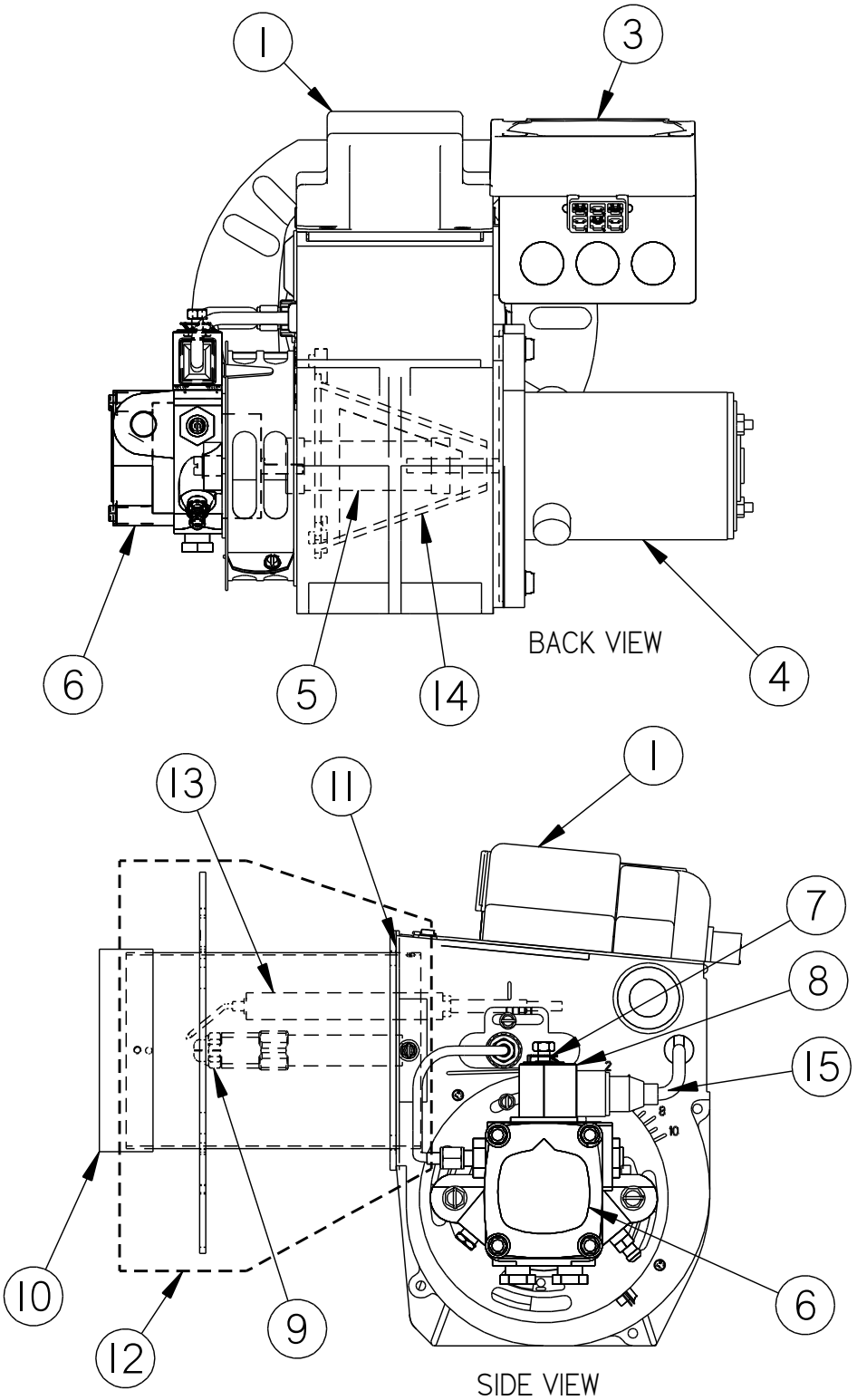

©2026 by Crafco, Inc. All Rights Reserved

Table 9-11 Main Diesel Burner Parts List (P/N 46380)

FIG.	ITEM	PART NO.	DESCRIPTION	QTY
Fig. 9.11	1	41949	IGNITION TRANSFORMER	1
	2	41870	CAD EYE (NOT SHOWN)	1
	3	42335	DC CONTROLLER	1
	4	41890	BLOWER MOTOR	1
	5	41970	COUPLING, FUEL PUMP	1
	6	41892	PUMP, FUEL	1
	7	41932	VALVE STEM, FUEL SOLENOID	1
	8	41933	COIL, FUEL SOLENOID	1
	9	56646N	BURNER NOZZLE, (2.5) *NOT INCLUDED W/ 46380	1
	10	41953N	FLAME RETAINER, F22	1
	11	41964N	GASKET, AIR TUBE TO HOUSING	1
	12	46381N	AIR TUBE W/ HEAD & ELECTRODE MOUNT	1
	13	41993	ELECTRODE ASSY (COMES WITH 2)	1
	14	41966N	AIR GUIDE, BURNER	1
	15	41894N	CORD SET	1

9.10 Toolbox Diesel Burner Parts List (P/N 57485N)

Figure 9-12 Toolbox Diesel Burner (P/N 57485N)

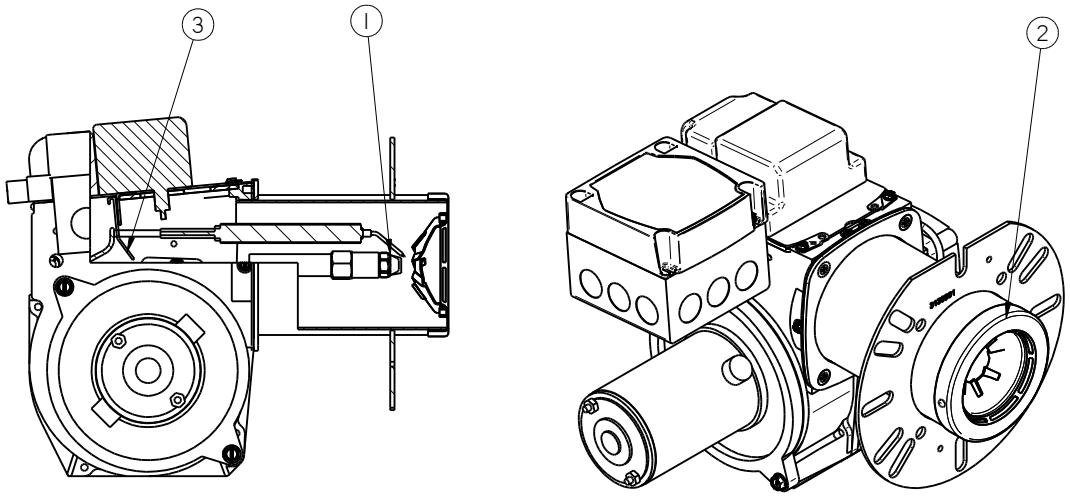

Table 9-12 Toolbox Diesel Burner (P/N 57485N)

FIG.	ITEM	PART NO.	DESCRIPTION	QTY
Fig. 9.12	1	32403	BURNER NOZZLE (0.5)	1
	2	32401	HEAD DIFFUSER, SPECIAL FOR TOOLBOX	1
	3	32400	INTERNAL BAFFLE PLATE, SPECIAL FOR T.B.	1

©2026 by Crafco, Inc. All Rights Reserved

9.11 Control Box Parts List (P/N 47265N)

Figure 9-13 Control Box Parts List (P/N 47265N)

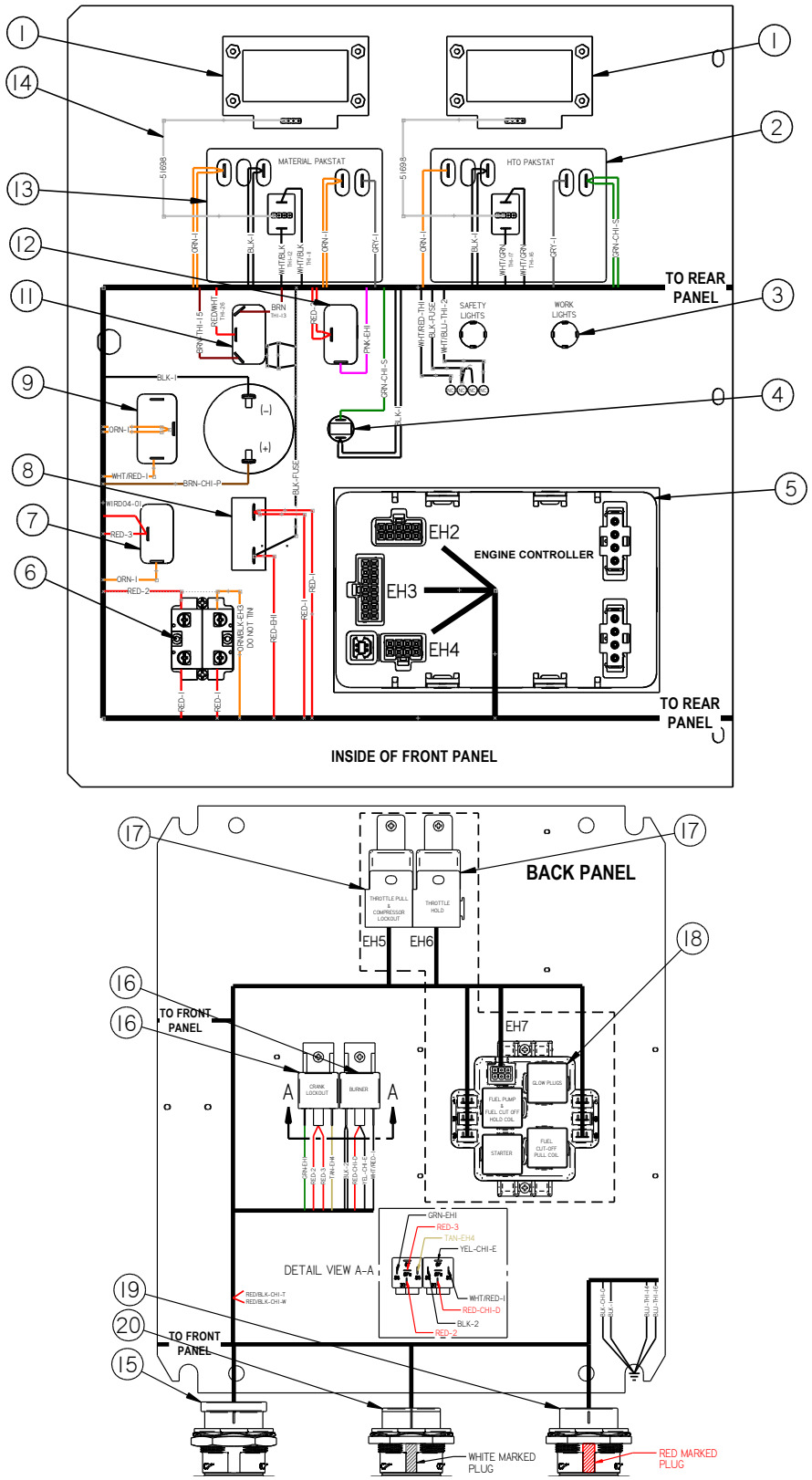

©2026 by Crafco, Inc. All Rights Reserved

Table 9-13 Control Box Parts List (P/N 47265N)

FIG.	ITEM	PART NO.	DESCRIPTION	QTY
Fig. 9.13	1	50251	READOUT, LCD	2
	2	43391	TEMP CONTROLLER (P64A0918-903)	1
	3	24269	PLUG 1/2”	2
	4	51651	LIGHT, PILOT 12VDC	1
	5	38090N	ENGINE CONTROLLER	1
	6	46239	SWITCH, ON/OFF W/ KEY	1
	6A	51852	CONTACT BLOCK, N.O.	2
	7	50719	SWITCH, TOGGLE SPST	1
	8	51665	CIRCUIT BREAKER	1
	9	52338	SWITCH, TOGGLE, SPDT ON-(ON)	1
	10	46494	ALARM, PIEZO	1
	11	56351	SWITCH, TOGGLE, 3 POLE	1
	12	50719	SWITCH, TOGGLE SPST	1
	13	57863	TEMP CONTROLLER 200-450 DEGREE	1
	14	51698	CABLE, 5” RIBBON	2
	15	38100N	HARNESS, ENGINE PIGTAIL, INCL. RELAYS	1
	16	51673	RELAY, 12V, SPDT	2
	17	38101S	RELAY, MECH ENGINE HARNESS, 40/60A	2
	18	38102S	RELAY, MECH ENGINE HARN, RELAY PACK	4
	19	38120N	HARNESS, TANK PIGTAIL	1
	20	38110N	HARNESS, CHASSIS PIGTAIL	1
	NS	50593	CONTROL KNOB	2
	NS	25424N	DECAL, MODULAR CONTROL BOX PATCHER	1
	NS	38050	ENCLOSURE, CONTROL BOX, MODULAR	1

©2026 by Crafco, Inc. All Rights Reserved

9.12 Electrical Wiring Harness Parts List

Figure 9-14 Electrical Wiring Harness Parts List

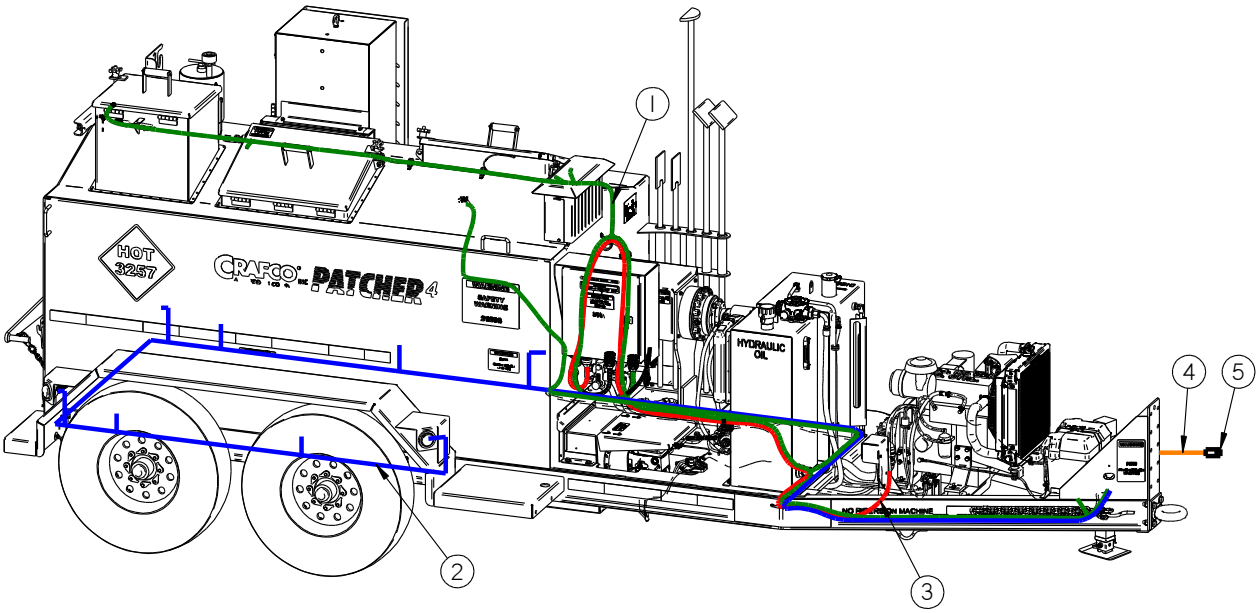

Table 9-14 Electrical Wiring Harness Parts List

FIG.	ITEM	PART NO.	DESCRIPTION	QTY
Fig. 9.14	1	38235N	HARNESS, MACHINE, PTCHR 4 (SHOWN IN GREEN)	1
	2	38504N	TRAILER LIGHT HARNESS (SHOWN IN BLUE)	1
	3	45975N	ENGINE EXTENSION HARNESS (SHOWN IN RED)	1
	4A	32418N	TRUCK PIGTAIL, NO EXT (CABLE ONLY)	OPT
	4B	32419N	TRUCK PIGTAIL, 18” EXT (CABLE ONLY)	OPT
	4C	32420N	TRUCK PIGTAIL, 28” EXT (CABLE ONLY)	OPT
	4D	32431N	TRUCK PIGTAIL, 39” EXT (CABLE ONLY)	OPT
	5A	24227	7 PIN ROUND RV CONNECTOR, BLADE TRML	OPT
	5B	24183	7 PIN ROUND CONNECTOR, ROUND TRMLS	OPT
	5C	24074	6 PIN ROUND CONNECTOR	OPT
	4+5	23950N	5 PIN FLAT CNCTR, WITH COILED PIGTAIL	OPT

©2026 by Crafco, Inc. All Rights Reserved

This page is left blank on purpose.

©2026 by Crafco, Inc. All Rights Reserved

9.13 Electrical Schematic Parts List

Figure 9-15 Electrical schematic parts list (P/N 26582P4)

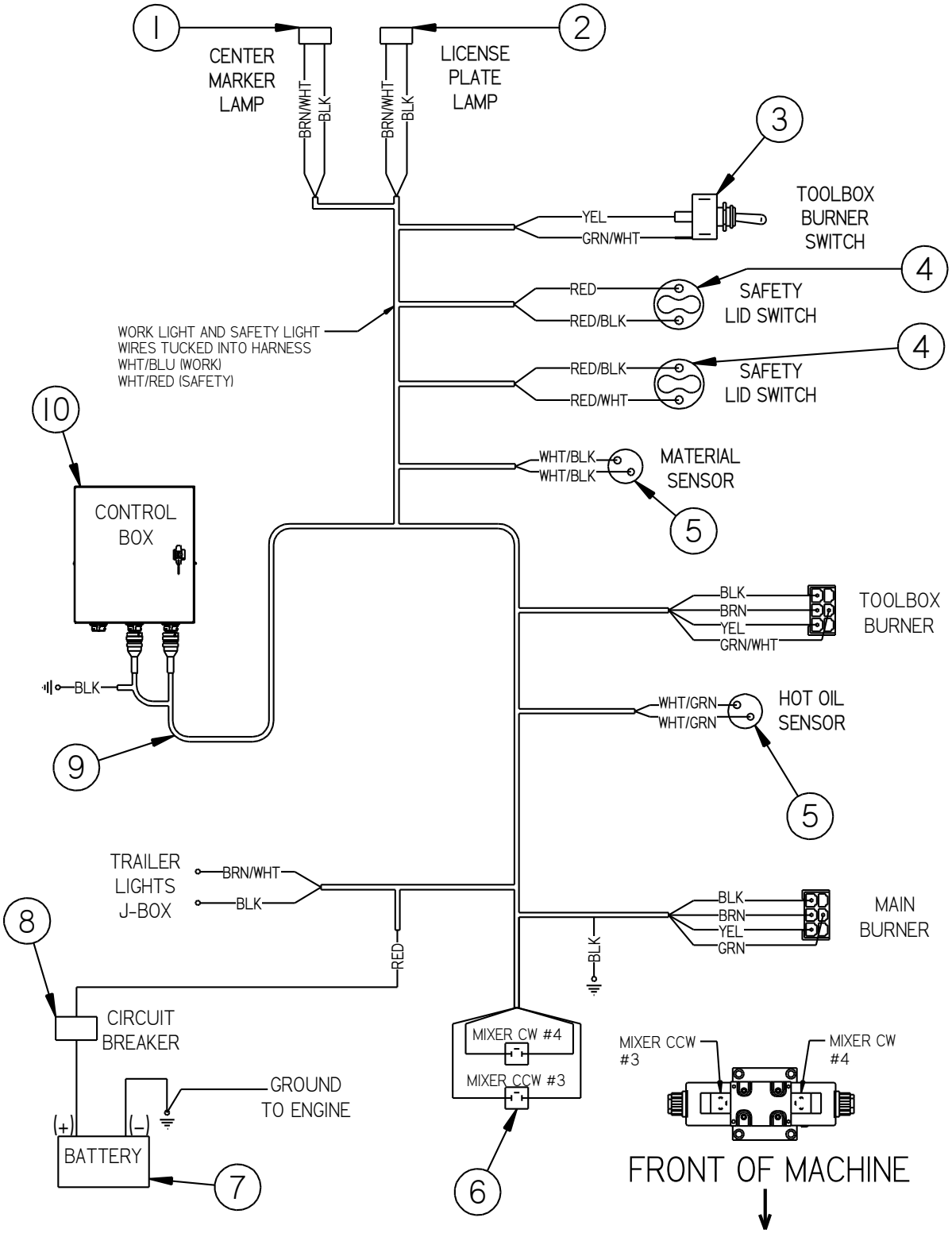

©2026 by Crafco, Inc. All Rights Reserved

Chapter 9 Illustrated Parts List

Table 9-15 Electrical Schematic Parts List

FIG.	ITEM	PART NO.	DESCRIPTION	QTY
Fig. 9.15	1	32371	LED CENTER MARKER LAMP	1
	2	44797	LICENSE PLATE LIGHT	1
	3	39566	SINGLE POLE SWITCH	1
	4	39608	AUTOSTOP LID SWITCH	1
	5	43465	RTD SENSOR	2
	6	45376	DIN PLUG, W/ CABLE	2
	7	24000	BATTERY, 12-VOLT	1
	8	31512	CIRCUIT BREAKER	1
	9	38235N	HARNESS, MACHINE, PATCHER 4	1
	10	47265N	CONTROL BOX, PATCHER, MODULAR	1

©2026 by Crafco, Inc. All Rights Reserved

9.14 Heated Toolbox Parts List (P/N 57450N)

Figure 9-16 Heated Toolbox Parts List (P/N 57450N)

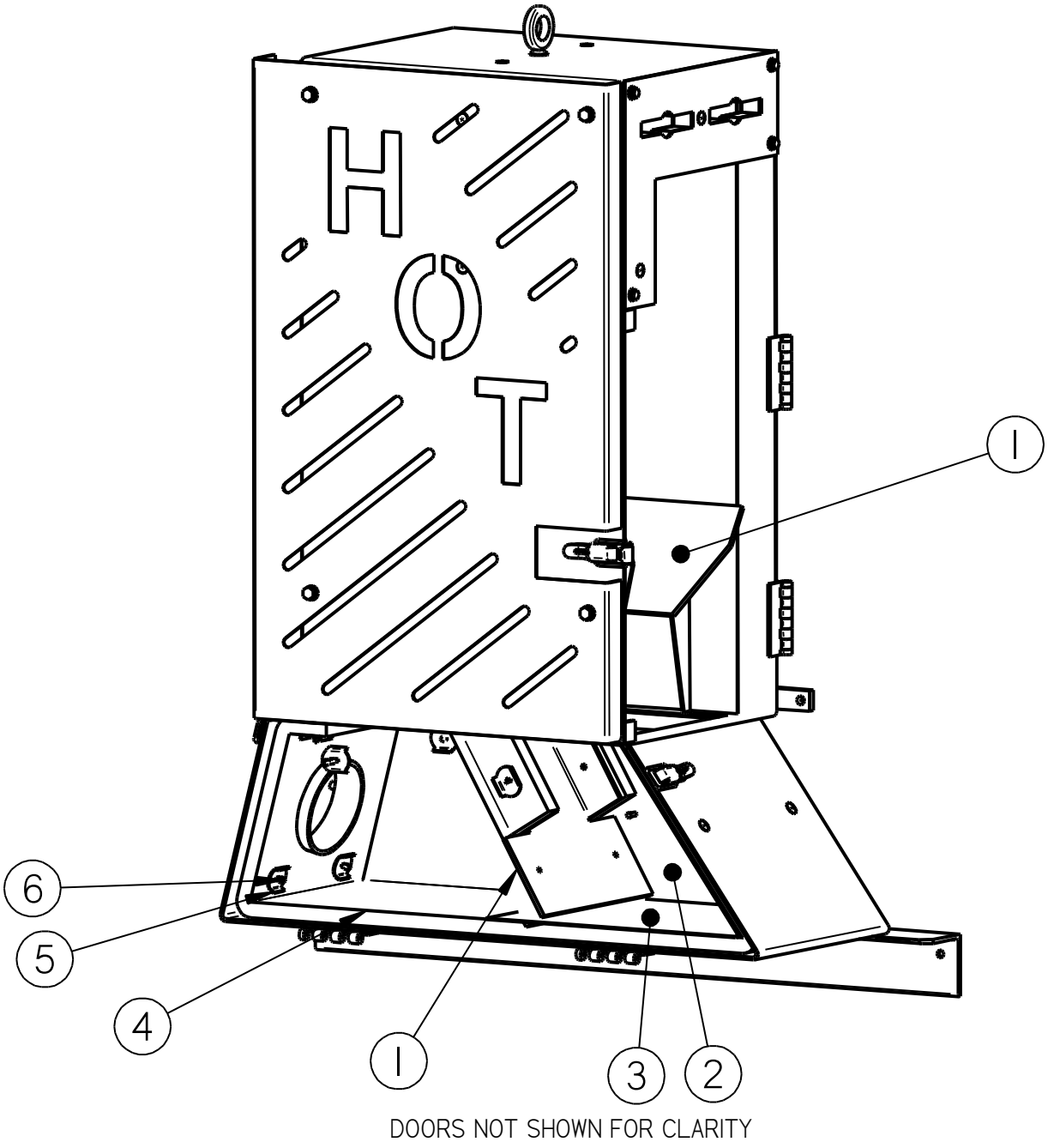

©2026 by Crafco, Inc. All Rights Reserved

Table 9-16 Heated Toolbox Parts List (P/N 57450N)

FIG.	ITEM	PART NO.	DESCRIPTION	QTY
Fig. 9.16	1	57475N	FUNNEL AND CHUTE ASSY, INSULATED	1
	2	57463N	INNER SIDE PANEL, SS, (1 IS ATTACHED TO DOOR)	2
	3	57476N	INNER BOTTOM/FRONT PANEL, SS	1
	4	57474N	INSULATION, LOWER BURNER BOX AREA	1
	5	43107	INCONEL WASHER (HOLDS INSULATION IN PLACE)	6
	6	43106	INCONEL WELD STUD	6
	NS	57479N	INSULATION, LOWER DOOR	1
	NS	28995	RIVET, 3/16” X 1.81” (FOR STAINLESS PANELS)	6

©2026 by Crafco, Inc. All Rights Reserved

9.15 Optional Material Chute Parts List (P/N 56895N)

Figure 9-17 Optional Material Chute (P/N 56895N)

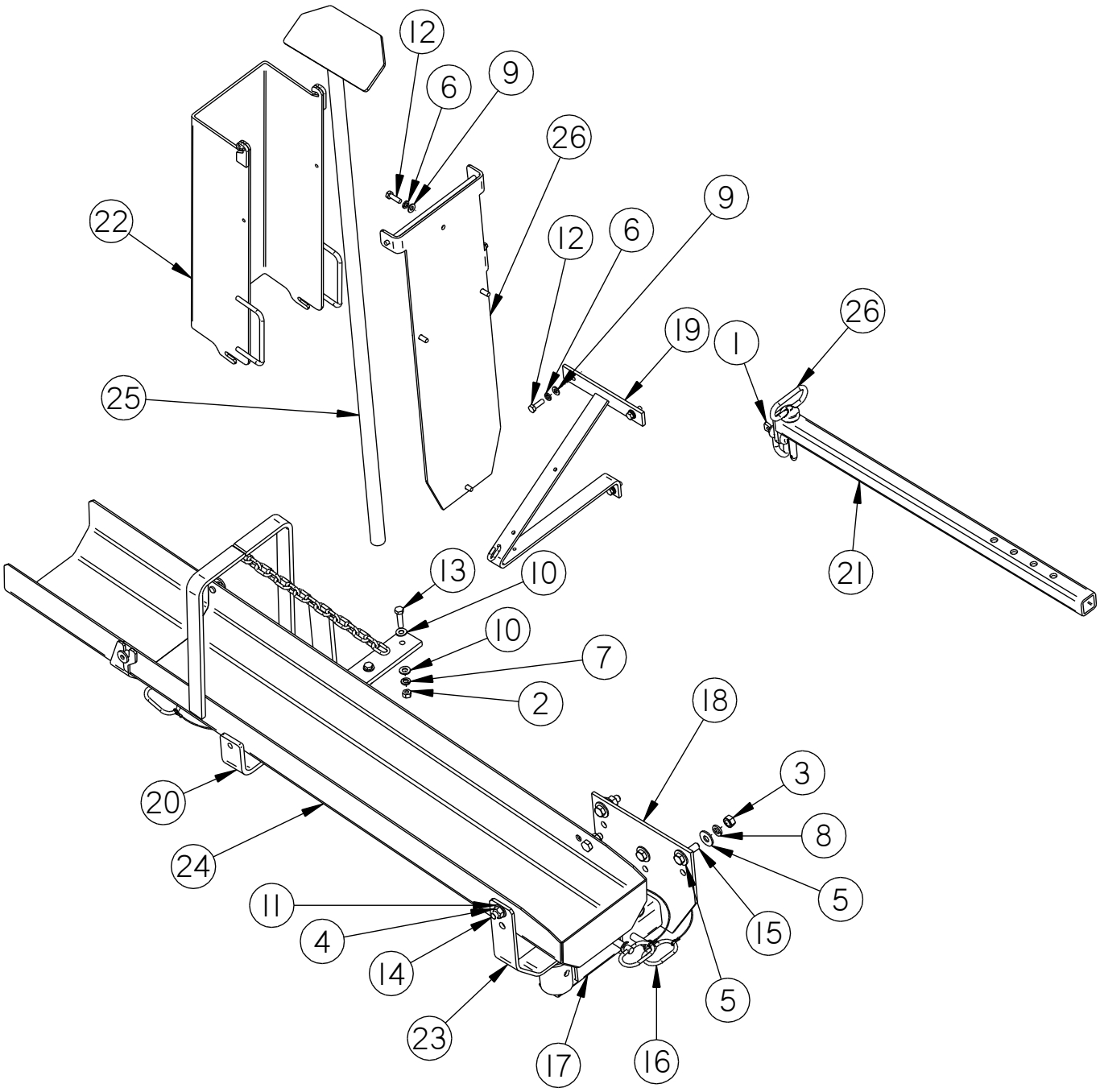

©2026 by Crafco, Inc. All Rights Reserved

Table 9-17 Optional Material Chute Parts List (56895N)

FIG.	ITEM	PART NO.	DESCRIPTION	QTY
Fig. 9.17	1	20144	SHACKLE, 3/8 CHAIN WITH SCREW PIN	1
	2	28502	3/8”-16 HEX NUT	2
	3	28504	1/2”-13 HEX NUT	3
	4	28540	1/2”-13 UPSET LOCK NUT	2
	5	28636	1/2' FLAT WASHER	6
	6	28646	5/16” LOCK WASHER	6
	7	28647	3/8” LOCK WASHER	2
	8	28649	1/2" LOCK WASHER	3
	9	28671	5/16” FLAT WASHER	6
	10	28672	3/8” FLAT WASHER	4
	11	28674	1/2" SAE FLAT WASHER	2
	12	28716	5/16”-18 X 1” HEX HEAD BOLT	6
	13	28733	3/8”-16 X 1-1/2” HEX HEAD BOLT	2
	14	28761	1/2”-13 X 1-1/2” HEX HEAD BOLT	2
	15	28763	1/2"-13 X 1-3/4” HEX HEAD BOLT	3
	16	44462	HITCH PIN	2
	17	56812	EXTENDED MOUNTING BASE PLATE ASSEMBLY	1
	18	56822	BUMPER MOUNTING TROUGH SUPPORT ASSY.	1
	19	56864	TROUGH, CHAIN BRACKET ASSEMBLY	1
	20	56889N	CHUTE SUPPORT ASSEMBLY	1
	21	56899N	SIDE DRAG BOX CHAIN ATTACHMENT ARM	1
	22	57225N	PATCHER SPOUT EXTENSION ASSEMBLY	1
	23	58620N	BRACKET, CHUTE SUPPORT ASSEMBLY	1
	24	58645N	NON – HEATED CHUTE WELD ASSEMBLY	1
	25	58664N	TROUGH SCOOP ASSEMBLY, WIDE	1
	26	58665N	STORAGE BRACKET, CHUTE/SPOUT EXTENSION	1
	27	60878N	LOOP GRIP CLEVIS PIN	1

©2026 by Crafco, Inc. All Rights Reserved

9.16 Optional Heated Chute Parts List (P/N 56890N)

Figure 9-18 Optional Heated Chute (P/N 56890N)

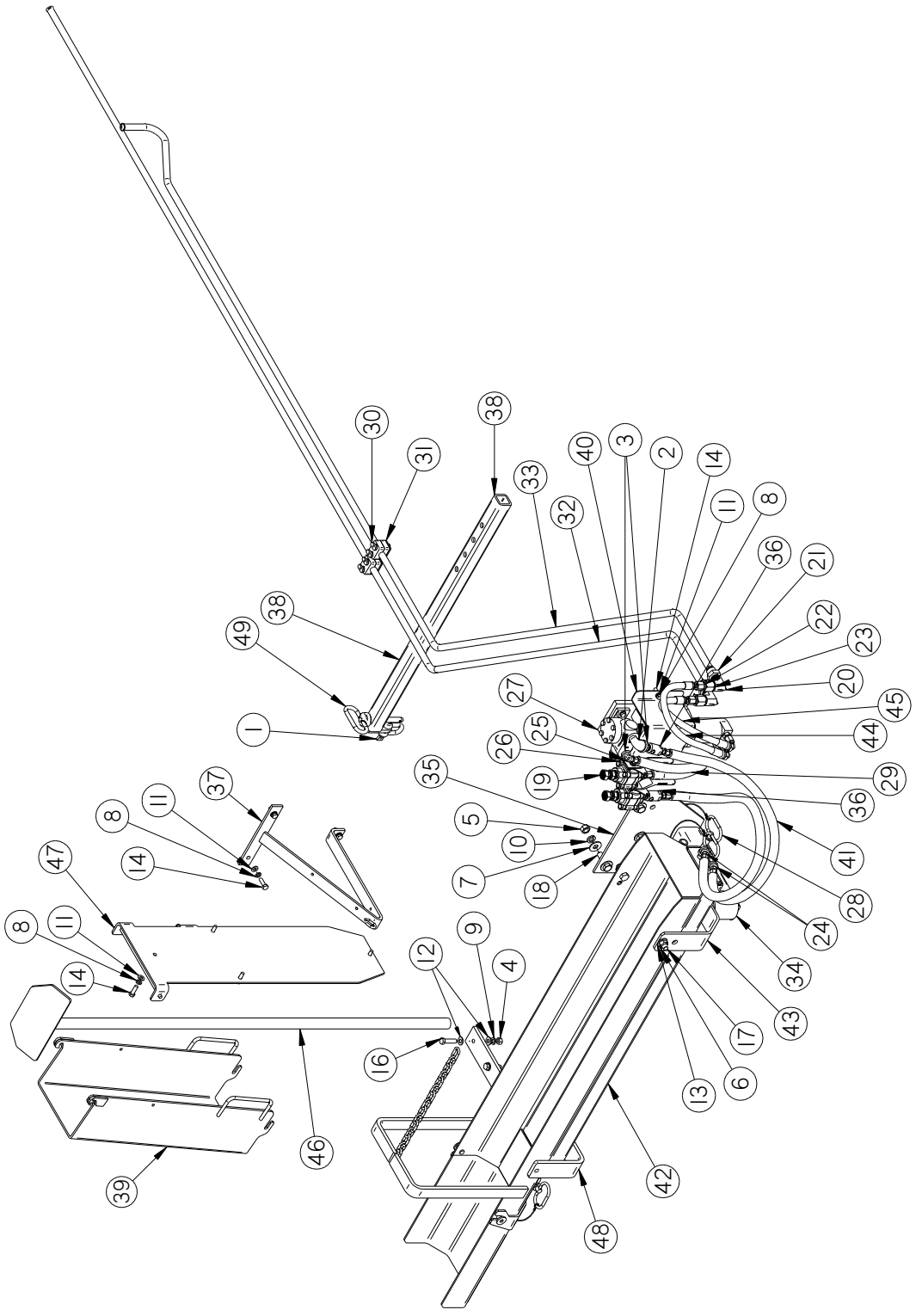

©2026 by Crafco, Inc. All Rights Reserved

Table 9-18 Optional Heated Chute Parts List (56890N)

FIG.	ITEM	PART NO.	DESCRIPTION	QTY
Fig. 9.18	1	20144	SHACKLE, 3/8” CHAIN WITH SCREW PIN	1
	2	28238	1/2” STREET ELBOW, GALVANIZED	1
	3	28344	1/2" X 1/4" REDUCER BUSHING	4
	4	28502	3/8”-16 HEX NUT	2
	5	28504	1/2"-13 HEX NUT	3
	6	28540	1/2"-13 UPSET LOCK NUT	2
	7	28636	1/2” FLAT WASHER	6
	8	28646	5/16” LOCK WASHER	10
	9	28647	3/8” LOCK WASHER	2
	10	28649	1/2” LOCK WASHER	3
	11	28671	5/16” FLAT WASHER	8
	12	28672	3/8” FLAT WASHER	4
	13	28674	1/2" SAE FLAT WASHER	2
	14	28716	5/16”-18 X 1” HEX HEAD BOLT	8
	15	28717	5/16”-18 X 1-1/4” HEX HEAD BOLT (NOT SHOWN)	2
	16	28733	3/8”-16 X 1-1/2” HEX HEAD BOLT	2
	17	28761	1/2"-13 X 1-1/2” HEX HEAD BOLT	2
	18	28763	1/2"-13 X 1-3/4” BOLT	3
	19	29410N	ADAPTER, 1/2” FJIC X 1/2" MNPT	2
	20	29806	ELBOW, 5/8” BULKHEAD 90°	2
	21	29807	BULHEAD LOCKNUT 7/8”-14	2
	22	29809	REDUCER, 5/8” X 3/8” TUBE	2
	23	29810	NUT, 5/8” TUBE	2
	24	29836	MALE CONNECTOR, 4MP X 4MJ	5
	25	29870	1/4" MPT X 7/16” JIC 90° ELBOW	1
	26	41499	1/2" HOT OIL BALL VALVE	2
	27	41696	PUMP AND MOTOR ASSEMBLY, HOT OIL	1
	28	44462	HITCH PIN	2
	29	44758	1/4” X 18” TEFLON HOSE	1
	30	46464	NUT, TUBE CLAMP	4
	31	46516	CLAMP, HYDRAULIC TUBE	2
	32	56693N	HYDRAULIC TUBE, HEATED CHUTE RETURN P4	1

©2026 by Crafco, Inc. All Rights Reserved

Chapter 9 Illustrated Parts List

Figure 9-19 Optional Heated Chute Parts List (continued)

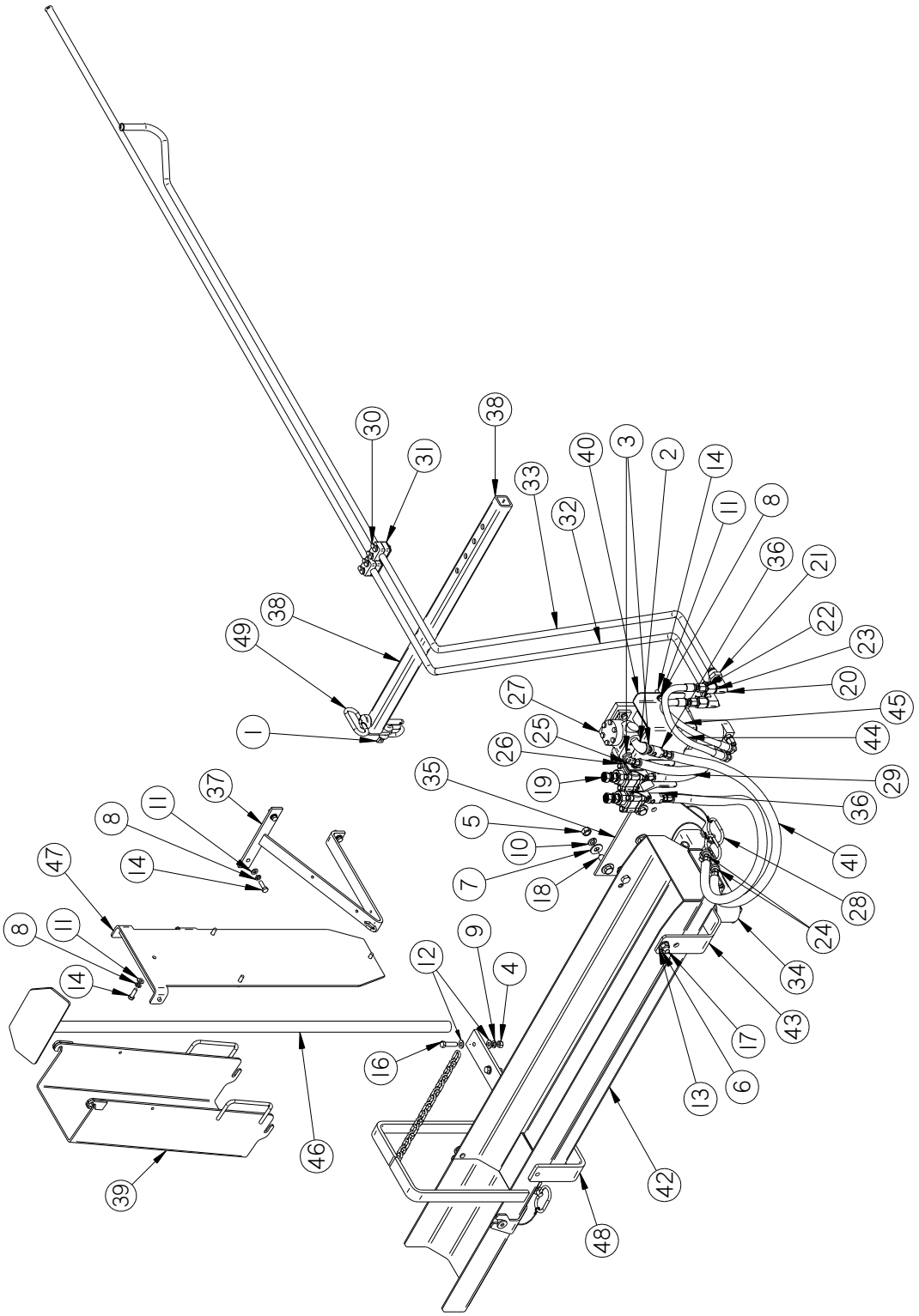

©2026 by Crafco, Inc. All Rights Reserved

Table 9-19 Optional Heated Chute Parts List (continued)

FIG.	ITEM	PART NO.	DESCRIPTION	QTY
Fig. 9.19	33	56694N	HYDRAULIC TUBE, HEATED CHUTE PRESSURE P4	1
	34	56812	EXTENDED MOUNTING BASE PLATE ASSEMBLY	1
	35	56822	BUMPER MOUNTING, MATERIAL TROUGH ASSY	1
	36	56832	600° 1/4" SWIVEL FITTING	2
	37	56864	TROUGH – CHAIN BRACKET ASSEMBLY	1
	38	56899N	SIDE DRAG BOX CHAIN ATTACHMENT ARM	1
	39	57225N	PATCHER SPOUT EXTENSION ASSEMBLY	1
	40	57782	GUARD, HOT OIL – HEATED CHUTE	1
	41	57797	¼” X 31” TEFLON HOSE	2
	42	58610N	HEATED CHUTE ASSEMBLY	1
	43	58620N	BRACKET, CHUTE SUPPORT ASSEMBLY	1
	44	58643N	HOSE, 6M3K 6G-6FJX 6G-6FJX90S 20.25 17.0	1
	45	58644N	HOSE, 6M3K 6G-6FJX 6G-6FJX90S 18.25 15.0	1
	46	58664N	TROUGH SCOOP ASSEMBLY, WIDE	1
	47	58665N	STORAGE BRACKET, CHUTE/SPOUT EXTENSION	1
	48	58693N	CHUTE STORAGE BRACKET ASSEMBLY	1
	49	60878N	LOOP GRIP CLEVIS PIN	1

©2026 by Crafco, Inc. All Rights Reserved

9.17 Hydraulic Schematic for Optional Heated Chute

Figure 9-20 Hydraulic Schematic for Optional Heated Chute

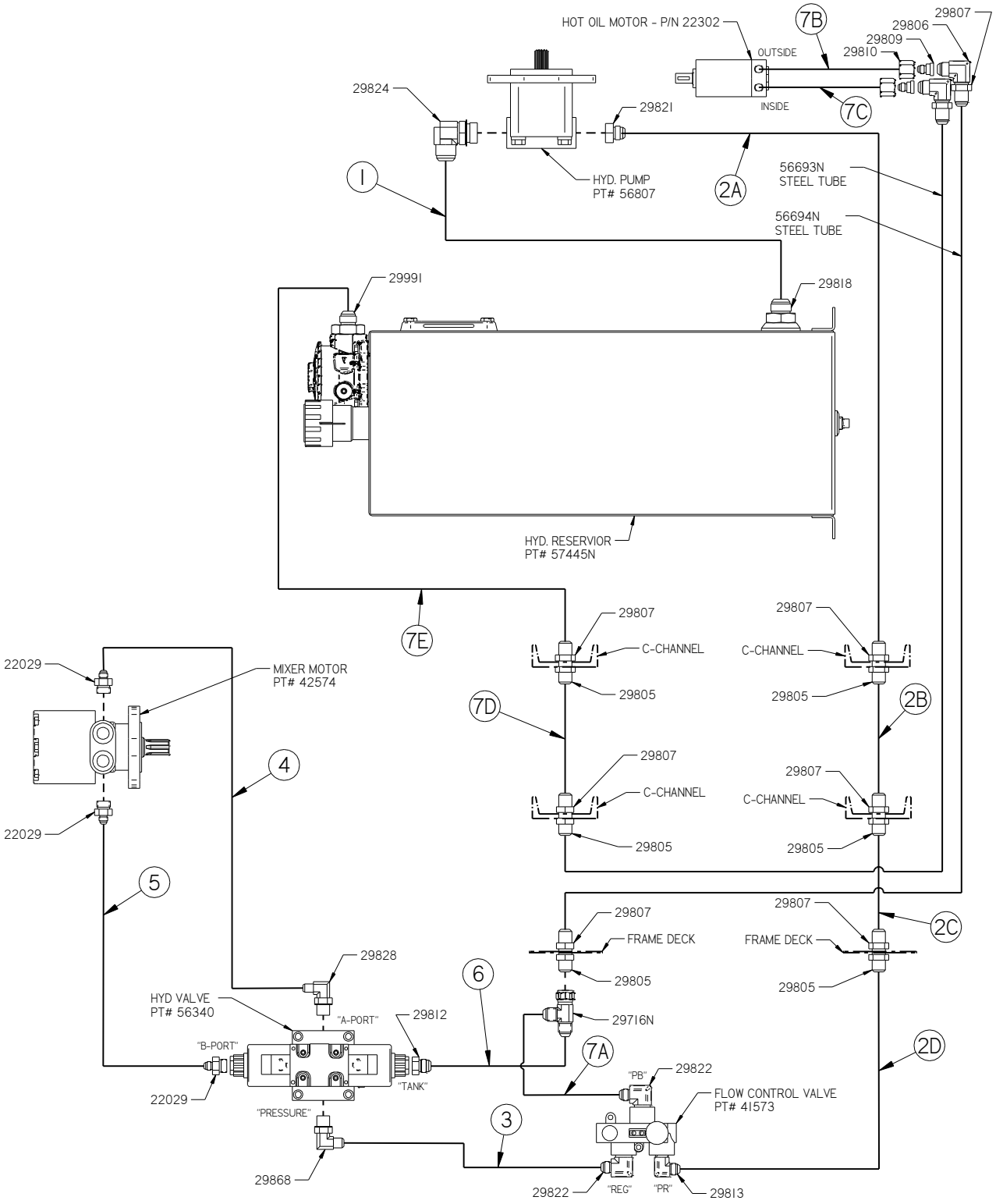

©2026 by Crafco, Inc. All Rights Reserved

Table 9-20 Hydraulic Schematic for Optional Heated Chute Parts List

FIG	ITEM	PART NO.	DESCRIPTION	QTY
Fig.9.20	**1.**	**HYDRAULIC RESERVOIR TO HYDRAULIC PUMP (SUCTION)**		
		29818	1” TUBE X 1-1/4" STD THRD O-RING STR	1
	1	16G4H 16G-16FJX90S 16G-16FJX 32.5 37	32.5” SUCTION HOSE	1
		29824	1" TUBE X 1" STD THRD. O-RING 90° ELBW	1
	2.	**HYDRAULIC PUMP TO FLOW CONTROL VALVE “PR” PORT**		
		29821	5/8" TUBE X 3/4" STD. THRD. O-RING STR	1
	2A	10M3K 10G-10FJX90-036 10G-10FJX 25.5 22	HYD HOSE X 25 1/2" LONG	1
		29805	5/8" TUBE BULKHEAD FITTING	1
		29807	7/8-14 BULKHEAD LOCKNUT	1
	2B	10M3K 10G-10FJX90-036 10G-10FJX 30.75 27	HYD HOSE X 30 3/4" LONG	1
		29805	5/8" TUBE BULKHEAD FITTING	1
		29807	7/8-14 BULKHEAD LOCKNUT	1
	2C	10M3K 10G-10FJX90-036 10G-10FJX 24.25 20.5	HYD HOSE X 24 1/4" LONG	1
		29805	5/8" TUBE BULKHEAD FITTING	1
		29807	7/8-14 BULKHEAD LOCKNUT	1
	2D	10M3K 10G-10FJX90-036 10G-10FJX 32.25 28.5	HYD HOSE X 32 1/4" LONG	1
		29813	5/8" TUBE X 3/4" NPT 90° ELBOW	1
	3.	**FLOW CONTROL VALVE “REG” PORT TO HYD VALVE INLET “IN”**		
		29822	1/2" TUBE X 3/4" NPT 90° ELBOW	1
	3	8M3K 8G-8FJX 8G-8FJX 62 59	HYD HOSE X 62" LONG	1
		29868	1/2" TUBE X 5/8" STD. THRD. O-RING 90°	1
	4.	**HYD VALVE PORT “A” TO BOTTOM MOTOR PORT**		
		29828	3/8" TUBE X 5/8" STD. THRD. O-RING 90°	1
	4	6M3K 6G-6FJX90S 6G-6FJX 23 19.25	HYD HOSE X 23" LONG	1
		22029	3/8" TUBE X 5/8" STD. THRD. O-RING STR	1
	5.	**TOP MOTOR PORT TO HYD VALVE PORT “B”**		
		22029	3/8" TUBE X 5/8" STD. THRD. O-RING STR	1
	5	6M3K 6G-6FJX90L 6G-6FJX90S 29.75 25.5	HYD HOSE X 29 3/4" LONG	1
		22029	3/8" TUBE X 5/8" STD. THRD. O-RING STR	1

©2026 by Crafco, Inc. All Rights Reserved

Figure 9-21 Hydraulic Schematic for Optional Heated Chute (continued)

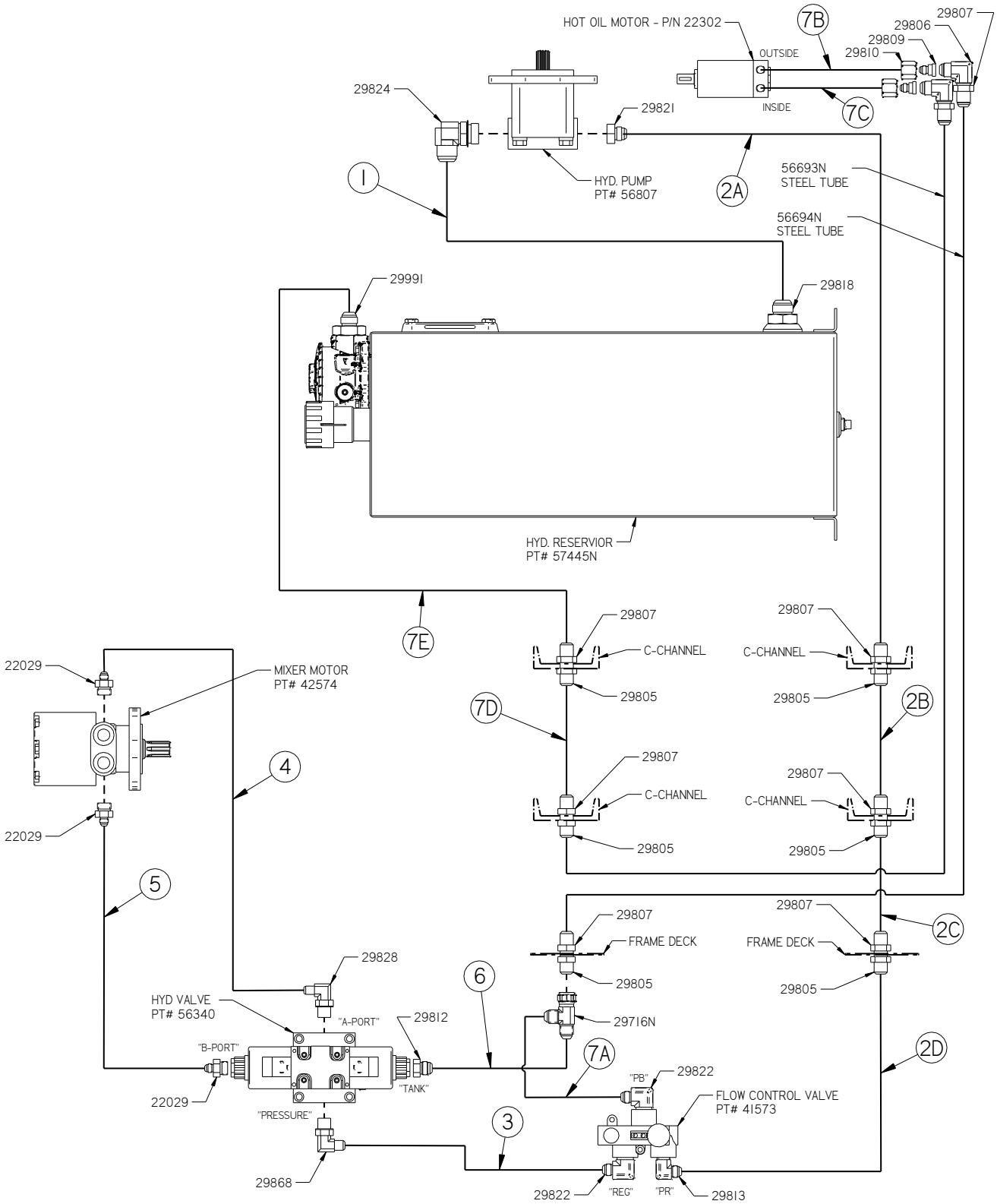

Table 9-21 Hydraulic Schematic for Optional Heated Chute Parts List (continued)

FIG	ITEM	PART NO.	DESCRIPTION	QTY
Fig. 9.21	**6.**	**HYDRAULIC VALVE "OUT" PORT TO "T" RETURN LINE**		
		29812	5/8" TUBE X 5/8" STD. THRD. O-RING STR	1
	6	8M3K 8G-10FJX 8G-10FJX90S 28.75 25	HYD HOSE X 28 3/4" LONG	1
		29716N	5/8" TUBE X 5/8" TUBE SWIVEL NUT BRANCH TEE	1
	7.	**FLOW CONTROL VALVE "PB" PORT TO HYD RESERVOIR RETURN PORT**		
		29822	1/2" TUBE X 3/4" NPT 90° ELBOW	1
	7A	8M3K 8G-8FJX 8G-10FJX 32 29	HYD HOSE X 32" LONG	1
		29716N	5/8" TUBE X 5/8" TUBE SWIVEL NUT BRANCH TEE	1
		29805	5/8" TUBE BULKHEAD FITTING	1
		29807	7/8-14 BULKHEAD LOCKNUT	2
		56694N	HYDRAULIC TUBE, CHUTE PRESSURE	1
		29806	5/8" TUBE BULKHEAD ELBOW	2
		29809	REDUCER, 5/8" TUBE TO 3/8" TUBE	2
		29810	5/8" TUBE NUT	2
	7B	58643N	HYD HOSE X 20 1/4" LONG	1
		40311	3/8 TUBE STRAIGHT THREAD ADAPTER	1
	7C	58644N	HYD HOSE X 18 1/4" LONG	1
		40311	3/8 TUBE STRAIGHT THREAD ADAPTER	1
		29805	5/8" TUBE BULKHEAD FITTING	1
		29807	7/8-14 BULKHEAD LOCKNUT	1
	7D	10M3K 10G-10FJX90L 10G-10FJX 29.75 26	HYD HOSE X 29 3/4" LONG	1
		29805	5/8" TUBE BULKHEAD FITTING	1
		29807	7/8-14 BULKHEAD LOCKNUT	1
	7E	10M3K 10G-12FJX90S 10G-10FJX 42.5 38	HYD HOSE X 42 1/2" LONG	1
		29991	3/4" TUBE X 1 1/4" STD. THRD. O-RING STR	1

©2026 by Crafco, Inc. All Rights Reserved

9.18 Heated Chute Pump and Motor Assembly (P/N 41696)

Figure 9-22 Heated Chute Pump and Motor Assembly (P/N 41696)

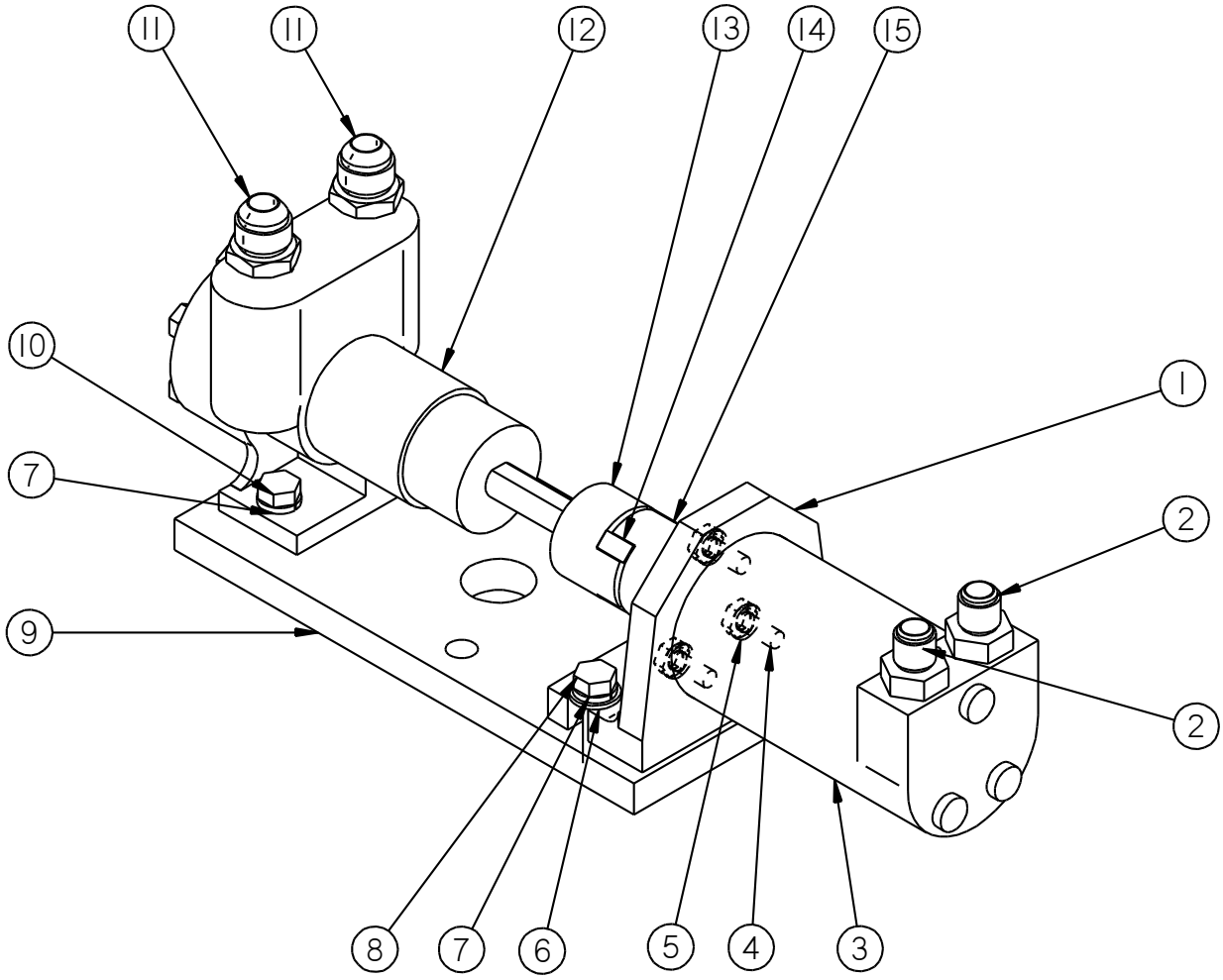

©2026 by Crafco, Inc. All Rights Reserved

Table 9-22 Heated Chute Pump and Motor Assembly Parts List

FIG.	ITEM	PART NO.	DESCRIPTION	QTY
Fig. 9.22	1	22303	HYD. MOTOR MNTG BRACKET	1
	2	40311	STRAIGHT THREAD ADAPTER	2
	3	22302	HYDRAULIC MOTOR	1
	4	28850	1/4-28 X 5/8” HEX SCREW	3
	5	28645	1/4” SPLIT WASHER	3
	6	28671	5/16” SAE FLAT WASHER	2
	7	28646	5/16” LOCK WASHER	4
	8	28717	5/16-18 X 1 1/4” BOLT	2
	9	41689	H.O. MOUNTING PLATE	1
	10	28715	5/16-18 X 3/4” BOLT	2
	11	29844	ADAPTER, JIC MP 8MJ-8MP	2
	12	41280	HOT OIL CIRCULATING PUMP	1
	13	41180	COUPLING HALF, 1/2” BORE	1
	14	41182	SPIDER FOR COUPLING	1
	15	41695	COUPLING HALF, 5/8” BORE	1
	NS	45622	OIL PUMP REBUILD KIT, INCLUDES BELOW	1
			6 SCREWS, 1 IDLER PIN, 1 HEAD, 1 IDLER, 3 PACKING GLANDS	
	NS	45621	OIL PUMP SEAL KIT, INCLUDES BELOW	1
			1 NUT, 1 OTR GLND, 3 PACK GLNDS, 1 INR GLND, 1 SPRING, 2 HEAD GASKETS	
	NS	45620	3 PACKING GLAND RINGS, OIL PUMP	1

©2026 by Crafco, Inc. All Rights Reserved

Chapter 9 Illustrated Parts List

9.19 Patcher 4 Options

Figure 9-23 Patcher 4 Options

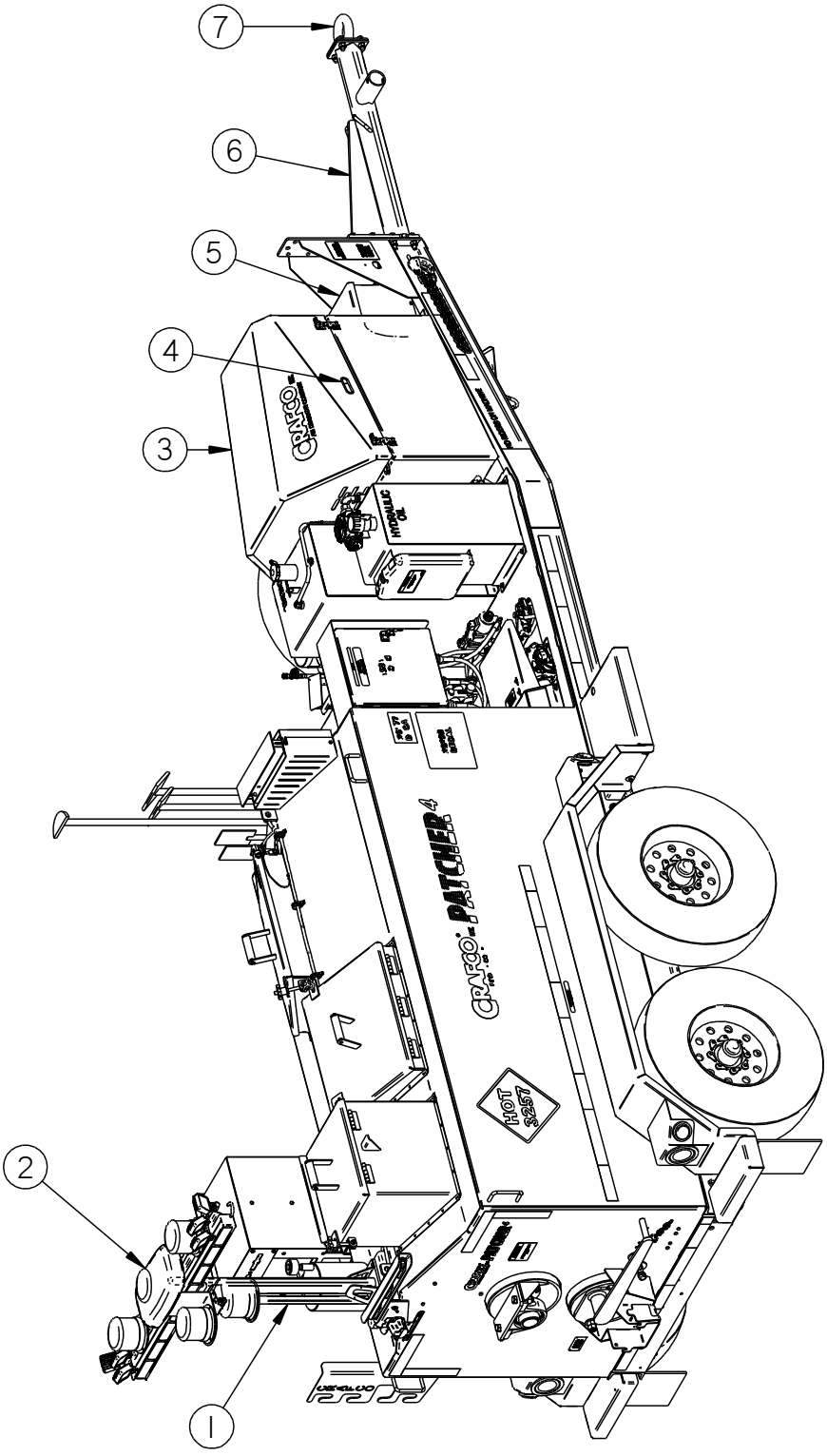

©2026 by Crafco, Inc. All Rights Reserved

Chapter 9 Illustrated Parts List

Table 9-23 Options Parts List

FIG.	ITEM	PART NO.	DESCRIPTION	QTY
Fig. 9.23	1	24095K	MAST MOUNTED STROBE LIGHT, CLASS II	1
	1	24095KCL1	MAST MOUNTED STROBE LIGHT, CLASSI/CA TITLE 13	1
	2	VARIOUS	SAFETY & WORK LIGHTS, SEE SALES BROCHURE	
	3	45535	ENGINE COVER	1
	NS	45599	INSULATED ENGINE COVER (NOT SHOWN)	1
	NS	46748	GAS SPRING FOR ENG COVER (NOT SHOWN)	1
	NS	46374	INSULATION KIT, ENG COVER (NOT SHOWN)	1
	4	43746	NEOPRENE HANDLE ENGINE COVER	1
	5	24086	LOCKABLE BATTERY BOX	1
	6	20150	39” HITCH EXTENSION	1
	6	20140	28” HITCH EXTENSION	1
	6	20120	18” HITCH EXTENSION	1
	7	20014	3” PINTLE HITCH	1
	7	20016	2½” PINTLE HITCH	1
	NS	56895N	MATERIAL CHUTE KIT	1
	NS	56890N	MATERIAL CHUTE KIT, HEATED	1

©2026 by Crafco, Inc. All Rights Reserved

Chapter 9 Illustrated Parts List

Figure 9-24 Patcher 4 Options

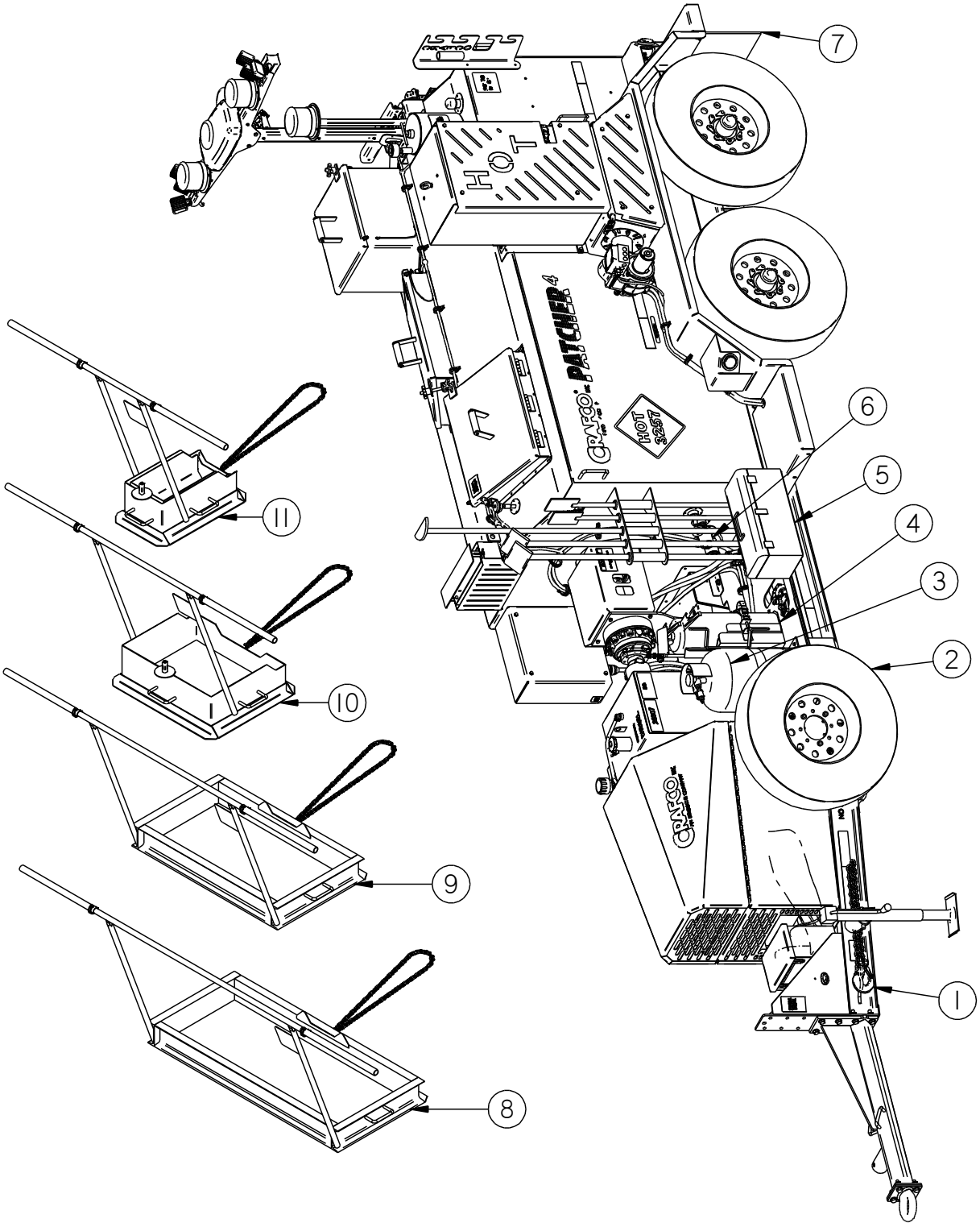

©2026 by Crafco, Inc. All Rights Reserved

Table 9-24 Options Parts List (continued)

FIG.	ITEM	PART NUMBER	DESCRIPTION	QTY
Fig. 9.24	1	26119	3/8” HOOK W/SAFETY LATCH	2
	2	56620N	WHEEL AND TIRE ASSEMBLY, PATCHER 4	4
	3	57781	PROPANE TORCH KIT (INCLUDES 30# LP BOTTLE)	1
	4	26058	10# FIRE EXTINGUISHER	1
	4	26059	MOUNTING BRACKET (10# FIRE EXTINGUISHER)	1
	4	26060	20# FIRE EXTINGUISHER	1
	4	26061	MOUNTING BRACKET (20# FIRE EXTINGUISHER)	1
	5	26098	TOOLBOX (REQUIRES P/N 57444N – MOUNTING PLATE)	1
	6	24190K	HEATER, FIREROD, 110V (STANDARD)	2
	6	24194K	HEATER, FIREROD, 220V	2
	7	56886N	MUD FLAP, PATCHER 4	2
	8	58520	4’ CENTER DRAG BOX KIT	1
	9	58517	3’ CENTER DRAG BOX KIT	1
	10	57886	24” CENTER DRAG BOX KIT	1
	11	57885	10” & 4” CENTER DRAG BOX KIT	1

©2026 by Crafco, Inc. All Rights Reserved

Chapter 10 Tools and Accessories

10.0 Tools and Accessories

Patching Tools



Crafco Ironing Wand w/ 4 ft. 6 in. handle
PN 32243
Used as a leveling and a warming tool for the proper application of TechCrete



Crafco Chute Scraper w/ 2 ft. handle
PN 32246
Used for cleaning the chute on the Patcher II and Patcher 4



Crafco Tank Scraper w 6 ft. handle
PN 32258
Used for cleaning the Patcher II and Patcher 4 tanks.



Crafco Shoebox w/ 6 ft. Handle

PN 58550N - 8" x 4" x 3"	PN 58540N - 8' x 4" x 6"
PN 32350 - 8" x 8" x 3"	PN 32255 - 8" x 8" :
PN 32351 - 8' x 10" x 3"	PN 32250 - 8" x 10'
PN 32352 - 8" x 12" x 3"	PN 32252 - 8" x 12'
PN 32353 - 8" x 14" x 3"	PN 32253 - 8" x 14'

Used for assisting placement of PolyPatch
Use the size suitable for your application. Fill using the Material Handler or Techcrete Bucket

Lances / Torches



Crafco Hand Torch
PN 25012 - 20 ft. Hose
PN 25016 - 12 ft. Hose
PN 25021 - 50 ft. Hose
Used on the E-Z Pour 50, Patcher II and Patcher 4



Crafco Cold Air Lance
PN 42648
Use this tool in conjunction with an air compressor to blow cracks and joints clean



Crafco High Velocity Heat Lance
PN 45650
Requires air compressor and propane supply. Features Auto ignition and includes moisture trap, regulator and 40 ft. hose.

©2026 by Crafco, Inc. All Rights Reserved

Chapter 10 Tools and Accessories

Tools and Accessories (continued)



Crafco Heavy Duty Squeegee w/Aluminum Handle
PN# 27199
Crafco Replacement Blade PN# 27195
4 in. x 18 in. x 3/8 in.

Crafco Heavy Duty Compact Squeegee w/Wood or Aluminum Handle
PN#27245
PN#27245W (Wood Handle)
Crafco Replacement Blade PN# 27241
2 ½ in. x 17 in. x 3/8 in.



Crafco Mastic/Techcrete Bucket
PN # 58050N
For transporting Mastic or Techcrete material from the Patcher II or Patcher 4 to the Repair area.



Crafco Hot Mastic Applicator
PN# 57650
For handling and distributing of patching materials from the Patcher II to the repair area. Propane heated with material side discharge gate.

©2026 by Crafco, Inc. All Rights Reserved



©2026 Crafco, Inc.