SUPER SHOT 125 DIESEL COMPRESSOR
70CFM EU MELTER

Parts Manual - 26635N
Revision J

Fill in appropriate fields that apply to this machine

Machine S/N: _____

Hose S/N: _____

Wand S/N: _____

Pump S/N: _____

Engine S/N: _____

Compressor S/N: _____

Revisions

Revision	Date
0) Initial Release	1/29/2020
A) Added part number for flow control cartridge valve, Fig 9-10, Table 9-10. Added information for changing heat transfer oil, section 6.16, table 6-9, Fig. 6-2	5/05/2020
B) Updated control box part number and schematics	8/3/2020
C) Updated Table 6-5 General Maintenance Parts and Engine parts list	9/2/2020
D) Added Ultra-Low Sulfur note to the diesel, changed to low idle on start up. Fuel tank changed to a FMCSA compliant tank, updated tables, and figures (9-1, 9-2, 9-3, 9-16 and 9-17). Added 47247N and 47277N shoebox covers to the parts list.	5/6/2021
E) Corrected a typo in the material pump troubleshooting Table 8-23 (2a). Added burner fuel filter change in Table 6-2. Switched to the SS Flex Boom, added parts breakdown. Added flex boom features to the maintenance chapter.	1/3/2022
F) Added engine radiator maintenance information on table 6-2. Table 9-19 Item 1 was 45417.	9/2023
G) Updated Safety Information Chapter 2.0 and Section 5.12. Updated part number for both hydraulic and diesel tank assemblies in Table 9-1 & 9-2.	2/2024
H) Updated control box 47252N and Chapter 8 trouble shooting steps and drawings.	4/2025
J) Logo change, warranty update, copyright update, removed 32259 heat lance and added 47970N washer, added engine cover service access.	10/2026

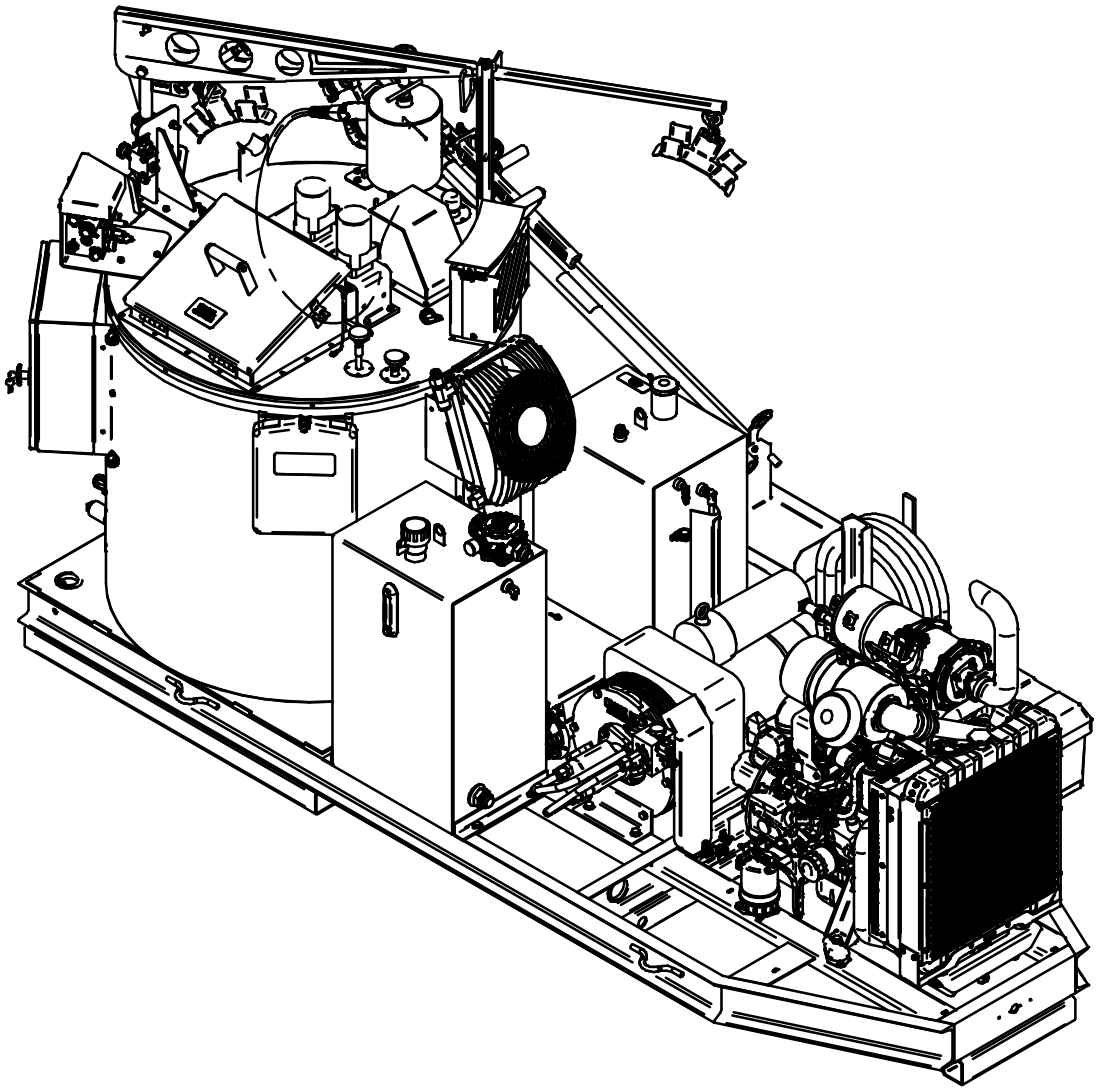

Super Shot 125 Diesel Compressor 70 CFM EU Melter
PN 48300N

Table of Contents

1.0 About This Manual 1-1
1.1 How to use this manual 1-1
2.0 Safety Precautions 2-1
2.1 General Safety 2-1
2.2 Personal Safety 2-1
2.3 Equipment or Operational Safety 2-1
2.4 California Proposition 65 2-2
2.4.1 All Crafco Equipment 2-2
2.4.2 All Crafco Equipment using a diesel engine 2-2
2.5 Towing or Driving for Transporting with Burner On 2-3
2.6 Safety Symbols and Notices 2-4
3.0 Limited Warranty 3-1
3.1 Warranty Claim Instructions 3-2
4.0 Machine Specifications 4-1
5.0 Operating Instructions 5-1
5.1 Preparing the Machine for Start Up 5-1
5.2 Machine Start Up 5-3
5.3 Air Compressor 5-5
5.4 About the Heated Hose, Wand, Valve, and Tip Guard 5-6
5.5 Operating the Electric Hose 5-7
5.6 Dispensing the Material 5-8
5.7 About the Active Screen Pump Protection 5-8
5.8 Loading Material into the Sealant Tank 5-9
5.8.1 Material Tank Depth Chart 5-10
5.9 Shutting Down and Cleaning Out the Machine 5-11
5.10 Storing the Electric Hose for Transport 5-12
5.11 Overnight Heater Use 5-13
5.12 Mounting a Skid Machine 5-14
5.13 Shot Timer Option 5-16
5.13.1 Shot Timer Troubleshooting Manual 5-17
5.14 Storing the Machine 5-17
6.0 Maintenance Instructions 6-1
6.1 Engine 6-1
6.2 Air Compressor 6-1

Table of Contents

6.3 Hydraulic System 6-1
6.4 Heat Transfer Oil 6-1
6.5 Material Sensor Tube 6-1
6.6 Cleaning Material Tank and Sensor Area 6-2
6.7 Temperature Control Calibration 6-3
6.8 Cleaning the Melter 6-3
6.9 Maintenance Chart 6-4
6.10 Service Instructions 6-5
6.11 General Maintenance Parts 6-5
6.12 Recommended Spare Parts 6-6
6.13 Recommended Fluids and Lubricants 6-7
6.14 Applicable Brands of Heat Transfer Oil 6-8
6.15 Typical Heat Transfer Oil Specifications 6-8
6.16 Changing the Heat Transfer Oil 6-9
6.17 Material Pump Replacement 6-10
6.18 Flex Boom Adjustment 6-23
6.18.1 Strut Adjustment 6-23
6.18.2 Locked Position of the Flex Boom 6-23
6.18.3 Grease Zerk 6-24
6.18.4 Boom Swing Adjustment Nut 6-24
6.19 Wand Repair Instructions 6-25
6.19.1 Cable Replacement 6-25
6.19.2 Switch Replacement 6-25
6.19.3 Terminal Block Replacement 6-25
6.19.4 Wand Handle Replacement 6-26
6.20 Burner Fuel Filter Replacement 6-29
7.0 How to Use a Multimeter 7-1
7.1 Checking DC Voltage with a Multimeter 7-1
7.2 Checking AC Voltage with Multimeter 7-1
7.3 Checking Resistance (Ohms) 7-1
7.3.1 How to Check Wire Continuity 7-1
7.3.2 How to Check RTD Sensor 7-1
7.4 Checking Amperage 7-2
8.0 Troubleshooting 8-1
8.1 Diesel Burner Troubleshooting 8-1

Table of Contents

8.1.1 Symptoms: Burner will Not Ignite 8-1
8.1.2 Burner Electrical Troubleshooting 8-2
8.1.3 Excessive Smoke Coming Out of Exhaust Stack 8-8
8.1.4 Burner Lights but Shuts Down After 15 Seconds 8-8
8.1.5 Testing DC Controller 8-9
8.1.6 Burner Fuel Solenoid Testing 8-9
8.1.7 Burner Ignition Coil Testing 8-10
8.1.8 Bleeding the Burner 8-10
8.1.9 Sealant is Heating Slowly 8-12
8.2 Mixer Troubleshooting 8-13
8.2.1 Symptom: Mixer Does Not Rotate 8-13
8.2.2 Mixer Electrical Troubleshooting 8-14
8.2.3 Mixer Hydraulic Troubleshooting 8-18
8.3 Hose Troubleshooting 8-21
8.3.1 Symptom: Hose Does Not Heat 8-21
8.3.2 Hose Electrical Troubleshooting 8-21
8.3.3 Symptom: Trigger is not Working 8-27
8.3.4 RTD Sensor Ohms vs. Temperature 8-28
8.4 Pump Troubleshooting 8-30
8.4.1 Symptom: Material Does Not Dispense When the Pump is Activated 8-30
8.4.2 Pump Electrical Troubleshooting 8-31
8.4.3 Pump Hydraulic Troubleshooting 8-37
8.5 DPF and Regen Modes 8-38
8.6 Icons for the Regen Modes 8-39
8.7 Engine Diagnostic Trouble Codes (DTC) 8-40
8.7.1 How to use the Diagnostic Trouble Code Table 8-40
8.7.2 Engine DTC Table (48000N) 8-40
9.0 About the Illustrated Parts List 9-1
9.1 Ordering Crafco Parts 9-1
9.2 Super Shot 125 Diesel (70 CFM) Compressor Melter Skid 9-2
9.3 Tank Assembly 9-8
9.4 Control Box Assembly, PN 47252N 9-10
9.5 Engine Assembly: PN 48000N 9-12
9.6 Hydraulic Control Valve Assembly: PN 45420 9-16
9.7 Material Flow Control Assembly: PN 46060 9-18

Table of Contents

9.8 Pump/Mixer Motor Assembly: PN 44832 9-20
9.9 Diesel Burner Assembly: PN 46380 9-22
9.10 Hydraulic Diagram: PN 26663 9-24
9.11 Diesel Fuel Line Schematic 9-30
9.12 Electrical Schematic 9-34
9.13 Air Compressor Assembly: PN 45345 9-36
9.14 Hydraulic Compressor Valve Assembly: PN 45425 9-38
9.15 High Output Air Lance PN: 47483N (standard) 9-40
9.16 High Output Air Lance with Water Separator PN: 47491N (optional) 9-41
9.17 Wand Assembly PN 52200 9-42
9.18 Super Shot Flex Boom 9-44
9.19 Engine Cover Assembly PN: 48120N (optional) 9-46
9.20 Hot Air Lance (optional) 9-48
10.0 Tools and Accessories 10-1

List of Figures

Fig. 5-1 Hydraulic Fluid Level and Temp. Gauge 5-2
Fig. 5-2 Heat Transfer Oil Dip Stick 5-2
Fig. 6-1 Temperature Control Calibration 6-3
Fig. 6-2 Heat Transfer Oil Drain and Fill Ports 6-9
Fig. 6-3 Agitator and Pump Shaft Alignment 6-10
Fig. 6-4 Removal of Motor Mount Assembly 6-11
Fig. 6-5 Supporting the Agitator Away from the Material Pump 6-12
Fig. 6-6 Unbolting the Material Pump 6-13
Fig. 6-7 Cleaning of the Pump Mounting Plate 6-14
Fig. 6-8 Pump Drive Shaft Dry Fit to Material Pump 6-15
Fig. 6-9 New Material Pump Mounting 6-16
Fig. 6-10 Agitator Shaft and Paddles Mounting 6-17
Fig. 6-11 Alignment Washer 6-18
Fig. 6-12 Pump Shaft Placement 6-19
Fig. 6-13 Pump Shaft to Hydraulic Pump Motor Placement 6-20
Fig. 6-14 Agitator Connecting Link 6-21
Fig. 6-15 Agitator Chain Tightening Steps 6-22
Fig. 6-16 Flex Boom Adjustment 6-23
Fig. 6-17 Switch Wire Location 6-26
Fig.6-18 Wire Routing 6-26
Fig.6-19 Terminal Block Wiring 6-27
Fig.6-20 Actuator Spring Location 6-27
Fig.6-21 Actuator / Trigger Assembly 6-28
Fig. 7-1 Standard Multimeter 7-2
Fig. 7-2 Clamp – On Amp Meter/Multimeter 7-3
Fig. 8-1 Diesel Burner Schematic 8-7
Fig. 8-2 Diesel Burner Electrode Adjustment 8-11
Fig. 8-3 Diesel Burner Air Settings 8-11
Fig. 8-4 Checking Din Plug Voltage 8-16
Fig. 8-5 Mixer Schematic 8-17
Fig. 8-6 Hydraulic Valve Pressure Setting 8-19

List of Figures

Fig. 8-7 Din Plug Layout 8-20
Fig. 8-8 Junction Box Voltage Testing 8-24
Fig. 8-9 Hose Circuit Schematic 8-25
Fig. 8-10 Junction Box Wiring 8-26
Fig. 8-11 Pump Schematic 8-36
Fig. 8-12 Engine Control Display DTC 8-40
Fig. 9-1 Super Shot 125 Diesel (70 CFM) Compressor Melter Skid 9-2
Fig. 9-2 Super Shot 125 Diesel (70 CFM) Compressor Melter Skid (continued) 9-4
Fig. 9-3 Super Shot 125 Diesel (70 CFM) Compressor Melter Skid (continued) 9-6
Fig. 9-4 Tank Assembly: All Models 9-8
Fig. 9-5 Control Box Assembly, PN 47252N 9-10
Fig. 9-6 Engine Assembly: PN 48000N 9-12
Fig. 9-7 Engine Assembly: PN 48000N (continued) 9-14
Fig. 9-8 Hydraulic Control Valve Assembly: PN 45420 9-16
Fig. 9-9 Material Flow Control Assembly: PN 46060 9-18
Fig. 9-10 Pump/Mixer Motor Assembly: PN 44832 9-20
Fig. 9-11 Diesel Burner Assembly: PN 46380 9-22
Fig. 9-12 Hydraulic Diagram: PN 26663 9-24
Fig. 9-13 Hydraulic Diagram: PN 26663 (continued) 9-26
Fig. 9-14 Hydraulic Diagram: PN 26663 (continued) 9-28
Fig. 9-15 Diesel Fuel Line Schematic 9-30
Fig. 9-16 Diesel Fuel Line Schematic (continued) 9-32
Fig. 9-17 Electrical Schematic 9-34
Fig. 9-18 Air Compressor Assembly: PN 45345 9-36
Fig. 9-19 Hydraulic Compressor Valve Assembly: PN 45425 9-38
Fig. 9-20 High Output Air Lance PN: 47483N (standard) 9-40
Fig. 9-21 High Output Air Lance with Water Separator PN: 47491N (optional) 9-41
Fig. 9-22 Wand Assembly PN 52200 9-42
Fig. 9-23 Super Shot Flex Boom 9-44
Fig. 9-24 Engine Cover Assembly PN: 48120N (optional) 9-46
Fig. 9-25 Hot Air Lance (optional) 9-48

List of Tables

Table 2-1 Safety Symbols and Notices 2-4
Table 2-2 Safety Symbols and Notices (continued) 2-5
Table 4-1 Machine Specifications 4-1
Table 5-1 Preparing the Machine for Start Up 5-1
Table 5-2 Starting the Burner 5-3
Table 5-3 Starting the Burner for Electric Hose (continued) 5-4
Table 5-4 Operating the Electric Hose 5-7
Table 5-5 Dispensing the Material 5-8
Table 5-6 Loading Material into the Sealant Tank 5-9
Table 5-7 Material Tank Depth Chart 5-10
Table 5-8 Shutting Down and Cleaning Out the Machine 5-11
Table 5-9 Hose for Transport Instructions 5-12
Table 5-10 Overnight Heater Use 5-13
Table 5-11 Mounting a Skid Machine 5-14
Table 5-12 Shot Timer Option 5-16
Table 5-13 Shot Timer Option (continued) 5-17
Table 6-1 Air Compressor Maintenance Chart 6-1
Table 6-2 Maintenance Chart 6-4
Table 6-3 Service Instructions 6-5
Table 6-4 General Maintenance Parts 6-5
Table 6-5 General Maintenance Parts (continued) 6-6
Table 6-6 Recommended Spare Parts 6-6
Table 6-7 Recommended Fluids and Lubricants 6-7
Table 6-8 Applicable Brand of Heat Transfer Oil 6-8
Table 6-9 Changing the Heat Transfer Oil 6-9
Table 6-10 Material Pump Replacement 6-10
Table 6-11 Material Pump Replacement (continued) 6-11
Table 6-12 Material Pump Replacement (continued) 6-12
Table 6-13 Material Pump Replacement (continued) 6-13
Table 6-14 Material Pump Replacement (continued) 6-14
Table 6-15 Material Pump Replacement (continued) 6-15

List of Tables

Table 6-16 Material Pump Replacement (continued) 6-16
Table 6-17 Material Pump Replacement (continued) 6-17
Table 6-18 Material Pump Replacement (continued) 6-18
Table 6-19 Material Pump Replacement (continued) 6-19
Table 6-20 Material Pump Replacement (continued) 6-20
Table 6-21 Material Pump Replacement (continued) 6-21
Table 6-22 Material Pump Replacement (continued) 6-22
Table 6-23 Burner Fuel Filter Replacement 6-29
Table 8-1 Basic Visual Troubleshooting 8-1
Table 8-2 Basic Visual Troubleshooting (continued) 8-2
Table 8-3 Burner Electrical Troubleshooting 8-2
Table 8-4 Burner Electrical Troubleshooting (continued) 8-3
Table 8-5 Burner Electrical Troubleshooting (continued) 8-4
Table 8-6 Burner Electrical Troubleshooting (continued) 8-5
Table 8-7 Burner Electrical Troubleshooting (continued) 8-6
Table 8-8 Smoke Coming Out of Exhaust Stack 8-8
Table 8-9 Burner Lights but Shuts Down After 15 Seconds 8-8
Table 8-10 Testing the DC Controller 8-9
Table 8-11 Burner Fuel Solenoid Test 8-9
Table 8-12 Burner Ignition Coil Test 8-10
Table 8-13 Sealant is Heating Slowly 8-12
Table 8-14 Basic Visual Troubleshooting 8-13
Table 8-15 Mixer Electrical Troubleshooting 8-14
Table 8-16 Mixer Electrical Troubleshooting (continued) 8-15
Table 8-17 Mixer Hydraulic Troubleshooting 8-18
Table 8-18 Basic Visual Hose Troubleshooting 8-21
Table 8-19 Hose Electrical Troubleshooting 8-21
Table 8-20 Hose Electrical Troubleshooting (continued) 8-22
Table 8-21 Hose Electrical Troubleshooting (continued) 8-23
Table 8-22 Hose Electrical Troubleshooting (continued) 8-24
Table 8-23 Trigger is Not Working 8-27

List of Tables

Table 8-24 RTD Sensor Ohms vs. Temperature 8-28
Table 8-25 RTD Sensor Ohms vs. Temperature (continued) 8-29
Table 8-26 Basic Visual Pump Troubleshooting 8-30
Table 8-27 Pump Electrical Troubleshooting 8-31
Table 8-28 Pump Electrical Troubleshooting (continued) 8-32
Table 8-29 Pump Electrical Troubleshooting (continued) 8-33
Table 8-30 Pump Electrical Troubleshooting (continued) 8-34
Table 8-31 Pump Electrical Troubleshooting (continued) 8-35
Table 8-32 Pump Hydraulic Troubleshooting 8-37
Table 8-33 Engine DTC Table PN 48000N 8-40
Table 8-34 Engine DTC Table PN 48000N (continued) 8-41
Table 8-35 Engine DTC Table PN 48000N (continued) 8-42
Table 8-36 Engine DTC Table PN 48000N (continued) 8-43
Table 8-37 Engine DTC Table PN 48000N (continued) 8-44
Table 8-38 Engine DTC Table PN 48000N (continued) 8-45
Table 8-39 Engine DTC Table PN 48000N (continued) 8-46
Table 8-40 Engine DTC Table (continued) 8-47
Table 8-41 Engine DTC Table (continued) 8-48
Table 8-42 Engine DTC Table (continued) 8-49
Table 9-1 Super Shot 125 Diesel (70 CFM) Compressor Melter Skid 9-3
Table 9-2 Super Shot 125 Diesel (70 CFM) Compressor Melter Skid (continued) 9-5
Table 9-3 Super Shot 125 Diesel (70 CFM) Compressor Melter Skid (continued) 9-7
Table 9-4 Tank Assembly: All Models 9-9
Table 9-5 Control Box Assembly, PN 47252N 9-11
Table 9-6 Engine Assembly: PN 48000N 9-13
Table 9-7 Engine Assembly: PN 48000N (continued) 9-15
Table 9-8 Hydraulic Control Valve Assembly: PN 45420 9-17
Table 9-9 Material Flow Control Assembly: PN 46060 9-19
Table 9-10 Pump/Mixer Motor Assembly: PN 44832 9-21
Table 9-11 Diesel Burner Assembly: PN 46380 9-23
Table 9-12 Hydraulic Diagram: PN 26663 9-25

List of Tables

Table 9-13 Hydraulic Diagram: PN 26663 (continued) 9-27
Table 9-14 Hydraulic Diagram: PN 26663 (continued) 9-29
Table 9-15 Diesel Fuel Line Schematic 9-31
Table 9-16 Diesel Fuel Line Schematic (continued) 9-33
Table 9-17 Electrical Schematic 9-35
Table 9-18 Air Compressor Assembly: PN 45345 9-37
Table 9-19 Hydraulic Compressor Valve Assembly: PN 45425 9-39
Table 9-20 High Output Air Lance PN: 47483N (standard) 9-40
Table 9-21 High Output Air Lance with Water Separator PN: 47491N (optional) 9-41
Table 9-22 Wand Assembly PN 52200 9-43
Table 9-23 Super Shot Flex Boom 9-45
Table 9-24 Engine Cover Assembly PN: 48120N (optional) 9-47
Table 9-25 Hot Air Lance (optional) 9-49

Chapter 1 Introduction

1.0 About This Manual

This manual is supplied with each new Crafco Super Shot 125 Diesel Melter. The manual assists your machine operators in the proper use of the melter applicator and provides information about the machine's mechanical functions.

Your Crafco Super Shot 125 Diesel Melter is specially made to give excellent service and save maintenance expense. However, as with all specially engineered equipment, you get best results at minimum cost if you:

Operate your machine as instructed in this manual.

Maintain your machine regularly as stated in this manual.

1.1 How to use this manual

This manual is formatted to start each new chapter on the right page. There may be a blank page on the left page if the previous chapter ends on the right page.

If you are viewing this in a digital format (PDF) the following features are available:

1. The Table of Contents, List of Tables, and List of Figures are all hyperlinks; when mouse is left-clicked on section, table, or figure you will be sent to that page.
2. The blue highlighted text throughout the manual is a hyperlink; when mouse is left clicked you will be sent to that page, table, or figure.
3. The panel to the left in the PDF is a bookmarks panel, if you left click on any section/heading in the bookmarks panel you will be sent to that page.

©2026 by Crafco All Rights Reserved

Chapter 2 Safety

2.0 Safety Precautions

For more in-depth safety information, please see Safety Manual (PN 26221), which comes with the machine. Or contact your nearest authorized Crafco Distributor at crafco.com/Distributors.

2.1 General Safety

- Crafco assumes no liability for an accident or injury incurred through improper use of the machine.
- Read this manual thoroughly before operating the machine.
- Obey all CAUTION and WARNING signs posted on the machine.
- Make sure an operator fully knows how to operate the machine before using the machine.

2.2 Personal Safety

- The high operating temperatures of this machine and the sealant it contains requires that protective clothing, gloves, hard-soled shoes, and safety glasses or a face shield be worn at all times by operators of the machine.
- Pay attention to the surfaces you walk and work on, and look out for hazards like uneven ground, spills, other equipment, and debris. Keep your vision clear and the working area clear of obstructions.
- Prevent water from going into any part of the machine. If there is indication of water in the heat transfer oil system, warm heating oil to 250-300°F for 2 to 3 hours.
- Bodily contact with hot sealant or heat transfer oil can cause severe burns.
- If the mixer is not stopped before adding solid material, hot material can get on an operator's body and cause severe burns.
- Keep hands, feet, and clothing away from all moving parts.
- Never attempt to clean out tank with machine on and engine running.
- Never operate the machine without guards in place.
- When maintaining, cleaning or repairing machine, make sure the battery is disconnected to prevent accidental energizing and operation of machine, and have a second person or guarding available to monitor and prevent access to the machine.
- Do not operate the machine when there is a chance of lightning discharge in the atmosphere.

2.3 Equipment or Operational Safety

- Do not operate the machine in buildings or work areas that do not have sufficient airflow.
- Shut-down the burner and the engine before refilling the fuel tank.
- Make sure the mixer stops before adding solid material to the sealant tank. Lift the lid, place the material on the lid, and close the lid. The mixer should restart automatically.
- Always keep a correctly maintained fire extinguisher near the machine and know how to use it.

©2026 by Crafco All Rights Reserved

- DO NOT heat transfer oil to a temperature of more than 525°F.
- DO NOT put too much heat transfer oil in the reservoir. The expansion of oil while it heats up can cause overflow. Check the oil each day before starting the burner. With the machine on a level surface, check the heat transfer oil level using the mark on the dipstick closest to the current oil temperature (0°F, 70°F, or 150°F) See Fig. 5-2 Heat Transfer Oil Dip Stick. Add oil if required. Use only recommended heat transfer oil. Change the oil after 500 hours of machine operation, or one year, whichever comes first.
- Follow the operating instructions for starting and shutting down the burner. Instructions are mounted on the control box on the machine.
- Calibrate the temperature control operation after each 50 hours of machine operation. Refer to section 6.7 Temperature Control Calibration.
- Replace any hoses that show signs of wear, fraying, or splitting.
- Make sure all fittings and joints are tight and do not leak each time the machine is used.
- Make sure battery cover is secure and cables are not damaged before operation.
- Do not leave the machine unattended while the burner is lit.
- Tighten all bolts and screws every 100 hours of machine operation.

2.4 California Proposition 65

The state of California currently maintains a list of chemicals that can cause cancer, birth defects, or other reproductive harm. your Crafco equipment comes with the following warnings:

2.4.1 All Crafco Equipment

⚠ **WARNING:** Cancer and Reproductive Harm - www.P65Warnings.ca.gov
26471N

2.4.2 All Crafco Equipment using a diesel engine

⚠ **WARNING:** Breathing diesel engine exhaust exposes you to chemicals known to the State of California to cause cancer and birth defects or other reproductive harm.

- Always start and operate the engine in a well-ventilated area.
- If in an enclosed area, vent the exhaust to the outside.
- Do not modify or tamper with the exhaust system.
- Do not idle the engine except as necessary.

For more information go to www.P65warnings.ca.gov/diesel.
26307

©2026 by Crafco All Rights Reserved

2.5 Towing or Driving for Transporting with Burner On

The burner in your Crafco machine is designed for operation only while the unit is parked or towed at slow speeds while applying sealant at a jobsite. When driving or towing this machine for transport, the burner shall be turned off. Operating the burner when transporting the machine is a violation of The Code of Federal Regulations, CFR Title 49, Part 392, Subpart G, 392.67 and may cause damage to the burner and/or machine.

CAUTION
The burner in your Crafco machine is designed for operation only while the unit is parked or towed at slow speeds while applying sealant at a jobsite. **When driving or towing this machine for transport, the burner shall be turned off.**

©2026 by Crafco All Rights Reserved

2.6 Safety Symbols and Notices

Important safety symbols and notices are marked on the machine and in this manual. Failure to comply could result in equipment damage, operational malfunction, serious injury, or death. Please read and comply with all symbols and notices. The table below includes the most commonly used symbols and notices.

Table 2-1 Safety Symbols and Notices

Symbol	Item	Remarks
WARNING	Warning	Refers to possible bodily injury or death.
CAUTION	Caution	Refers to possible equipment damage or operational malfunction.
	Severe Burn Hazard	Hot material can cause severe burns.
	Protective Shoes	Wear hard-soled work shoes.
	Protective Gloves	Wear heat resistant gloves.
	Protective Face or Eye Wear	Wear face shield or safety glasses.
	Body Crush Hazard	Do not stand between trailer and hitch when hooking melter to truck.

©2026 by Crafco All Rights Reserved

Table 2-2 Safety Symbols and Notices (continued)

Symbol	Item	Remark
	Crush Hazard	Keep feet and legs clear.
	Pinch Hazard	Keep hands and feet clear.
	Exhaust Hazard	Avoid breathing engine exhaust.
	Read Manual	Read and understand operator and safety manuals before operating machine.

©2026 by Crafco All Rights Reserved

Chapter 3 Warranty Information

3.0 Limited Warranty

Crafco (Manufacturer), or one of its affiliated distributors, will replace for the original purchaser free of charge any parts found upon examination by the Manufacturer, to be defective in material or workmanship. This warranty is for a period **two years** from the invoice date, but excludes engine or components, tires, and battery as these items are subject to warranties issued by their manufacturers.

Crafco shall not be liable for parts that have been damaged by accident, alteration, abuse, improper lubrication/maintenance, normal wear, or other cause beyond our control.

The warranty provided herein extends only to the repair and/or replacement of those components on the equipment covered above and does not cover labor costs. The warranty does not extend to incidental or consequential damages incurred as a result of any defect covered by this warranty.

All transportation and labor costs incurred by the purchaser in submitting or repairing covered components must be borne by the purchaser. Crafco specifically disavows any other representation, warranty, or liability related to the condition or use of the product.

The warranty is valid only for parts which have been supplied or recommended by Crafco.

CAUTION
Use of replacement parts other than genuine Crafco parts may impair the safety or reliability of your equipment and nullifies any warranty.

©2026 by Crafco All Rights Reserved

Chapter 3 Warranty Information

3.1 Warranty Claim Instructions

Crafco warrants parts and machinery purchased through Crafco, or one of its affiliated distributors, for two years from the invoice date. Wear items are not covered under the Crafco limited warranty. A wear item is defined as but not limited to: material pumps, sealing tips, tires, etc.

If parts fail to function within two years of invoice date, a return authorization number (RA) must be obtained. If the part was purchased through Crafco please contact Crafco returns department at Returns@Crafco.com for an RA number or if purchased through a Crafco distributor please contact your distributor.

Note: if the part has a serial number associated with it, for example; a machine or electric hose or wand, this must be furnished when requesting the RA number. The customer will be emailed an RA form with all instructions to return the item to Crafco. If the part is found to be within the two year warranty period and has not been abused or modified, a credit will be issued to the customer's account or credit card. The customer may request the part be replaced instead of a credit, if desired.

Note: All engine warranties are covered through the engine manufacturer. If you need information for a distributor in your area please contact us and we will direct you to the closest engine distributor.

All parts returned are tested and evaluated. If the part has been modified in any way without prior consent from a Crafco representative, warranty is void.

Please follow the instructions stated below when calling in a Warranty Claim. Failure to follow these procedures may be cause to void the warranty.

Call your local Crafco Distributor. If you do not know who your local distributor is, call a Crafco Customer Service Representative at 602-276-0406 or email CustomerService@Crafco.com for the name, location and telephone number.

On contacting the distributor, be prepared to identify the serial number, model number, engine number, engine manufacturer, and the date of purchase if available.

Should the cause of the malfunction be a defective part, the Distributor will advise you of the procedure to follow for a replacement.

For expedited service, you can purchase the failed part at the time of setting up the return RA, so the part can be delivered to you sooner. Once we receive the failed part back and inspect it, we can credit you for the part if it was found to be defective.

If you have any additional questions regarding warranty repairs and parts, please do not hesitate to call 480-655-8333 or email Returns@Crafco.com.

For Warranty:
Crafco
25527 South Arizona Avenue
Chandler, AZ 85248
Phone: (480) 655-8333
Returns@Crafco.com
.

For all other inquires:
CustomerService@Crafco.com

©2026 by Crafco All Rights Reserved

Chapter 4 Machine Specifications

4.0 Machine Specifications

Table 4-1 Machine Specifications

Specification	PN 48300N
Vat Capacity	132.52 gallons (501.66 liters)
Melt Capacity	1064 lbs. (482.6 kg.) per hour
Heat Transfer Oil Required	34.8 gallons (131.7 liters) at 70°F
Tank Construction	Double boiler type
Tank Opening Size	Single 14” (355.6mm) x 18” (457.2mm)
Maximum Heat Input	246,000 BTUs
Burner and Temperature Control	Diesel-forced air thermostatic control
Engine Diesel	3-cylinder Model Yanmar 3TNV86CT – 43.4 HP @ 3,000 RPM
Drive Mechanism	All hydraulic with infinite speed forward and reverse on material pump. Fixed speed agitator.
Mixer	Full sweep mixer with 2 horizontal paddles, vertical risers.
Axle Capacity	N/A
Tires	N/A
Dry Weight Approximately	4,056 lbs. (1839 kg.)
Diesel Tank Capacity	32 Gal (121L)
Hydraulic Tank Capacity	32 Gal (121L)
Air Compressor	70CFM (1,982 l/m) @125 PSI (8.61 bar)

©2026 by Crafco All Rights Reserved

Chapter 5 Operating Instructions

5.0 Operating Instructions

The Crafco Super Shot 125 Diesel Melter was developed to melt Crafco sealants. However, it works well with most road asphalt and federal specification crack or joint sealants.

Note: DO NOT attempt to operate the machine without using these and all other instructions.

5.1 Preparing the Machine for Start Up

Table 5-1 Preparing the Machine for Start Up

Step	Action
1	Fill the engine fuel tank with ultra-low sulfur diesel fuel. **Note:** Use No. 1 Diesel fuel in cold weather and No. 2 Diesel fuel in warm weather
2	Check the oil level in the engine crankcase. (Refer to the manufacturer's instruction for the engine.)
3	Check the hydraulic fluid level while at a temperature of 70°F (21.1°C). Add fluid if necessary. See Fig. 5-1 Hydraulic Fluid Level and Temp. Gauge
4	With the machine on level surface, check the heat transfer oil level while at a temperature of 70°F. (21.1°C) The oil should be at the full mark on the dipstick. There are two other full marks representing 0°F (-17.8°C) and 150°F (65.6°C). See Fig. 5-2 Heat Transfer Oil Dip Stick. DO NOT overfill or spillage may occur when the oil is heated and expands.
5	Make sure all toggle switches are turned "OFF" and all temperature control dials are set to their minimum settings.
6	Check the oil level in the air compressor if this machine is so equipped.
	WARNING
	The safe operation of this machine is the operator's responsibility. Use extreme care when operating this machine; safety is the result of being careful and paying attention to details. Remember the diesel flame is approximately 2,200°F (1,204.4°C). Some exposed parts of the machine reach 500°F (260°C), the sealant 400°F (204.4°C), and the hydraulic fluid 180°F (85.2°C). Always put on protective clothing, gloves, hard-soled shoes, and safety glasses or a face shield. Be sure that all joints and fittings are tight and leak proof. Immediately replace any hose, that shows any signs of wear, fraying, or splitting. Tighten all bolts, nuts, and screws every 100 hours.

©2026 by Crafco All Rights Reserved

Chapter 5 Operating Instructions

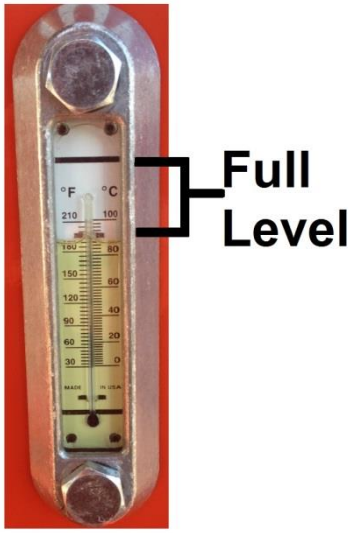

Fig. 5-1 Hydraulic Fluid Level and Temp. Gauge

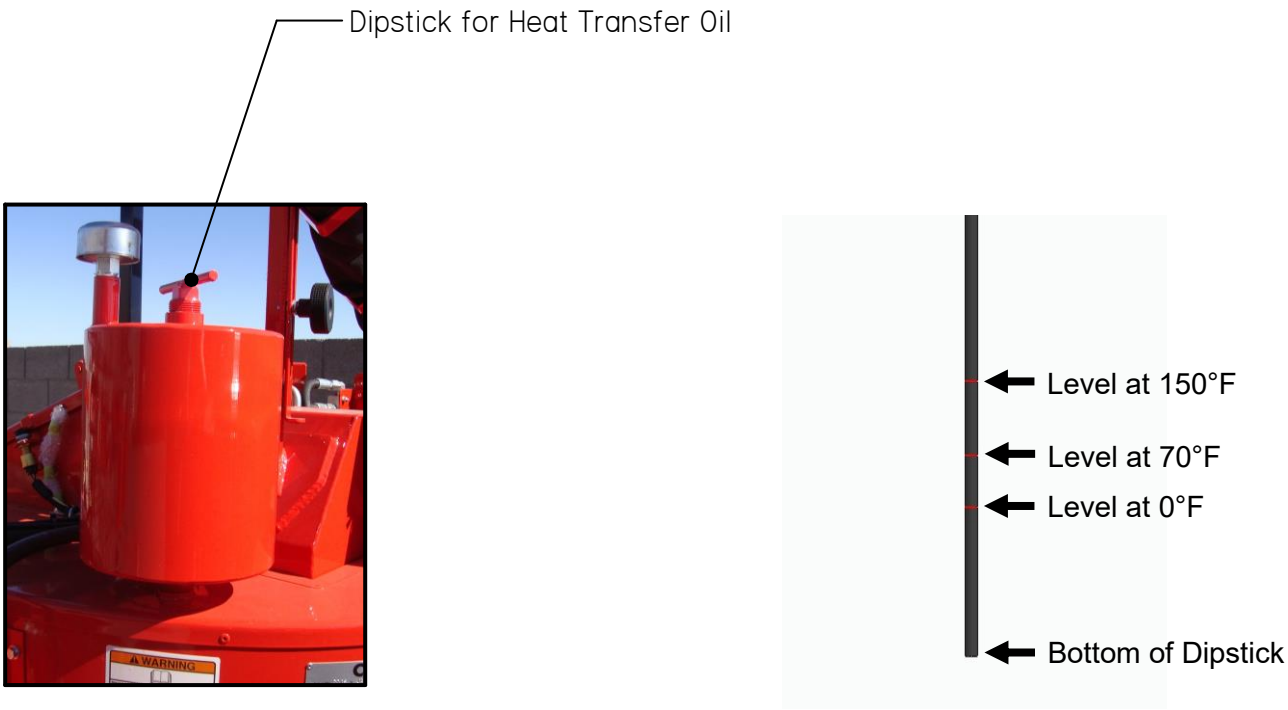

Fig. 5-2 Heat Transfer Oil Dip Stick

5.2 Machine Start Up

Table 5-2 Starting the Burner

Step	Action
1	Fully open the exhaust stack cover.
2	Turn the key to the “ON” position. Allow engine controller to boot up.
2a	To start engine, press “Auto” then “RUN”. Engine will preheat then start. The engine will start and run at low RPM for 30 seconds, then the RPM will increase to medium RPM. When the material temperature reaches 275°F (135°C) or the compressor toggle switch is turned “ON” the RPM will increase to high RPM which is full throttle.
3	Turn the “BURNER” toggle switch in the control box to the “ON” position. The red light marked “BURNER” will illuminate indicating that the material and hot oil temperatures are below set point. When the red light goes off this indicates the material or oil temperatures are up to the set point. **Note:** Just because this light is illuminated does not indicate the burner is actually working.
4	Set the heat transfer oil temperature at 500°F (260°C).
5	Set the material temperature to the manufacturer’s recommended temperature.
	CAUTION
	If the burner fails ignition after 3 attempts the “BURNER LOCKOUT” alarm will sound. To reset burner, hold the “RESET” toggle switch in the “DOWN” position for 5 seconds, then release. The burner should ignite. If the burner still does not ignite, refer to 8.1.1 Symptoms: Burner will Not Ignite to determine the malfunction.
	Important: The solid material in the tank melts first around the walls, and bottom. The material temperature sensor is located by the wall, therefore, it is possible that at the beginning of the melting process the indicated temperature reaches operating temperature, but the material in the center of the tank is still solid. This is normal, and when the heated hose is ready for operation, most of the material in the tank will be melted and heated to the proper application temperature.
6	Allow the heat transfer oil to continue to heat.
7	When the material reaches 275°F (135°C), the mixer light will illuminate which indicates the mixer can be engaged by turning the toggle switch at the control panel to “FORWARD” position. If the mixer does not move, allow the material to heat longer. **Note:** Mixer speed is preset at the factory and cannot be adjusted. The mixer cannot be engaged until the material reaches 275°F (135°C).
	CAUTION
	Jamming the mixer can cause the hydraulic oil to overheat and damage the machine.
8	The hose automatically turns “ON” when the material temperature reaches 275°F (135°C). The red light marked ‘HEATED HOSE” will illuminate when the hose control is calling for heat.

Table 5-3 Starting the Burner for Electric Hose (continued)

Step	Action
9	Adjust the temperature dial to the manufacturer's recommended temperature. **Note:** The hose reaches operating temperature in approximately 30 minutes.
10	After the hose reaches the temperature set point, the light in the control box marked "HEATED HOSE" turns off. **Note:** We recommend that you run the hose at the suggested temperature setting.
	Important: The hose must reach 325°F (162.8°C) before dispensing can take place. If the hose does not dispense when the trigger is activated, allow the material to heat longer. If the hose still does not dispense, shut the machine down, locate and remove the plug in the line.
	CAUTION
	DO NOT twist or kink the hose. Avoid sharp bends and continuous twisting by maintaining a minimum 10-inch bend radius. DO NOT use a setting on the hose controller if more than 400°F. DO NOT move or bend the hose when cold: it can cause damage to the hose. DO NOT leave the hose cycling for longer than 30 minutes without dispensing material; coking can occur and permanently damage the hose. DO NOT remove the hose from the boom during operation or kinking will occur.
	Important: It is strongly recommended that the hose be stored in the boom (locked position) when not in use or when in transit. This will prevent twisting or kinking.

©2026 by Crafco All Rights Reserved

5.3 Air Compressor

This unit is equipped with an air compressor, which is designed to assist in the cleaning of debris from cracks and joints.

- Always use approved high-pressure air hoses with properly installed fittings that are not frayed or worn.
- A cold air lance is supplied.
- For the 48300N, the engine RPM will increase to full RPM once the material temperature reaches 275°F (135°C) or if the compressor is switched to the “ON” position.
- If the compressor is not needed, turn off the toggle switch in the control box (labeled compressor).
- The compressor is operated hydraulically and runs continuously. When air is not being discharged, the compressor automatically reduces the air output to a minimum.
- There is an intentional air leak at the air muffler that provides lubrication of the compressor.
- Do not replace the air muffler with aftermarket parts as damage will occur to the compressor.
- The PN48300N is equipped with the 100 CFM compressor and a clean burning diesel engine that reduces power at very high elevations to meet emissions requirements. This machine has been fully tested with all systems active at max load at an elevation of 9200ft with no issues. If you are operating this machine at an elevation above 9200ft, it is possible the reduced engine power required for emissions compliance may not be sufficient to run all systems at max load at the same time. If this occurs, you can run the machine without using the compressor. You can also try running the material tank less than ½ full and allow extra time for melting the material fully – this will reduce the load contributed by the mixer to the engine.
- For PN 48300N is equipped with the 100 CFM air compressor and comes with an air safety shut off valve. In the event of a hose rupture, this valve will significantly reduce the air flow to prevent injuries from a failing hose. This valve will also trigger if the compressor is started without the hose and wand connected. To reset valve, shut off compressor toggle switch for 30 seconds, then turn on the compressor.

©2026 by Crafco All Rights Reserved

Chapter 5 Operating Instructions

5.4 About the Heated Hose, Wand, Valve, and Tip Guard

The Heated Hose

The heated hose supplied with the machine is Teflon-lined with steel over-braid. It has a heating element that runs the length of the hose to heat the material within the hose. The hose is covered with high temperature, durable rubber.

The Wand

The wand has an aluminum tube to protect both the wand and the operator. The pistol grip actuator is equipped with an electric switch, which, when depressed, sends a signal to actuate the pump. The wand is equipped with a trigger lock to prevent accidental pump actuation when it is not pumping material. The trigger must be in the “LOCKED” position at all times except when intentionally pumping material.

The Valve

The wand has a disposable duckbill valve on the end, which shuts off the flow of material when the pump is turned off and prevents excessive dripping of material. This valve also directs the material into a stream for easy application into the crack. Other sealing tips are available. See 10.0 Tools and Accessories for other sealing tips and options.

Tip Guard

The wand has a Tip Guard installed at the factory only when a duckbill is installed. This Tip Guard is not required when using a sealing disk or dripless tip adapter. The purpose of this guard is to prolong the life of the duckbill and to protect the operator in the event of a duckbill failure. Ensure this guard is installed properly before operating equipment. See below.

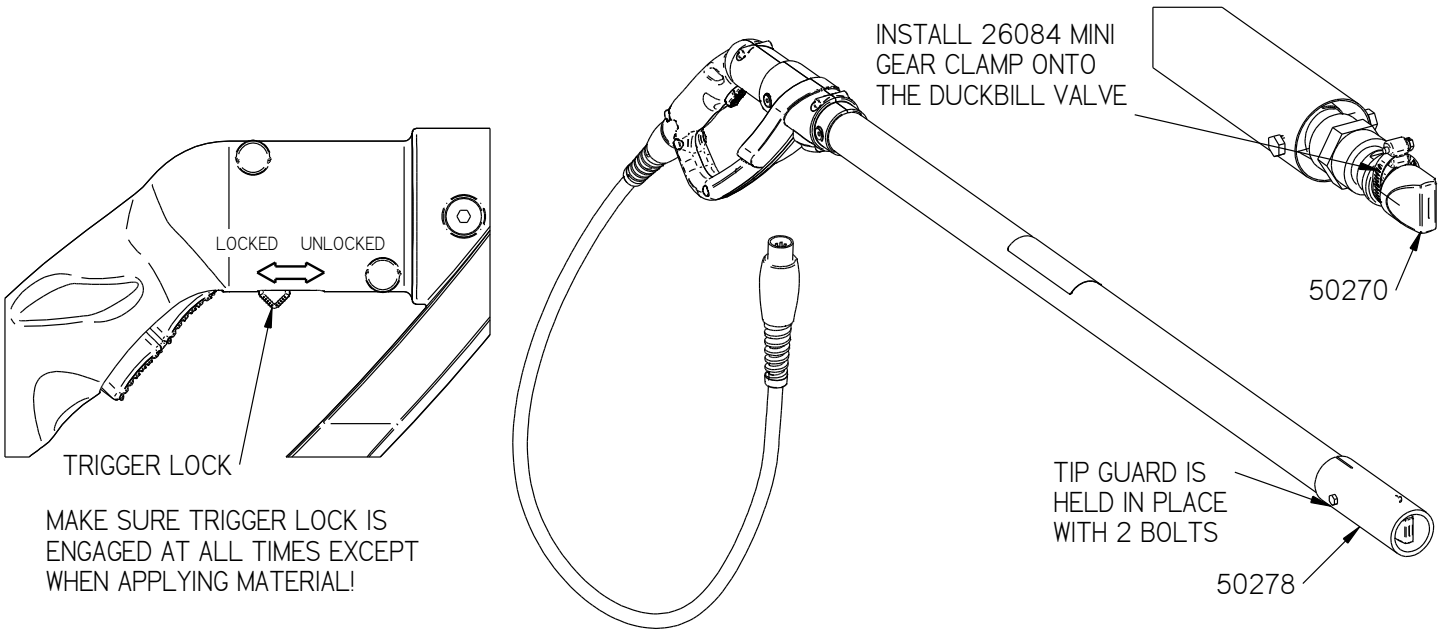

5.5 Operating the Electric Hose

Table 5-4 Operating the Electric Hose

Step	Action
	CAUTION
	Twisting and kinking of the electric hose (used on SS60, SS125, and SS250 Melter) causes the hose to fail; the electric heating wires are shorted out to the metal hose cover and the hose stops heating. **Note:** This type of failure is not covered under the Crafco warranty.
1	Set the hose temperature at 380°F, or manufacturer recommended operating temperature.
2	Allow the hose to be turned on and heating for a minimum of 30 minutes.
3	Make sure the hose swivel between the hose and wand moves freely. **Note:** Do not twist or bend hose over sharp edges such as the edge of the frame or tank. Crafco recommends you do not work directly under the boom; this may cause damage to the hose.
4	Follow all machine instructions in this manual.

©2026 by Crafco All Rights Reserved

Chapter 5 Operating Instructions

5.6 Dispensing the Material

Table 5-5 Dispensing the Material

Step	Action
	WARNING
	Put on protective clothing, gloves, hard-soled shoes, and face shield or safety glasses when operating or filling this machine. Read the entire manual before operating the machine. Never point the wand at any part of your body or at any other person. Hot materials can cause severe burns.
	Important: Some difficulty may be encountered when starting up on cold days. Although the wand is designed to heat the material all the way down to the tip, on cold days you can place the tip of the wand into the shoebox to facilitate material melting in the valve. Insert the wand tip for only a short time before proceeding.
1	Allow the material to reach 380°F (139.3°C) and the hose to reach 380°F (139.3°C); or proper operating temperatures.
2	Turn the pump speed control to the lowest setting by turning the speed control knob fully clockwise.
3	With the wand tip inserted in the shoebox on top of the melter, depress the trigger on the wand and slowly increase the pump speed by turning the speed control knob counterclockwise until the pump motor starts to turn and material flows from the tip of the duckbill valve.
4	Adjust the pump speed to the desired rate of flow.
5	Dispense the material as required. Note: The rate of flow can be varied while the pump is running by rotating the control knob.

5.7 About the Active Screen Pump Protection

The pump is completely encircled by a protective screen. The screen prevents anything larger than ½ inch (1.27 cm) in size to pass from the sealant tank into the pump suction port. The screen continuously rotates 360 degrees around the pump whenever the sealant agitator is engaged. The active screen protects the pump from foreign object damage and self-cleans as it rotates around the sealant pump and suction port.

©2026 by Crafco All Rights Reserved

5.8 Loading Material into the Sealant Tank

This unit is equipped with a safety interlock system on the loading door. This system disables the mixer hydraulic system when the lid is open. This is a safety feature for the operator and should never be disabled for any reason.

WARNING
Personal injury could occur if this safety system is disabled.

Table 5-6 Loading Material into the Sealant Tank

Step	Action
	WARNING Following this procedure prevents hot material from getting on operators and causing severe burns. Never throw blocks of material directly into tank. Hot material splash hazard will result.
1	To load material into the sealant tank first open the lid. For approximate material volume see Table 5-7 Material Tank Depth Chart
2	Place the solid material on the lid then close the lid.
3	Continue adding solid material at intervals to allow the mixer to rotate without jamming. **Note:** If blocks of solid material are added too quickly, jamming results and slows down the melting process.
	Note: When sealant placement volume is low, or the crew has stopped working for lunch, hot oil and material temperatures can equalize. To lower material temperature add a few blocks of cold sealant. This may not be an option if the tank is full.

©2026 by Crafco All Rights Reserved

5.8.1 Material Tank Depth Chart

Table 5-7 Material Tank Depth Chart

DEPTH OF MATERIAL TANK (INCHES)	CAPACITY IN GALLONS BOTTOM UP	CAPACITY IN LITERS BOTTOM UP	CAPACITY IN GALLONS TOP DOWN	CAPACITY IN LITERS TOP DOWN
1	4.65	17.60	127.87	484.06
2	9.30	35.20	123.22	466.46
3	13.95	52.81	118.57	448.86
4	18.60	70.41	113.92	431.26
5	23.25	88.01	109.27	413.66
6	27.90	105.61	104.62	396.06
7	32.55	123.22	99.97	378.46
8	37.20	140.82	95.32	360.86
9	41.85	158.42	90.67	343.26
10	46.50	176.02	86.02	325.66
11	51.15	193.62	81.37	308.06
12	55.80	211.23	76.72	290.46
13	60.45	228.83	72.07	272.86
14	65.10	246.43	67.42	255.26
15	69.75	264.03	62.77	237.66
16	74.40	281.63	58.12	220.06
17	79.05	299.24	53.47	202.46
18	83.70	316.84	48.82	184.86
19	88.35	334.44	44.17	167.26
20	93.00	352.04	39.52	149.66
21	97.65	369.65	34.87	132.06
22	102.30	387.25	30.22	114.46
23	106.95	404.85	25.57	96.86
24	111.60	422.45	20.92	79.26
25	116.25	440.05	16.27	61.66
26	120.90	457.66	11.62	44.06
27	125.55	475.26	6.97	26.46
28	130.20	492.86	2.32	8.86
28.5	132.52	501.66	0	0.00

©2026 by Crafco All Rights Reserved

5.9 Shutting Down and Cleaning Out the Machine

Table 5-8 Shutting Down and Cleaning Out the Machine

Step	Action
	CAUTION
	When shutting down the machine for the day, Crafco recommends leaving the melter about half full with material. This will give a fairly rapid heat up rate in the morning, but allows enough material to start dispensing right away when the material becomes molten.
1	Leaving the hose in the boom, swing the boom toward the front of the machine and lock the boom into position with the latch provided.
	CAUTION
	DO NOT kink or twist the hose or permanent damage may result.
2	Place the wand in the wand holder and lock the wand into position with the latch provided.
3	Place the hose in the hose guide and secure with the Velcro straps.
4	Reverse the pump approximately 30 more seconds.
5	Turn the mixer toggle switch to the “CENTER” position.
5	Turn the burner toggle switch to the “OFF” position.
6	Stop the engine by pressing the “OFF” button on the engine controller. The engine will go into an “IDLE COOL” for ten seconds and then the engine will shut down and stop.
7	Turn the “MAIN POWER” switch to the “OFF” position.

©2026 by Crafco All Rights Reserved

5.10 Storing the Electric Hose for Transport

Table 5-9 Hose for Transport Instructions

Step	Action
1	Leave the hose in the boom, swing the boom toward the front of the machine and lock the boom into position with the latch provided.
2	Place the wand in the wand holder and lock the wand into position with the latch provided.
3	Place the hose in the hose guide and secure with the Velcro strap.
	CAUTION
	Hose damage occurs if: The hose is bent or moved when cold. The hose is twisted or bent at a sharp radius. The hose is moved before being heated a minimum of 30 minutes and set at 380°F. The operator crosses over or under the hose causing the wires between the hose and wand connection to twist or wrap up. The swivel is cold and is not flexible which can cause the hose to twist. The wiring between the hose and the wand is pulled, stressed, or used to support the wand.

©2026 by Crafco All Rights Reserved

5.11 Overnight Heater Use

An overnight heater rod is available as an option. 24190 110V and 24194 220V. The overnight heater may be used to maintain an overnight heat transfer oil temperature of approximately 200-250°F (93.3°C)

Table 5-10 Overnight Heater Use

Step	Action
	WARNING
	The overnight heaters are for overnight use only. If the overnight heater is used, the material must be dispensed the next day. If the material can't be dispensed, the machine needs to be heated to mixing temperatures, and agitated to prevent settling. If you don't dispense the material after 1 nights use, you risk damaging the material and possibly the machine due to settled material, which can harden in the bottom of the material tank
1	Attach the heater power cord to a suitable extension cord.
2	Attach the extension cord to its own outlet rated for 15 amps minimum.
	WARNING
	Suitable extension cord size requirements for **110 Volt** use: 25-50 FT • 16-20 Amps • 12 Gauge (Heavy Duty) or 10 Gauge (Extra Heavy Duty) 100 FT • 16-20 Amps • 10 Gauge (Extra Heavy Duty) Suitable extension cord size requirements for **220 Volt** use: 25-50 FT • 8-10 Amps • 14 Gauge (Medium Duty) or 12 Gauge (Heavy Duty) 100 FT • 8-10 Amps • 12 Gauge (Heavy Duty) **Failure to use the correct size extension cord could result in damage and possible fire!**
3	Disconnect the heater when using the machine's burner system.
	CAUTION
	Do not use the heater without heat transfer oil in the tank. Doing so will overheat and damage the heater, and it will have to be replaced.

5.12 Mounting a Skid Machine

Table 5-11 Mounting a Skid Machine

Step	Action
	WARNING
	The truck needs to be of proper size to hold the loaded weight and size of the machine and any extra material to be carried. The center of gravity of the loaded machine should be above or in front of the rear main axle. Contact Crafco for help in determining the location of the center of gravity of your machine before mounting. Helmet, gloves, safety glasses, and safety shoes must be worn when mounting a skid machine.
	WARNING
	Adequate equipment and lifting devices with sufficient capacity must be used to raise and move the machine from the bottom frame/skid tubes of the machine for loading purposes. Do not use lugs on top of tank for lifting purposes.
	WARNING
	Only mount the unit to a metal truck bed or any other non-flammable surface that can support the weight of the machine. **Failure to use the correct mounting surface could result in damage and possible fire!**
	WARNING
	Mount the machine a minimum of 3” (76mm) above the truck bed. Depending on the machine and airflow, you may have to mount it higher to prevent excessive temperatures on the machine and truck bed.
1	Mount with four ½” diameter Grade 5 bolts (or 12mm Grade 10.9) minimum, using the loading tubes at each corner of the machine to secure it in place.
	WARNING
	Leave 15” (381mm) clearance around the machine. Keep this area clear of any flammable material such as empty sealant boxes. **Failure to keep this area clear could result in damage and possible fire!**

TYPICAL SKID MOUNT GUIDELINES

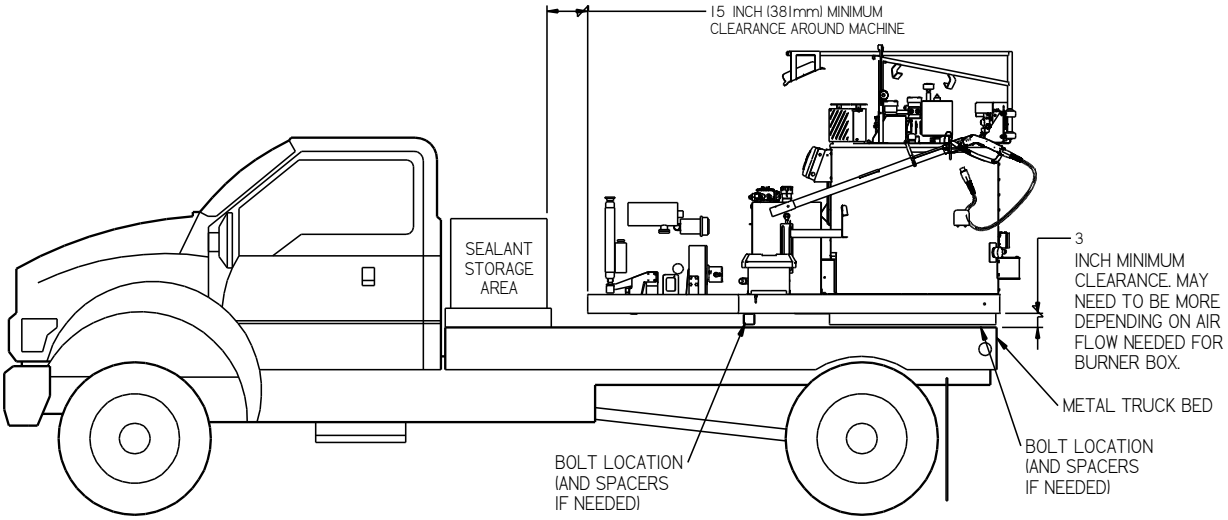

5.13 Shot Timer Option

This option is used to place marker adhesive on the road surface for raised reflective markers. This option will allow you to place the same shot size of material each time you pull the wand trigger. The steps listed below will tell you how to operate the shot timer option.

Table 5-12 Shot Timer Option

Step	Action
	WARNING
	Put on protective clothing, gloves, hard-soled shoes, and face shield or safety glasses when operating or filling this machine. Read the entire manual before operating the machine. Never point the wand at any part of your body or at any other person. Hot materials can cause severe burns.
	Important: Some difficulty may be encountered when starting up on cold days. Although the wand is designed to heat the material all the way down to the tip, on cold days you can place the tip of the wand into the shoebox to facilitate material melting in the valve. Insert the wand tip for only a short time before proceeding.
1	Allow the material to reach 380°F (139.3°C) and the hose to reach 380°F (139.3°C); or proper operating temperatures.
2	Locate the toggle switch inside the trigger control and shot timer box labeled “MODE” is toward the “CRACK SEAL” (It will be near the junction box).
3	Turn the pump speed control to the lowest setting by turning the speed control knob fully clockwise (Located on the boom base).
4	With the wand tip inserted in the shoebox on top of the melter, depress the trigger on the wand and slowly increase the pump speed by turning the speed control knob counterclockwise until the pump motor starts to turn and material flows from the tip of the duckbill valve.
5	Once the material is flowing properly release the wand trigger and change the toggle switch labeled “MODE” to “Marker”.

©2026 by Crafco All Rights Reserved

Table 5-13 Shot Timer Option (continued)

Step	Action
6	Inside this shot timer box is a knob that controls how long the pump stays running each time you pull the trigger (1/4 to 5 seconds). Crafco recommends setting the dial between ¼ and ½ for the shot size.
7	Use the pump speed control to make the final adjustment to the size of the shot needed for the job.
	WARNING
8	While in the "MARKER" mode the material pump turns for the duration of time set by the shot size dial. Once the wand trigger is pulled the pump will not stop until the time expires even if the wand trigger is released.
9	When the material flow stops the system is ready to be started again, release the wand trigger and pull the wand trigger when you are ready for the next shot.
10	At the end of the day use the pump reverse toggle switch located at the rear of the machine. Reverse the material pump for at least 30 seconds. Note: The pump mode does not change the way the pump reverse works.

5.13.1 Shot Timer Troubleshooting Manual

This option comes with an additional manual that covers troubleshooting; electrical schematic and parts break down. Please refer to this additional manual when needed. This manual is part number 38017N Shot Timer and Trigger Control Kit

5.14 Storing the Machine

Store the machine in an area where moisture cannot enter the heating system such as the heat transfer oil tank, etc. Extended down time can cause moisture build up in the heating tank.

Evidence that moisture has collected in the heat transfer oil is a constant popping noise. If this popping noise is heard, warm the heat transfer oil to 300°F (149°C) for two to three hours to evaporate the moisture. Failure to follow this procedure will cause the heat transfer oil to overflow the tank resulting in possible machine damage and/or personal injury.

Best practice is to check in the material tank prior to starting the burner. If water is present, try and remove as much as possible. If the water is not noticed, heat the material to 300°F (149°C) for two to three hours to evaporate the moisture. Failure to follow this procedure will cause the material to overflow the tank resulting in possible machine damage and/or personal injury.

Store the machine for longer periods with the material tank empty.

©2026 by Crafco All Rights Reserved

Chapter 6 Maintenance Instructions

6.0 Maintenance Instructions

This chapter contains all normal maintenance instructions to properly maintain your machine.

6.1 Engine

Refer to the manufacturer's operating and maintenance instructions for the engine.

6.2 Air Compressor

Table 6-1 contains the recommended service intervals for the air compressor, as well as the part numbers for the maintenance kits. Also refer to the manufacturer's operating and maintenance instructions for the air compressor.

Table 6-1 Air Compressor Maintenance Chart

	Hours							
Kit Description	2,500	5,000	7,500	10,000	12,500	15,000	17,500	20,000
45328A Maintenance Kit A, Air filter service kit	X	X	X	X	X	X	X	X
45328B Maintenance Kit B, Oil filter service kit		X		X		X		X
45328C Maintenance Kit C, Separator Service Kit				X				X

6.3 Hydraulic System

Check hydraulic fluid daily. See Table 5-1 Preparing the Machine for Start Up Step 3

Change hydraulic filter every 250 hours of machine operation. Replace if necessary.

Change hydraulic fluid every 500 hours of operation.

6.4 Heat Transfer Oil

Check the oil level at the start of every day. See Table 5-1 Preparing the Machine for Start Up Step 4.

Change the oil every 500 hours of machine operation or 1 year, whichever comes first. Failure to follow this oil change interval will result in machine damage.

6.5 Material Sensor Tube

Check for heat transfer oil in tube every 50 hours of operation. 2 ounces (59.1 ml) required.

©2026 by Crafco All Rights Reserved

6.6 Cleaning Material Tank and Sensor Area

The material tank needs to be cleaned every year, or as needed, for proper operation. As the machine is used, material builds up around the tank walls and sensor guard. The built-up material prevents heat from getting to the fresh material and causes longer heat up times. The built-up material will also prevent the material temperature sensor from reading accurately because it becomes insulated from the fresh material. The coked material needs to be scraped or chipped from the tank walls. The area between the sensor and sensor guard needs to be cleaned also for proper temperature sensing. An air chisel with various sized blades usually works best to break up the material and remove it from the walls. Once the walls and sensor guard areas are cleaned, remove all the loose chunks from the tank, and vacuum out any smaller pieces.

©2026 by Crafco All Rights Reserved

6.7 Temperature Control Calibration

Check the control knob calibration weekly. Calibrate by turning the knob counterclockwise. If the marks do not align, loosen screw in knob and align the line on the control knob with the calibration mark on the scale plate. (See Fig. 6-1 Temperature Control Calibration)

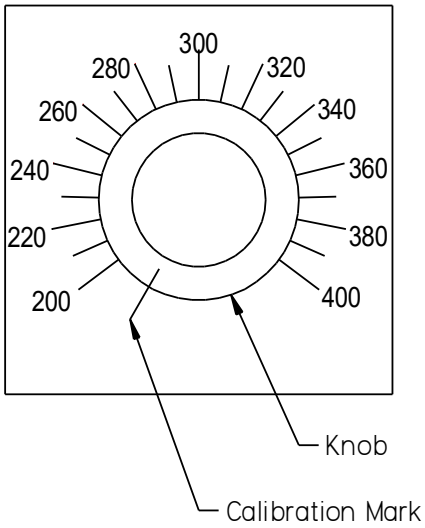

Fig. 6-1 Temperature Control Calibration

6.8 Cleaning the Melter

We recommend using Orange-Sol industrial cleaner for cleaning the exterior of the machine. The cleaner can be found at the following website; https://www.orange-sol.com/industrial-formula/.

©2026 by Crafco All Rights Reserved

6.9 Maintenance Chart

Table 6-2 Maintenance Chart

		Hours			
Possible Cause	Procedure	8	50	250	500
Engine Check Oil Level	Refer to the manufacturer's instructions for the engine	X			
Engine Air Filter(s)	Change the primary filter when restriction indicator says to. See Fig. 9-6 Engine Assembly: PN 48000N				
Engine Radiator	Check and clean finds with water				X
Other Engine Maintenance	Refer to the manufacturer's operating and maintenance instructions for the engine				
Material Sensor Tube	Check for HTO fluid		X		
	Add	As needed			
Heat Transfer Oil	Check	X			
	Change				X
Hydraulic Oil	Check	X			
	Change				X
Hydraulic Oil Filter	Change			X	
Burner	Check burner box insulation				X
	Clean CAD cell				X
	Check Electrodes				X
	Check Flame Retainer/Head				X
	Replace burner nozzle				X
	Replace fuel filter				X
Air Compressor Oil	Check		X		
	Change	Once a year			
Material Tank	Scrape out built up material in the material tank	Once a year or as needed			
Material Sensor Guard	Scrape out built up material around guard				X
Flex Boom Bearings	Grease using a good grade of bearing grease	Once a year			

For a list of parts required for maintenance see Table 6-4 General Maintenance Parts.

6.10 Service Instructions

Table 6-3 Service Instructions

Step	Action
1	Do a general inspection of the machine at least once a week.
2	Replace all worn or damaged parts. **Note:** Keep regular replacement items in stock for emergency repairs to prevent costly downtime. See Table 6-6 Recommended Spare Parts
3	Make necessary adjustments and tighten all loose nuts or screws.
4	Watch for leaks. Tighten fittings or repair as necessary.
5	Clean the external surfaces of the machine at regular intervals. **Note:** Refer to the material manufacturer's instructions for recommendations.
6	Follow the recommended maintenance per Table 6-2 Maintenance Chart

For service, find a list of authorized Distributors and service centers at https://crafco.com/how-to-purchase/

6.11 General Maintenance Parts

Table 6-4 General Maintenance Parts

Legend	
PN 48300N	Super Shot 125 Diesel Melter 70 CFM Air Compressor Skid Mount

Table 6-5 General Maintenance Parts (continued)

48300N		
Quantity	**Description**	**Part No.**
1	Burner Fuel Filter	41867
1	Pre-Fuel Filter	48162N
1	Fuel Filter	48143N
1	Oil Filter	48144N
1	Air Filter	47169N
1	Nozzle, Burner 1.5x80B	41883
1	Hydraulic Oil Filter	45438
Table 6-7	Hydraulic Oil	Table 6-7
Table 6-7	Heat Transfer Oil	Table 6-8

6.12 Recommended Spare Parts

Table 6-6 Recommended Spare Parts

Quantity	Description	Part No.
1	Temperature Controller, Material	51672
1	Temperature Controller, Electric Hose	51691
1	Temperature Controller, Hot Oil	43391
1	DC Controller	42335
1	Coupling, Fuel Pump	41970
1	Burner Nozzle 1.5 X 80B	41883
1	Relay (Crank, Burner and Compressor)	51673
1	Electric Hose, 18’	52405
1	48” Electric Wand	52200

©2026 by Crafco All Rights Reserved

6.13 Recommended Fluids and Lubricants

Table 6-7 Recommended Fluids and Lubricants

48300N		
Application	**Recommended**	**Full Point**
Fuel	Ultra-Low Sulfur Diesel #2 Warm Climate Ultra-Low Sulfur Diesel #1 Cold Climate	30 Gal (113 l)
Engine Oil	Refer to engine manual	4.9 Qt. (4.7 l)
Hydraulic Oil	Shell AW Hydraulic 46	30 Gal (113 l)
Heat Transfer Oil	Shell Turbo T 68 (Group II)	31.2 Gal (118 l)
Air Compressor Oil	Mattei Rotoroil 8000 F2 (Crafco PN 26017)	1.1 Gal (4 l)

©2026 by Crafco All Rights Reserved

6.14 Applicable Brands of Heat Transfer Oil

Table 6-8 Applicable Brand of Heat Transfer Oil

Manufacturer	Product Name	Crafco Heat Transfer Fluid
Chevron	Heat Transfer Oil Grade 46	Shell Turbo T 68 (Group II)
Citgo	Hytherm Oil 46	Shell Turbo T 68 (Group II)
Conoco	Hydroclear Heat Transfer Oil	Shell Turbo T 68 (Group II)
Fina	Vulcan Heat Transfer Oil 46	Shell Turbo T 68 (Group II)
Lubrication Engineers	Heat Transfer Oil	Shell Turbo T 68 (Group II)
Exxon Mobile	Caloria HT 43	Shell Turbo T 68 (Group II)
Mobil	Mobiltherm 43	Shell Turbo T 68 (Group II)
Mobil	Mobiltherm 603	Shell Turbo T 68 (Group II)
Phillips 66	Heat Transfer Oil #3`	Shell Turbo T 68 (Group II)
Phillips 66	Magnus Oil 68	Shell Turbo T 68 (Group II)

CAUTION

The heat transfer oil in this machine is a grade that has been tested and recommended by Crafco Using a grade of oil not specifically recommended by Crafco, is cause for warranties to be voided.

All oils subjected to high temperatures deteriorate with time and lose many of their characteristics. Tests conducted by Crafco have determined that for best results and safety, the heat transfer oil in this machine must be drained and replaced with Crafco recommended oil after five hundred (500) hours of machine operation or one (1) year, whichever occurs first.

6.15 Typical Heat Transfer Oil Specifications

ISO	68
Flash Point, COC	445°F (229.4°C)
Viscosity @ 100°F-SUS	325
Viscosity @ 210°F-SUS	50
Viscosity Index	95-100
Pour Point	0°F (-17.8°C)
Carbon Residue	1%

©2026 by Crafco All Rights Reserved

6.16 Changing the Heat Transfer Oil

Table 6-9 Changing the Heat Transfer Oil

Step	Action
1	To facilitate easier draining of the heat transfer oil, heat the oil to approximately 100°F (38°C).
	WARNING
	Wear proper PPE (safety glasses, face shield, gloves, long sleeve shirt) to prevent bodily injury while servicing the heat transfer oil.
2	Locate the heat transfer oil drain plug on the underside of the melter directly below the material tank. See Fig. 6-2 Heat Transfer Oil Drain and Fill Ports
3	Remove the pipe cap from the drainpipe with a pipe wrench and allow the oil to drain into an appropriately sized container. **Note:** It may be necessary to use a second wrench to keep the drainpipe from turning.
4	If oil fails to drain from the tank, this may be an indication that the oil has crystalized (coked up) inside of the drainpipe. Use a long screwdriver or steel rod to break up the hardened material from the drainpipe to allow the oil to flow. **Note:** Raise the front of the machine slightly to allow oil to flow towards the drainpipe.
5	As an alternative draining method, a 1/4" schedule 40 pipe attached to an oil pump, can be inserted through the HTO fill port or through the expansion tank where the dipstick is located. The end of the pipe should be cut at a slight angle to prevent blocking of the pipe, so the oil can be pumped out. Make sure the pipe is long enough to go to the bottom of the tank.
6	After the oil has completely drained, replace the pipe cap onto the drainpipe and fill the tank to the correct level on the dipstick with a recommended oil that meets ISO 68 specification. See section 6.14 and 6.15. Also see, Table 5-1 step 4 for checking HTO level.
	CAUTION
	Do not overfill the heat transfer oil tank as the oil expands when heated and may overflow.

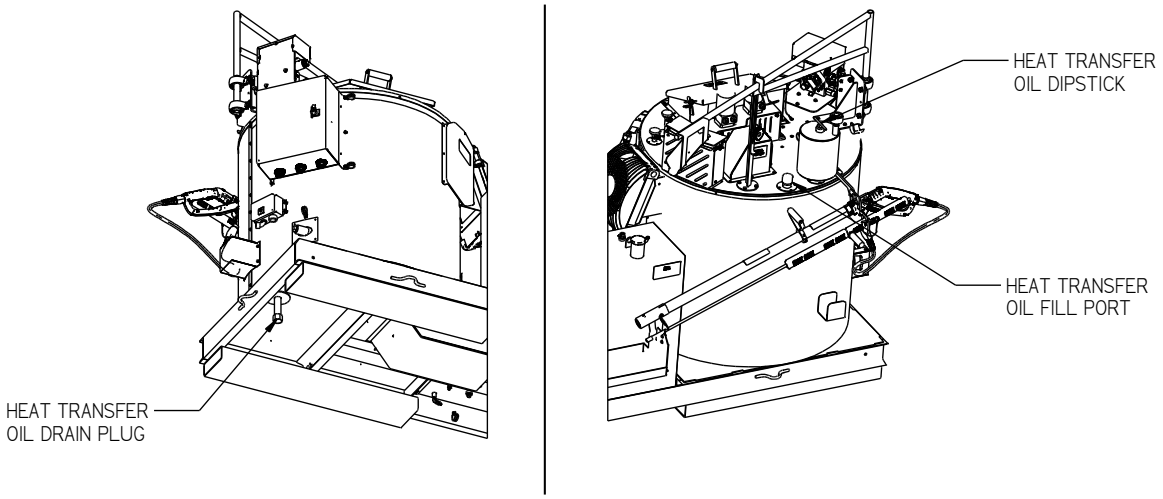

Fig. 6-2 Heat Transfer Oil Drain and Fill Ports

6.17 Material Pump Replacement

Table 6-10 Material Pump Replacement

Step	Action
1	Bring the melter to temperature as preparation to drain the sealant tank.
2	Remove the pipe cap located at the rear of the machine and drain the sealant tank.
	WARNING The material in the sealant tank is extremely hot. Bodily contact with hot sealant can cause severe burns. The high operating temperatures of this machine and the sealant it contains require that protective clothing, gloves, hard-soled shoes, and safety glasses or a face shield be worn at all times by operators of the machine.
3	Remove both guards from the motor mount to access the chain and the sprockets.
4	Rotate both the agitator and pump shafts until the connecting link and set screws are accessible. (See Fig. 6-3 Agitator and Pump Shaft Alignment)

Fig. 6-3 Agitator and Pump Shaft Alignment

©2026 by Crafco All Rights Reserved

Table 6-11 Material Pump Replacement (continued)

Step	Action
5	Disassemble the connecting link and remove the drive chain.
6	Loosen the set screw in the lower coupling half located between the hydraulic motor and the material pump drive shaft.
7	Remove the four (4) hydraulic hoses and put caps on all the ports. **Note**: Mark the hoses for ease of replacement.
8	Remove the four (4) bolts holding the motor mount on top of the melter.
9	Lift off the motor mount and set aside.
10	Remove the pump drive shaft from the center of the agitator shaft.
11	Remove the two (2) bolts holding the agitator shaft bearing. **Note**: Do not remove the bearing from the agitator shaft.

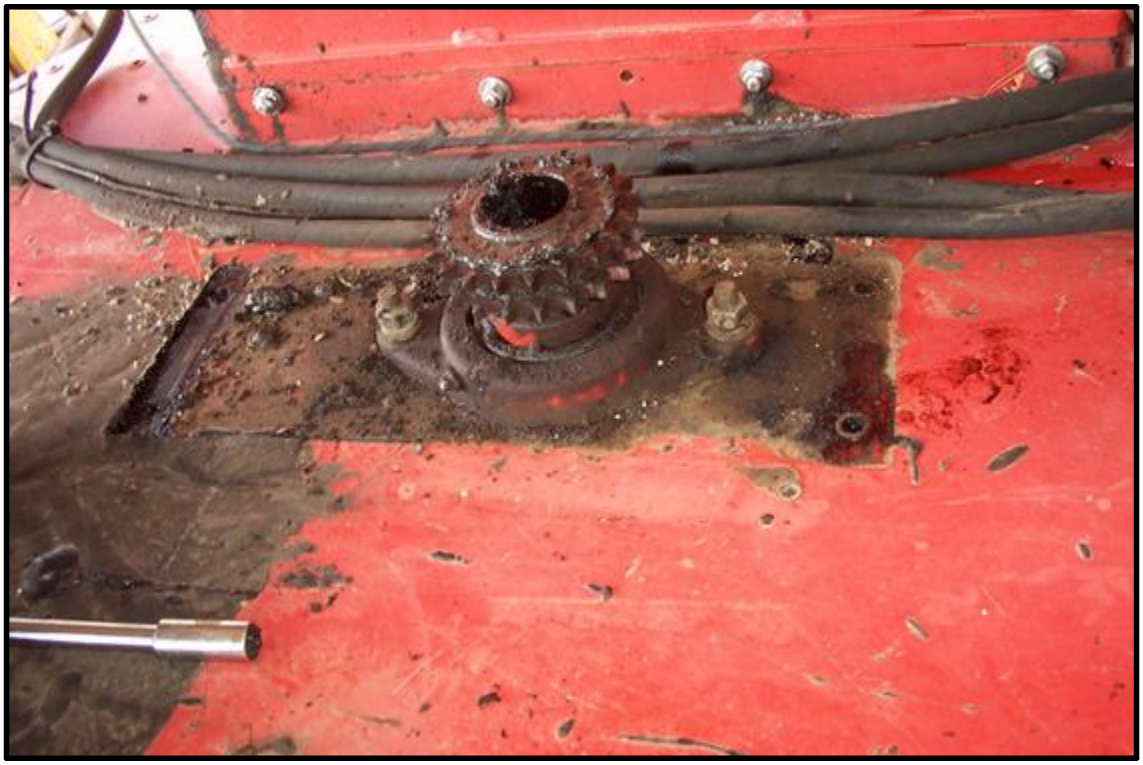

Fig. 6-4 Removal of Motor Mount Assembly

©2026 by Crafco All Rights Reserved

Table 6-12 Material Pump Replacement (continued)

Step	Action
12	When the unit has cooled sufficiently, remove the six (6) bolts holding the paddles on top of the screen.
13	Remove the paddles from the tank.
14	Lift the agitator shaft and screen assembly as high as possible and insert a screwdriver into the shaft hole. **Note**: This will support the assembly while removing the pump from the tank.

Fig. 6-5 Supporting the Agitator Away from the Material Pump

©2026 by Crafco All Rights Reserved

Table 6-13 Material Pump Replacement (continued)

Step	Action
15	Remove the six (6) bolts attaching the pump to the tank. **Note**: A clean pump was used in the figure below for clarity.
16	Lift the pump from the sealant tank.
	WARNING
	Crush Hazard. The pump weighs approximately 90 pounds (40.8 kg). Take precautions not to drop the pump on any part of your body or pinch any part of your body between the pump and another object.

Fig. 6-6 Unbolting the Material Pump

Table 6-14 Material Pump Replacement (continued)

Step	Action
17	Clean any sealant from the top of the pump mounting plate and clean the shaft holes. (See Fig. 6-7 Cleaning of the Pump Mounting Plate)
	CAUTION
	Premature pump wear results if the pump mounting plate and bolt holes are not properly cleaned.

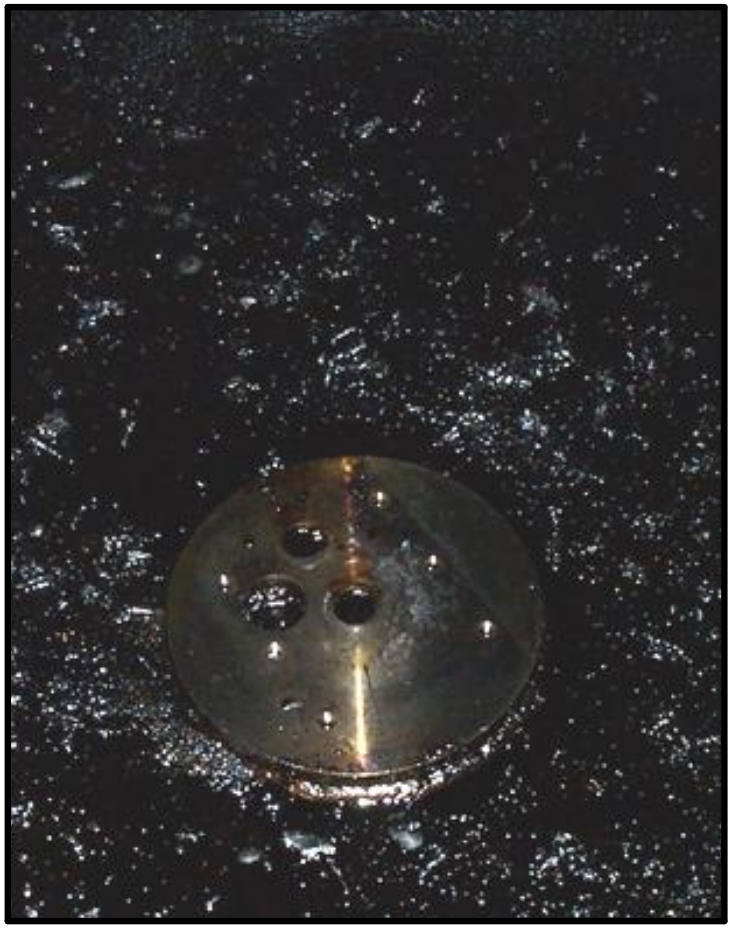

Fig. 6-7 Cleaning of the Pump Mounting Plate

©2026 by Crafco All Rights Reserved

Table 6-15 Material Pump Replacement (continued)

Step	Action
18	Make sure that the pump shaft coupling fits correctly onto the new material pump before mounting the material pump inside the tank. Also make sure the pump spins freely.

Fig. 6-8 Pump Drive Shaft Dry Fit to Material Pump

©2026 by Crafco All Rights Reserved

Table 6-16 Material Pump Replacement (continued)

Step	Action
19	Make sure the 1” material port matches the 1” hole in the pump plate; there should be an alignment pin in the pump plate to insure the correct positioning. Use new hardware to secure the material pump to the pump plate (6) 28739 3/8”-16 x 5” bolt with (6) 28647 3/8” lock washer. Torque these six bolts at 33 lb.-ft. **Note**: Make sure the material pump shaft spins freely after torquing these bolts.

Fig. 6-9 New Material Pump Mounting

Table 6-17 Material Pump Replacement (continued)

Step	Action
20	Crafco recommends that you use a new screen assembly to ensure the agitator and paddles have good threads to secure with, along with new hardware. (See Fig. 6-10 Agitator Shaft and Paddles Mounting)
21	Remove the paddles from the old screen assembly and bolt them to the new screen assembly, using (10) 28760 ½”-13 x 1” bolts with (10) 29065N ½” Nord lock washers. The use of Loctite on the threads before assembling is also recommended. Torque these bolts to 80 lb.-ft.
22	Place the material screen and paddle assembly onto the material pump. Lower the agitator shaft down onto the screen assembly and secure it with (4) 28760 ½”-13 x 1” bolts with (4) 29065N ½” Nord lock washers. The use of Loctite on the threads before assembling is also recommended. Torque these bolts to 80 lb.-ft.

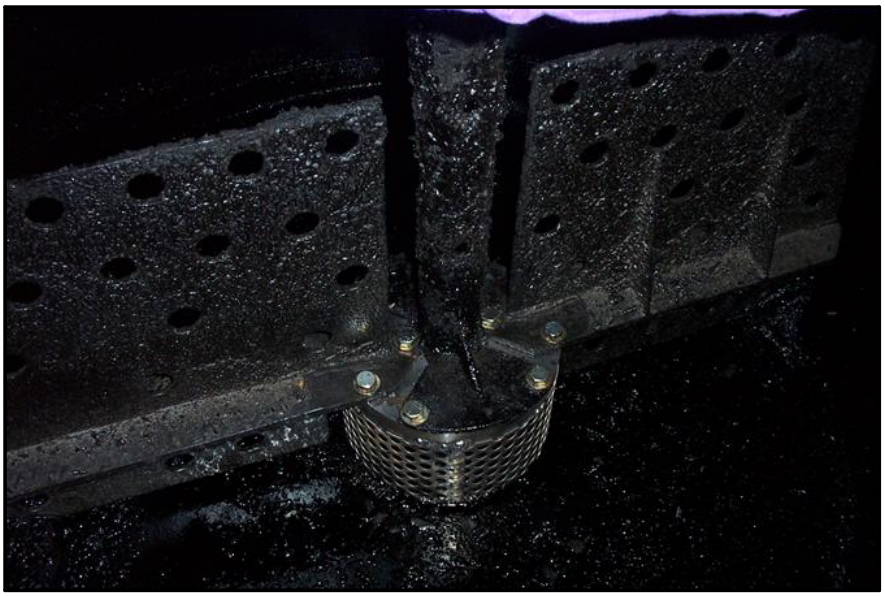

Fig. 6-10 Agitator Shaft and Paddles Mounting

Table 6-18 Material Pump Replacement (continued)

Step	Action
23	Use part number 47970N Washer, Alignment to properly align the shaft inside the agitator shaft. **Note**: This washer may wear out or melt between material pump changes. **Note**: A clean pump drive shaft and agitator shaft was used in the figure below for clarity.

Fig. 6-11 Alignment Washer

Table 6-19 Material Pump Replacement (continued)

Step	Action
24	Secure the agitator bearing using new hardware (2) 28642 ½" grade 8 washers, (2) 28649 ½" lock washer and (2) 28504 ½-13 hex nut. **Note**: Make sure the agitator spins freely at this point.
25	Place the pump shaft into the agitator shaft. You might need to spin the pump shaft to get the keyway in the pump shaft coupling to align with the material pump shaft **Note**: Make sure when the pump shaft spins the material pump spins as well.

Fig. 6-12 Pump Shaft Placement

©2026 by Crafco All Rights Reserved

Table 6-20 Material Pump Replacement (continued)

Step	Action
26	Place the motor mounting bracket back into place, using new hardware (4) 28716 5/16”-18 x 1” bolt and (4) 29063 5/16” Nord lock washer.
27	Slide the pump shaft onto the hydraulic motor shaft and tighten the set screws.

Fig. 6-13 Pump Shaft to Hydraulic Pump Motor Placement

Table 6-21 Material Pump Replacement (continued)

Step	Action
28	Loosen the four bolts holding the agitator hydraulic motor in place and slide it toward the material pump hydraulic motor.
29	Using a new chain assembly, wrap the double chain around both sprockets, with the master link provided with the chain.
30	Insert the master link from below up through the chain assembly first row, then add two spacers, then push the master lick through the second row of the double chain, then add the last spacer and the locking clip.

Fig. 6-14 Agitator Connecting Link

©2026 by Crafco All Rights Reserved

Table 6-22 Material Pump Replacement (continued)

Step	Action
31	Slide the agitator hydraulic motor away from the material pump hydraulic motor to tighten the agitator chain and then tighten the (4) bolts that hold the agitator hydraulic motor in place.
32	Place both chain guards back into place and replace all four of the hydraulic hoses.

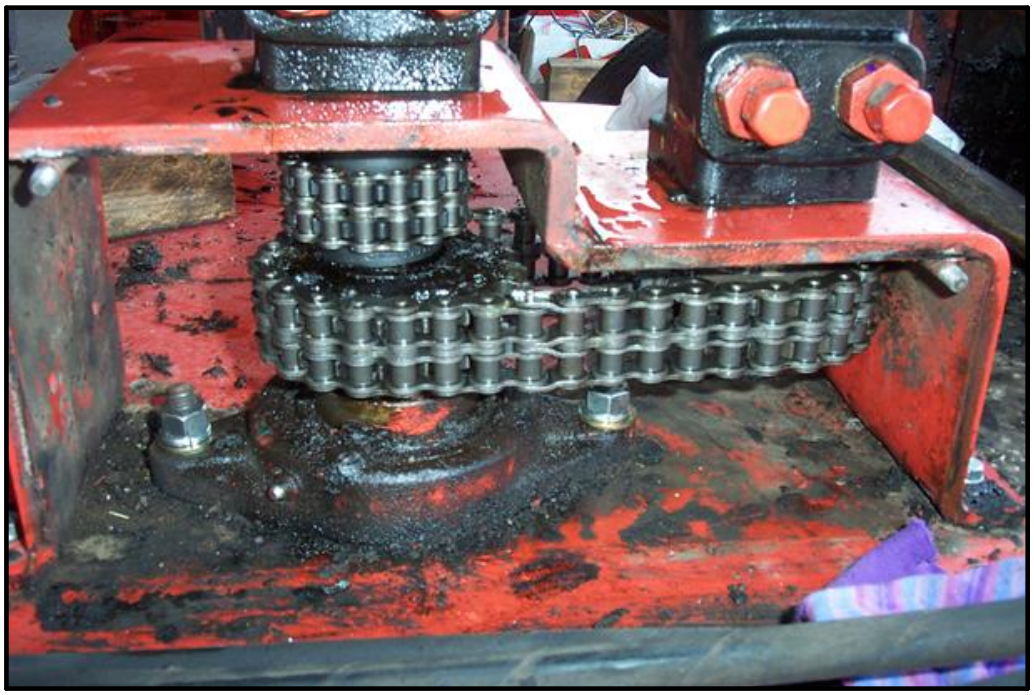

Fig. 6-15 Agitator Chain Tightening Steps

©2026 by Crafco All Rights Reserved

6.18 Flex Boom Adjustment

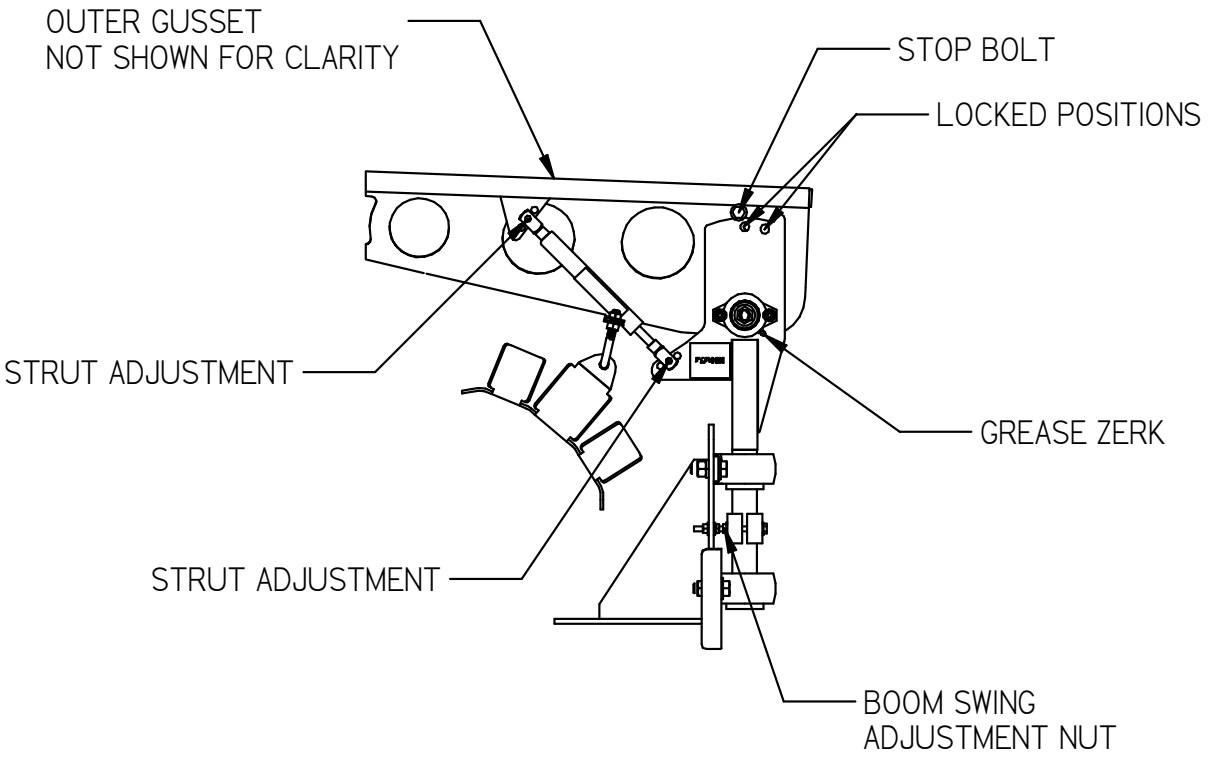

Fig. 6-16 Flex Boom Adjustment

6.18.1 Strut Adjustment

1. Remove the hose from both hose hangers and hose hook to lessen the weight on the boom. Remove the stop bolt hardware, rotate the boom up to allow access to the strut. The strut pin is removed by unclipping the clamp at the base of each end of the strut and then pulling the pin out (the clamp is attached to the pin).
2. The factory set position on the strut is center hole on both ends of the strut. If you desire less force lifting of the flex boom arm, you can move both ends of the strut to the upper position. If you desire more force lifting the flex boom arm, you can move both ends of the strut to the lower position.

6.18.2 Locked Position of the Flex Boom

1. If the strut wears out to the point that the strut no longer lifts the boom, you can move the hardware in the stop bolt position to one of the two locked positions (different boom height) to allow the crew to continue to work until a new strut can be installed.

©2026 by Crafco All Rights Reserved

6.18.3 Grease Zerk

1. For each of the two Flex Boom bearings there is a grease zerk, see maintenance chart for timetable for greasing these bearings.

6.18.4 Boom Swing Adjustment Nut

1. The tension on the boom brake can be adjusted, this will control the side-to-side swing of the Flex Boom. Tighten both nuts to increase the tension and slow the movement, loosen both nuts to decrease the tension and speed up the movement.

©2026 by Crafco All Rights Reserved

6.19 Wand Repair Instructions

The following sections will address how to replace the wand handle, wand cable, switch, and terminal block of the 52200 wand assembly. Actuator, actuator lock, and spring can also be replaced. See Fig. 9-22 Wand Assembly PN 52200 for parts breakdown.

6.19.1 Cable Replacement

1. Disconnect the cable from the electric hose. Lay wand on flat surface with socket head screws facing up.
2. Remove (7) #10-32 x 1" socket head screws and (2) 1/4-20 x 1/2" socket head screws.
3. Carefully remove top handle half. **Caution:** Actuator pin may lift actuator and spring from bottom handle half. Do not lose spring or pin.
4. Remove red and orange wire from switch.
5. Remove green, white, and black wires from terminal block.
6. Remove cable from handle.
7. Replace cable in handle. Note: Look for flats on strain relief of cable that correspond to flats on handle.
8. Install red wire on top of switch (see Fig. 6-17 Switch Wire Location), then install orange wire on (NO) terminal (top rear of switch).
9. Strip green, white, and black wires 3/8" and twist wires strands then install (**Note** white black wire is routed under switch see Fig.6-18 Wire Routing) on open terminals of terminal block. Make sure to install completely under the clamp before tightening screws. Torque screws to 16 in-lbs. Bend all (3) wires over the top of terminal block (see Fig.6-19 Terminal Block Wiring).
10. Replace top wand handle half.
11. Use blue Loctite® on all external handle screws before installation. Install (7) #10-32 x 1" socket head screws hand tight, then install (2) 1/4-20 x 1/2" socket head screws hand tight. Now torque all #10-32 screws to 12 in-lbs. and all 1/4-20 screws to 25 in-lbs.
12. Reconnect cable to electric hose.

6.19.2 Switch Replacement

1. Follow steps 1-4 from 6.19.1 above.
2. Remove (2) #4-40 x 1/2" pan head screws from switch, then remove switch from handle.
3. See Fig.6-20 Actuator Spring Location and Fig.6-21 Actuator / Trigger Assembly for proper assembly of actuator to switch.
4. Replace switch and install (2) #4-40 x 1/2" screws and tighten.
5. Follow Steps 10-12 from 6.19.1 above.

6.19.3 Terminal Block Replacement

1. Follow steps 1-4 from 6.19.1 above.
2. Remove (2) #10-32 x 5/8" round head machine screw from terminal block then remove terminal block from handle.
3. Replace terminal block and install (2) #10-32 x 5/8" screws and tighten.
4. Follow steps 10-12 from 6.19.1 above. If actuator, pin, and spring need to be reinstalled, see Fig.6-20 Actuator Spring Location and Fig.6-21 Actuator / Trigger Assembly.

©2026 by Crafco All Rights Reserved

6.19.4 Wand Handle Replacement

1. Follow steps 1-6 from 6.19.1 above.
2. Remove actuator, actuator lock, pin, and spring.
3. Remove (2) #4-40 x 1/2” pan head screws from switch, then remove switch from handle.
4. Remove (2) #10-32 x 5/8” round head machine screw from terminal block then remove terminal block from handle.
5. Flip wand over and remove the remaining (2) 1/4-20 x 1/2” screws from the handle. Remove handle from wand tube.
6. Install new handle by reversing previous steps.

Fig. 6-17 Switch Wire Location

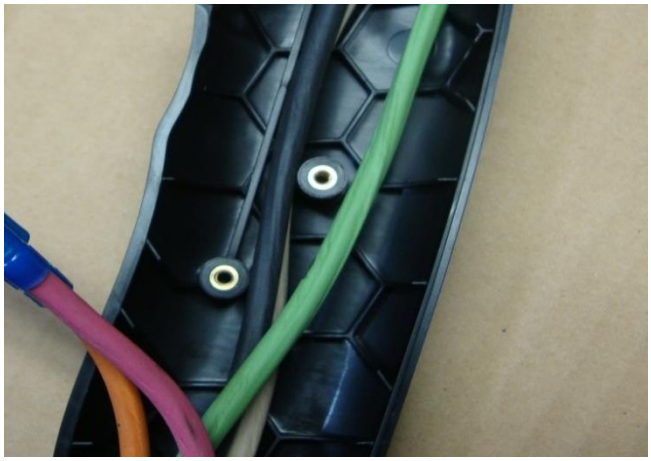

Fig.6-18 Wire Routing

©2026 by Crafco All Rights Reserved

Fig.6-19 Terminal Block Wiring

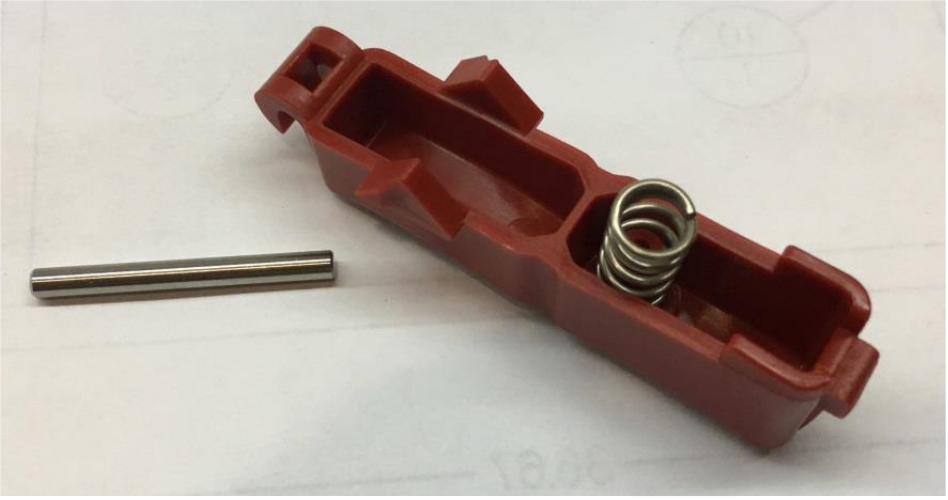

Fig.6-20 Actuator Spring Location

©2026 by Crafco All Rights Reserved

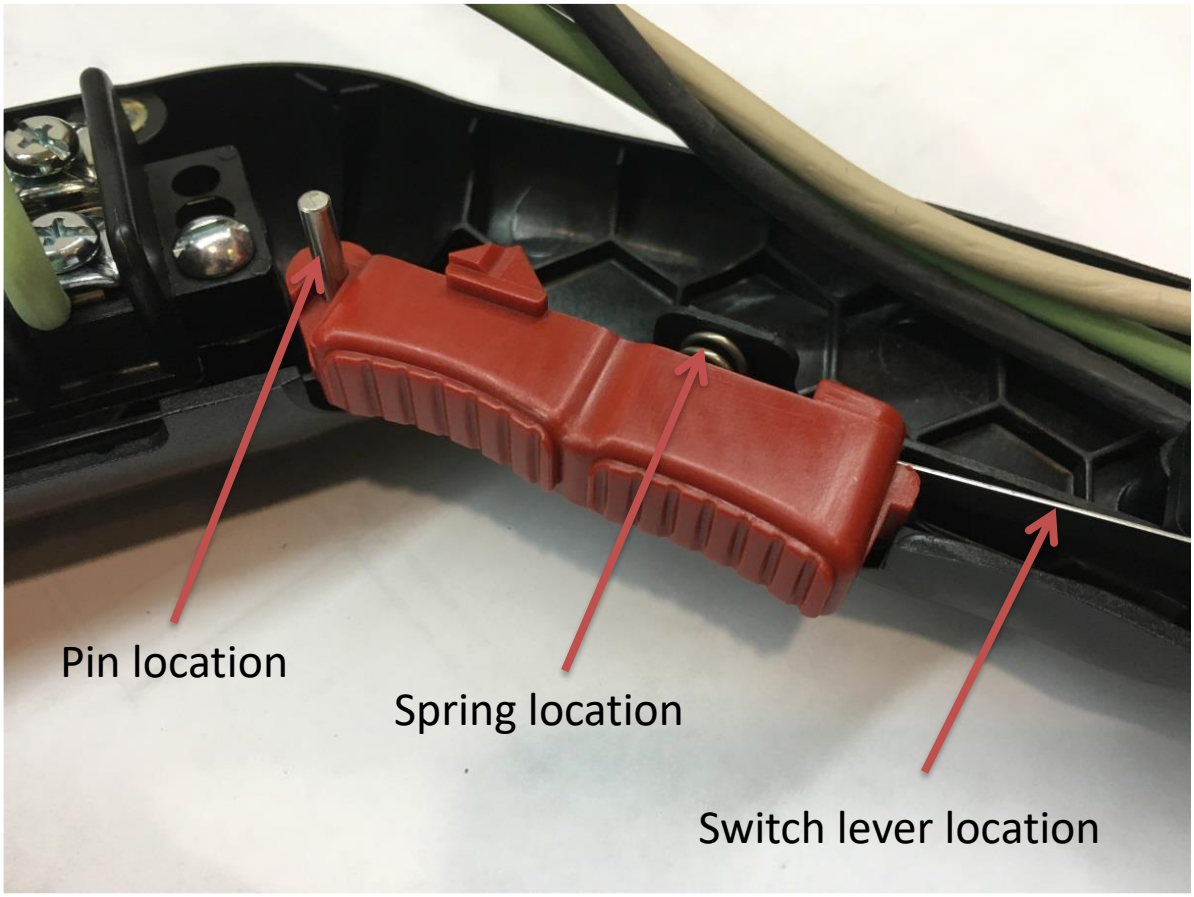

Fig.6-21 Actuator / Trigger Assembly

©2026 by Crafco All Rights Reserved

6.20 Burner Fuel Filter Replacement

For machines that have a separate fuel filter for the burner, follow the steps below to replace the fuel filter.

Table 6-23 Burner Fuel Filter Replacement

Step	Action
1	The machine should be off and cooled to ambient temperature.
2	Place a drain pan below the burner fuel filter assembly.
3	Close the ball valve that is located inline before the burner fuel filter assembly.
4	Unscrew the filter from the assembly using an oil filter or strap style wrench.
5	Screw the new filter into place and tighten by hand.
6	Open the ball valve to allow fuel to flow.
7	Turn on the power key and turn on the main power switch. The burner should self-prime and start. It may take a couple cycles to fill the new fuel filter and bleed the fuel system.
8	Once the burner is running, check for any fuel leaks and tighten the filter if needed.
9	Turn off the main power switch and power key.

©2026 by Crafco All Rights Reserved

Chapter 7 How to Use a Multimeter

7.0 How to Use a Multimeter

Melters use 12-volt direct current (DC) to power the burner, hydraulic valves, and trigger on electric wand. The DC power is from a 12-volt battery.
The electric hose and wand uses 24-volt 3-phase alternating current (AC). The AC power is from the generator which hangs under the radiator. This system has no reference to ground so there is no possibility of electrical shock unless you are between 2 of the phases. NOTE: ONLY CHECK AMPERAGE ON A HOSE WITH A CLAMP-ON AMP METER. (See Fig. 7-2 Clamp – On Amp Meter/Multimeter)

12-volt DC power has little danger of electrical shock. Care must still be taken when dealing with DC power systems because it is capable of producing large amounts of current.

7.1 Checking DC Voltage with a Multimeter

Connect the probes to the meter.
Set the range to a position that includes 12-volts or higher.
Touch the red probe to the positive side of accessory and black probe to ground. If the item you are checking has a ground wire attached then use that ground or you can use a non-painted surface on the frame.

7.2 Checking AC Voltage with Multimeter

Connect the probes to the meter (See Fig. 7-1 Standard Multimeter).
Set range to a position that includes 24-volts or higher.
There are three steps to test the generator voltage. All 3 values should be in the range of 24-30 volts AC.

- Touch red probe to the white wire of the generator and the black probe to the green wire of the generator.
- Next move black probe to black wire.
- Then move red probe to green wire.

7.3 Checking Resistance (Ohms)

Connect probes to the meter (See Fig. 7-1 Standard Multimeter).
Note: When checking Ohms the circuit cannot be completed. This means one end of the wire will need to be disconnected.

7.3.1 How to Check Wire Continuity

Set the meter to “Audible Continuity”.
Now touch the probe to each end of the wire in question. The meter will read less than “1.0” ohms on the screen and make an audible beep if the wire has continuity from end to end.

7.3.2 How to Check RTD Sensor

Set to dial Ohms Ω. If your meter has different ranges set to 2K or 2000 ohm range.
Touch one probe to each screw or wire of the sensor. The meter will read X.XX if in the 2K range or XXX.X if in the 2000 range.

©2026 by Crafco All Rights Reserved

Chapter 7 How to Use a Multimeter

7.4 Checking Amperage

The Multimeter can be used to check amperages under 10 amps in AC or DC current.
When checking the amperage of the electric hose **always use a clamp-on amp meter**. (See Fig. 7-2 Clamp – On Amp Meter/Multimeter) The amperage in the hose can reach as high as 35 amps. Clamp the meter around one wire at a time. Remember most clamp-on meters do not work on DC current.

Fig. 7-1 Standard Multimeter

Chapter 7 How to Use a Multimeter

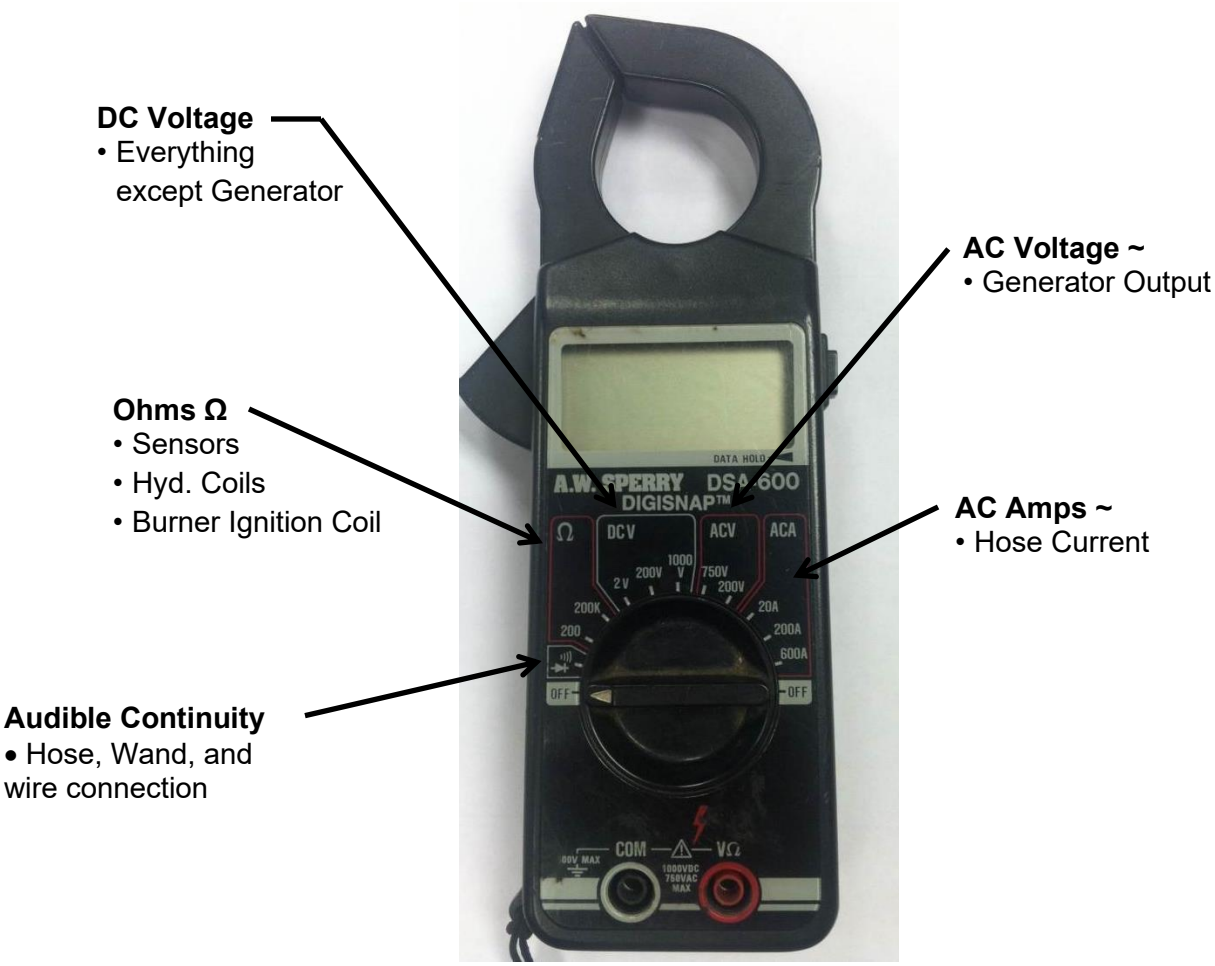

Fig. 7-2 Clamp – On Amp Meter/Multimeter

Chapter 8 Troubleshooting

8.0 Troubleshooting
8.1 Diesel Burner Troubleshooting
8.1.1 Symptoms: Burner will Not Ignite

Table 8-1 Basic Visual Troubleshooting

Step	Possible Cause	If . . .
1	Is the engine running? **NOTE**: You can troubleshoot the burner without the engine running, but you must connect a battery charger to the battery and the ignition must be in the “ON” position	• Yes, go to Step 2. • No, start the engine.
2	Is the “POWER” toggle switch in the “ON” position?	• Yes, go to Step3. • No, turn the toggle switch to the “ON” position.
3	Is the red "Burner" light "ON"?	• Yes, go to Step 6. • No, go to Step 4
4	Are both the Material and Hot Oil temperature dials set above the current temperatures?	• Yes, go to Step 4. • No, set the Material temperature according to the type of material you are using and the Hot Oil 100°F above the Material set point.
5	Does either readout display a -1? **NOTE:** This occurs only when there is a short in the sensor circuit.	• Yes, this indicates a short in the circuit. Check the RTD sensor for water under the cap causing a short. Also look for worn wires possibly shorting to frame between sensor and control box. No, go to step 5a.
5a	Does either readout display a 1? **NOTE:** This occurs only when the sensor circuit is not completed.	• Yes, this indicates a break in one or both sensor wires between the RTD sensor and the PAKSTAT. Check for broken wires between senor and PAKSTAT. No, go to Step 6.
6	Is the circuit breaker tripped?	• Yes, reset by pushing in the button that popped out. • No go to Step 7.
7	Is the fuel level low or empty?	• Yes, fill with diesel fuel • No go to Step 8.

©2026 by Crafco All Rights Reserved

Table 8-2 Basic Visual Troubleshooting (continued)

Step	Possible Cause	If . . .
8	Is there smoke coming out of the exhaust stack?	• Yes, go to Table 8-8 Smoke Coming Out of Exhaust Stack. • No, go to Step 9.
9	Is your burner working properly, but it seems like it takes a lot longer to reach operating temperature?	Yes, go to Table 8-13 Sealant is Heating Slowly. • No, Call Crafco and speak to a customer service technician.

8.1.2 Burner Electrical Troubleshooting

Note: Use Fig. 8-1 Diesel Burner Schematic while troubleshooting the burner electrical system.

.

Table 8-3 Burner Electrical Troubleshooting

Step	Possible Cause	If . . .
1	Is there 12Vdc between the “YEL-CHI-E” and “BLK” wires at the burner plug?	• Yes, go to Step 11. • No, go to Step 2.
2	Is there 12Vdc between the “YEL-CHI-E” “87” wire on the burner relay in the control box and the “BLK-2” “86” wire on the relay?	• Yes, check for poor connection or broken wire between the burner relay in the control box and the plug on the burner. • No, go to Step 3.
3	Is there 12Vdc between “WHT/RED-1” “85” wire on the burner relay in the control box and the “BLK-2” “86” wire on the relay?	• Yes, go to Step 6. • No, go to Step 4.
4	Is there 12Vdc between “WHT/RED-1” wire on the burner reset toggle switch and nearby ground source?	• Yes, check for poor connection or broken wire between the burner relay in the control box and the burner reset switch. • No, go to Step 5.
5	Is there 12Vdc between “ORN-1” wire on the burner reset toggle switch and nearby ground source?	• Yes, go to Step 4. • No, Is the burner toggle switch in the “ON” position? If yes, then replace the burner reset switch.

Table 8-4 Burner Electrical Troubleshooting (continued)

Step	Possible Cause	If . . .
6	Is there 12Vdc between burner relay “RED-CH1-D” “30” wire and “BLK-10” “86” on the same relay?	• Yes, replace the burner relay. • No, go to Step 7.
7	Is there 12Vdc between the circuit breaker (located under the battery tray) “RED-CH1-D” wire and the ground lug on the battery tray?	• Yes, inspect the wire harness between the circuit breaker and the control box, also check the pins and sockets in the connectors at the bottom of the control box, for any damage, or pushed back and not making good connection. • No, go to Step 8.
8	Is there 12Vdc between the circuit breaker (red wire going to battery positive cable) and the ground lug on the battery tray?	• Yes, wait 15 seconds then repeat Step 7. If still no voltage on Step 7 then replace circuit breaker. • No, go to step 9.
9	Check for loose or broken wires between circuit breaker and battery positive cable.	• Yes, replace or repair damaged wire and repeat Step 8. • No, go to step 10.
10	Is there 12Vdc between the positive and negative battery post? If this check is done while the engine is running the reading should be 13.8 volts.	• Yes, then there should be 12Vdc on the battery side of the circuit breaker. • No, replace battery. • **Note**: If the reading is less than 13.8 volts while the engine is running the alternator needs to be rebuilt or replaced.
11	Is there 12Vdc between the “GRN-CH1-S” wire in the burner plug and the “BLK” wire in the burner plug?	• Yes, go to Table 8-10 Testing the DC Controller • No, go to Step 12.
12	Is there 12Vdc between terminal #7 “GRN-CH1-S” on hot oil PAKSTAT and terminal #5 “BLK-1” wire of the oil PAKSTAT?	• Yes, check for loose or broken wires between burner plug and PAKSTAT. • No, go to Step 13.
13	Is there 12Vdc between terminal #6 “GRY-1” on hot oil PAKSTAT and terminal #5 “BLK-2” wire of the oil PAKSTAT	• Yes, make sure the temperature readout for the hot oil is below the set point, if so, then replace hot oil PAKSTAT. • No, go to Step 14.

©2026 by Crafco All Rights Reserved

Table 8-5 Burner Electrical Troubleshooting (continued)

Step	Possible Cause	If . . .
14	Is there 12Vdc between terminal #4 “GRY-1” wire on the material PAKSTAT and terminal #8 “BLK-2” wire of the material PAKSTAT	• Yes, check for loose or broken wires between hot oil PAKSTAT and the material PAKSTAT. • No, go to Step 15.
15	Is there 12Vdc between terminal #3 “ORN-1” wire and terminal #8 “BLK-2” wire of the material PAKSTAT?	• Yes, make sure the temperature readout for the material is below the set point, if so, then replace PAKSTAT. • No, go to Step 16.
16	Is there 12Vdc between terminal #9 “ORN-1” wire and terminal #8 “BLK-2” wire of the material PAKSTAT?	• Yes, check for loose or broken wires between terminal #9 and #3 of material PAKSTAT. • No, go to Step 17.
17	Is there 12Vdc between terminal #1 “ORN-1” wire and terminal #8 “BLK-2” wire of the material PAKSTAT?	• Yes, check for loose or broken wires between terminal #1 and #9 of material PAKSTAT. • No, go to Step 18.
18	Is there 12Vdc between terminal #3 “ORN-1” wire and terminal #5 “BLK-1” wire on hot oil PAKSTAT?	• Yes, check for loose or broken wires between terminal #3 of the hot oil PAKSTAT and terminal block. • No, go to Step 19.
19	Is there 12Vdc between orange supply relay “ORN-1” “87” wire and “BLK-10” “86” on the same relay?	• Yes, check for loose or broken wires between orange supply power relay and terminal #3 of the hot oil PAKSTAT. • No, go to Step 20.
20	Is there 12Vdc between orange supply relay “ORN-10” “85” wire and “BLK-10” “86” on the same relay?	• Yes, check for loose or broken wires between “85 and “86 on the orange supply power relay. • No, go to Step 21.
21	Is there 12Vdc between orange supply relay “FUSE/ORN-CH1-C” “30” wire and “BLK-10” “86” on the same relay?	• Yes, go to Step 23. • No, check the inline fuse, if good then go to Step 22. If bad replace fuse.

Table 8-6 Burner Electrical Troubleshooting (continued)

Step	Possible Cause	If . . .
22	Is there 12Vdc between the circuit breaker (located under the battery tray) “ORN-CH1-C” wire and the ground lug on the battery tray?	• Yes, inspect the wire harness between the circuit breaker and the control box, also check the pins and sockets in the connectors at the bottom of the control box, for any damage, or pushed back and not making good connection. • No, go to Step 7 and repeat that Step.
23	Is there 12Vdc between bottom terminal “ORN-10” wire of burner ON/OFF toggle switch and nearby ground source (black wire)?	• Yes, check for loose or broken wires between top terminal power switch and terminal #3 of the hot oil PAKSTAT. • No, Is the switch in the “ON” position? If yes, then go to Step 24.
24	Is there 12Vdc between middle terminal “RED-3” wire of burner ON/OFF toggle switch and nearby ground source (black wire)?	• Yes, replace the toggle switch. • No, go to Step 25.
25	Is there 12Vdc between crank lock out relay middle terminal “RED-3” “87a” wire and “BLK-EH1” “86” left terminal?	• Yes, go to Step 27. • No, go to Step 26.
26	Is there 12Vdc between crank lock out relay right terminal “TAN-EH4” “85” wire and “BLK-EH1” “86” left terminal? NOTE: this is only true during engine cranking.	• Yes, Is the engine cranking? If yes, retest once the engine stops cranking. • No, make sure the key switch is in the “ON” position.
27	Is there 12Vdc between crank lock out relay bottom terminal “RED-2” “30” wire and “BLK-EH1” “86” left terminal?	• Yes, replace the crank lock out relay. • No, go to Step 28.
28	Is there 12Vdc between the “Main Power Switch” “RED-2” wire and nearby ground source (black wire)?	• Yes, check for loose or broken wires between those two points. • No, Is the key in the “ON” position? If yes, then go to Step 29.
29	Is there 12Vdc between the “Main Power Switch” “RED-1” wire and nearby ground source (black wire)?	• Yes, replace contact block. • No, go to Step 30.

©2026 by Crafco All Rights Reserved

Table 8-7 Burner Electrical Troubleshooting (continued)

Step	Possible Cause	If . . .
30	Is there 12Vdc between top terminal of circuit breaker “RED-1” wire and nearby ground source (black wire)?	• Yes, check for loose or broken wires between top terminal of circuit breaker and bottom terminal (red wire) of power switch. • No, go to Step 31.
31	Is there 12Vdc between bottom terminal of circuit breaker “RED-EHI” wire and nearby ground source (black wire)?	• Yes, push in the reset button on the front panel and recheck Step 30. • No, go to Step 32.
32	Is there 12Vdc between blue wire on starter solenoid and nearby ground source (black wire or bare metal on engine case)?	• Yes, check for loose or broken wire between starter solenoid and ignition switch. • No, go to step 33
33	Check connections and condition of red battery cable.	• Yes, there should be 12Vdc at all previous steps. • No, replace battery cable.

Chapter 8 Troubleshooting

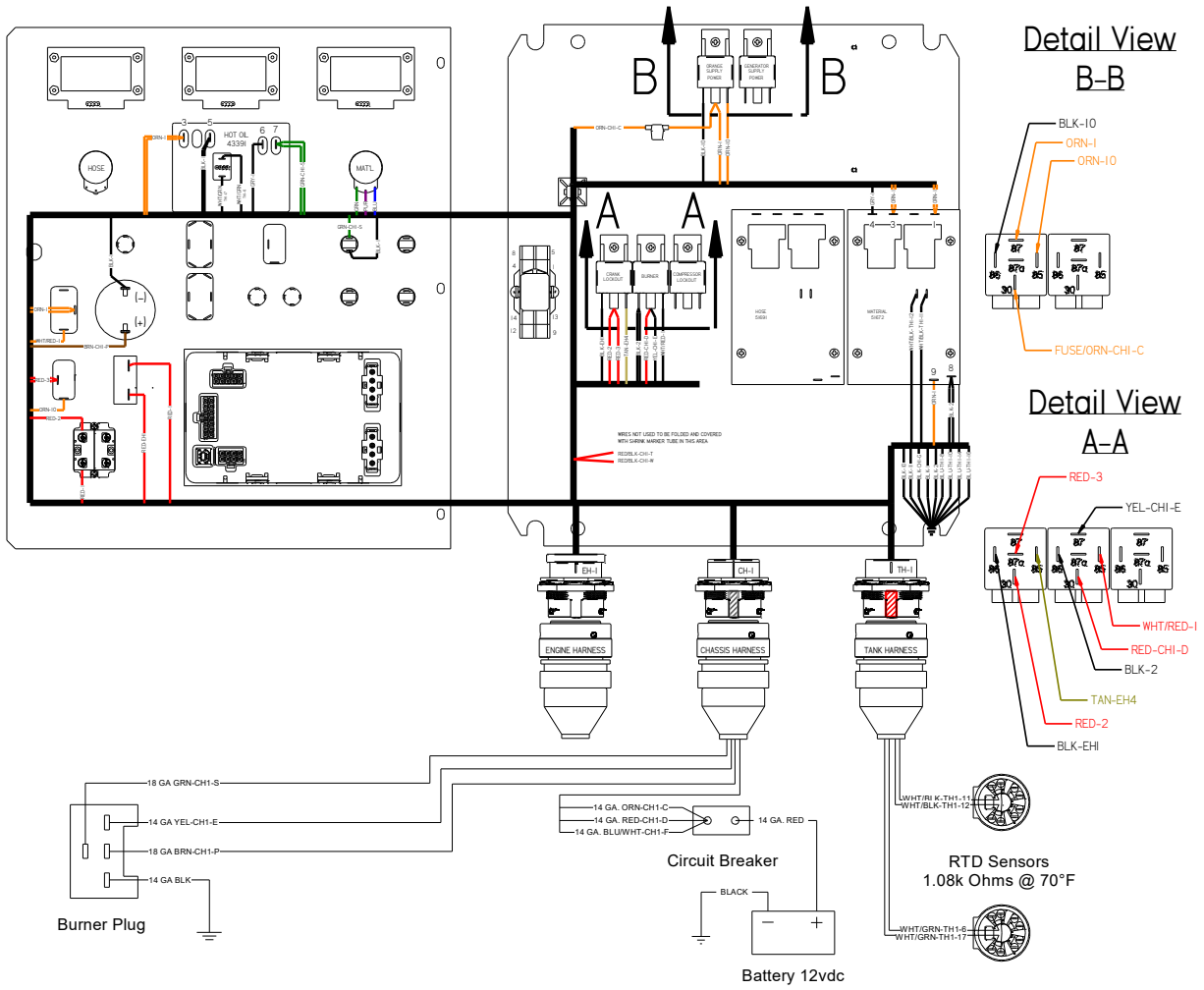

Fig. 8-1 Diesel Burner Schematic

8.1.3 Excessive Smoke Coming Out of Exhaust Stack

Table 8-8 Smoke Coming Out of Exhaust Stack

Step	Smoke Coming Out of the Exhaust Stack
1	White smoke indicates that there is too much air being forced though the burner. Loosen the Air Shutter screw and rotate the Air Shutter counterclockwise to reduce air. Refer to Fig. 8-3 Diesel Burner Air Settings, for the proper air settings and diagram.
2	Black smoke indicates that there is not enough air being forced through the burner. First check the air settings, if more air is required rotate Air Shutter clockwise. Refer to Fig. 8-3 Diesel Burner Air Settings
3	Refer to Fig. 8-3 Diesel Burner Air Settings to locate the following components. Using a 7/16" wrench, remove the copper fuel line nut attached to the nozzle line. Next remove the locking nut for the nozzle tube. Then loosen the locking tabs on the ignition coil and open the ignition coil. Remove the nozzle line assembly.
4	Using Fig. 8-2 Diesel Burner Electrode Adjustment, make sure the electrodes are in the correct position. Loosen the clamp holding the electrodes in place so they can be adjusted. Inspect the porcelain ceramic insulator for any cracks. Also check the tip of each of the electrodes to make sure they still have a sharp point and are not rounded off.
5	If it has been longer than 500 hours since the last time the burner nozzle was replaced, Crafco recommends replacing the burner nozzle at this time.
6	Reassemble the burner, using the reverse order in Step 3.
7	Remove the burner box assembly by removing the four (4) 1/2" bolts, flat washer, lock washer, and nuts holding the burner box onto the trailer.
7a	Make sure the insulation inside the burner box is not soaked with diesel fuel.
7b	If the insulation is soaked with diesel fuel, you will need to replace the insulation.
7c	Reassemble the burner box.

8.1.4 Burner Lights but Shuts Down After 15 Seconds

Table 8-9 Burner Lights but Shuts Down After 15 Seconds

Step	Possible Cause	If . . .
1	Does the CAD EYE have soot or dirt on the lens?	• Yes, clean cad eye lens with a soft cloth. • No, go to Step 2.
2	Are the two yellow wires for the CAD EYE loose or broken?	• Yes, repair or replace as needed. • No, go to Step 3.
3	Is the CAD EYE faulty?	• Yes, replace CAD EYE. • No, call a Crafco service technician.

©2026 by Crafco All Rights Reserved

8.1.5 Testing DC Controller

Table 8-10 Testing the DC Controller

Step	Bench Test DC Controller
1	Remove all wire nuts attaching the DC Controller to the burner.
2	Attach the black ground wire to the negative battery post.
3	Attach the red wire to the positive battery post.
4	Attach the white (Enable) wire to the positive battery post to start the test. (Genesis II Controllers will have a 15-second delay.) • Orange (Blower Motor) wire should have 12Vdc (all the time). • Blue (Igniter) wire should have 12Vdc.
5	Twist the yellow wires together (once voltage registers) on the orange, blue and purple wires. • Orange (Blower Motor) wire should maintain 12Vdc. • Blue (Igniter) wire should lose voltage after 15 seconds. • Purple (Valve) wire should maintain 12Vdc.
6	If any of the above tests fail, replace the DC Controller.

8.1.6 Burner Fuel Solenoid Testing

Table 8-11 Burner Fuel Solenoid Test

Step	Fuel Solenoid Test
1	Remove cord set from fuel solenoid.
2	Check the ohms between the terminals of fuel solenoid.
3	If the reading is between 15-25 ohms the coil is good.
4	If the reading is outside the above range or the meter indicates an open circuit, replace the fuel solenoid.

8.1.7 Burner Ignition Coil Testing

Table 8-12 Burner Ignition Coil Test

Step	Ignition Coil Test
1	Make sure the burner is off. Open the ignition transformer (located above the blower) to expose the springs.
2	Check resistance between each of the springs and the ground (exposed metal on the burner).
3	The meter should read less than 2000 ohms. (Take note of the readings, you will use them in Step 5.)
4	Check resistance between both springs. (Take note of the reading, you will use it in Step 5.)
5	The igniter should be replaced if: • The difference between the two springs to ground resistance readings is greater than 20%. • Or the spring-to-spring resistance does not read approximately twice the spring to ground.

8.1.8 Bleeding the Burner

This compressor unit is plumbed to have the burner be self-priming. Ensure the “Main Power” and “Burner” switch is “ON” and burner fuel pump will start circulating fuel through the fuel lines, which removes all air bubbles automatically, since it has a return line to the fuel tank.

©2026 by Crafco All Rights Reserved

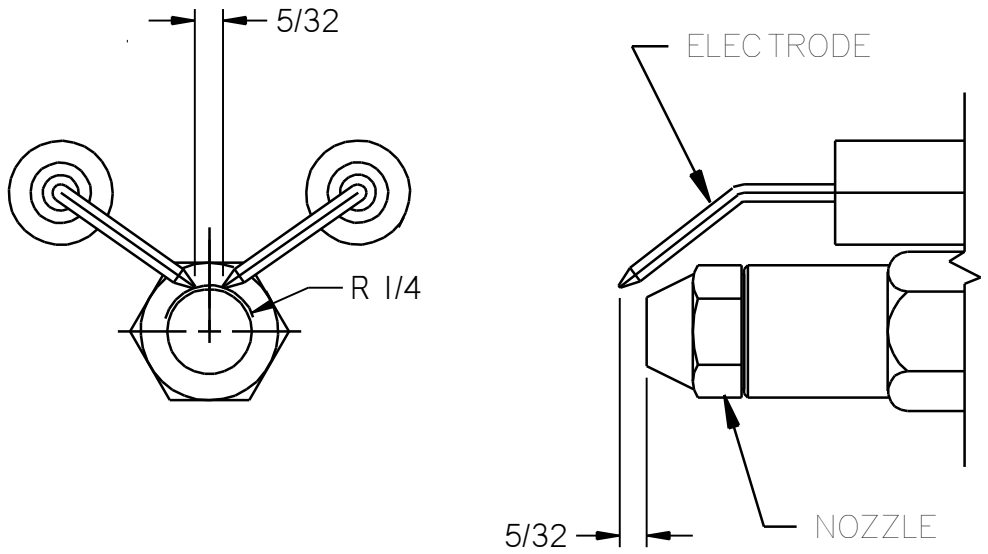

Fig. 8-2 Diesel Burner Electrode Adjustment

Air Shutter = 7
Air Band = 0
Fuel Pressure = 140 PSI
Adjustment Plate = 3

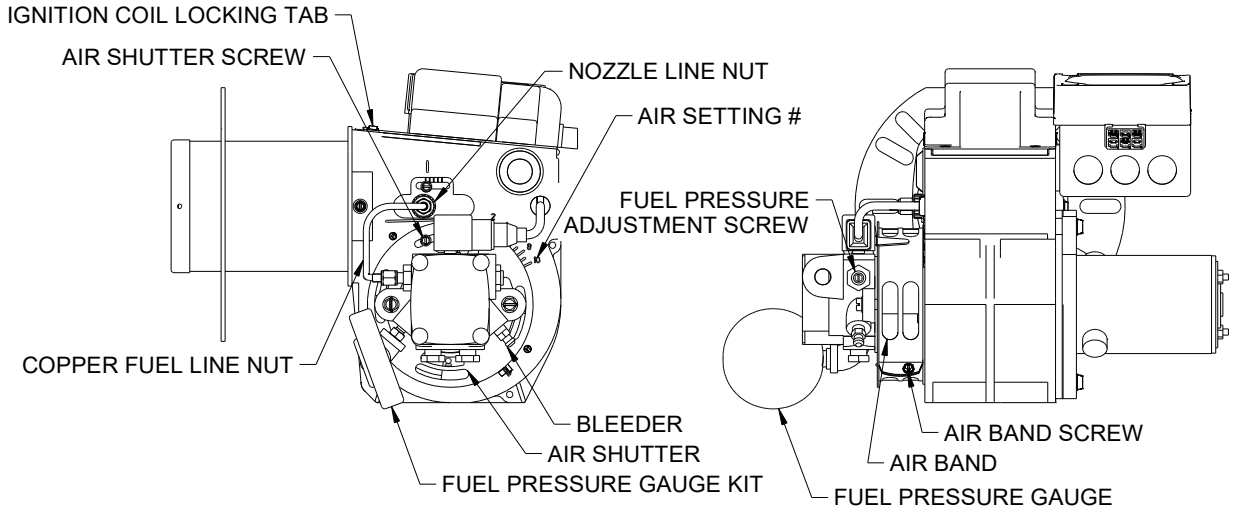

Fig. 8-3 Diesel Burner Air Settings

©2026 by Crafco All Rights Reserved

8.1.9 Sealant is Heating Slowly

Table 8-13 Sealant is Heating Slowly

Step	Sealant is Heating Slowly
1	With the material level half or less, open the loading lid and inspect the inside edge of the material tank. Check if there is a buildup of old, dried out and hardened material along the top half of the material tank.
2	If this is the case, you will need to drain out (use up) the rest of the material inside the tank. When the tank is empty, use an air chisel to remove this built up material. Remove as much as possible all around the tank, including the roof of the material tank. Remove all the old sealant chunks from the bottom of the material tank. This should be done every year or as conditions require.
3	Check your level of the heat transfer oil, the mark on the dipstick is for 70°F.
4	Check your records of the last service replacement of the heat transfer oil. If it has been longer than 500 hours, or one year, you need to change your oil.
5	Many Crafco service centers can perform these service steps for you if you cannot. Call your local service center to find out if they can.

8.2 Mixer Troubleshooting

8.2.1 Symptom: Mixer Does Not Rotate

Table 8-14 Basic Visual Troubleshooting

Step	Possible Cause	If . . .
1	Is the Material Temperature Display at or above 275°F?	• Yes, go to Step 2. • No, continue to allow the machine to heat. (Make sure the Material dial and the Hot Oil dial are set at operating temperatures.)
2	Is the red "Mixer" light "ON"?	• Yes, go to Step 3. • No, go to Table 8-15 Mixer Electrical Troubleshooting
3	Is the loading door closed?	• Yes, go to Step 4. • No, shut the loading door.
4	Is the "Mixer" toggle switch in the "Forward" position?	• Yes, go to Step 5. • No, move the toggle switch to the forward position.
5	Move the "Mixer" toggle switch to the “Reverse” position. Is the agitator moving?	• Yes, allow mixer to reverse for 15 seconds and then move the "Mixer" toggle switch to the "Forward" position. Go to Step 6. • No, go to Table 8-15 Mixer Electrical Troubleshooting
6	Open the Material loading door. Are there several un-melted blocks in the tank?	• Yes, this may cause the agitator to jam. Use the mixer toggle switch to move the agitator forward and backward until the material melts enough to allow forward movement without jamming. Crafco recommends you add one to two blocks every three to four minutes during dispensing of product. • No, go to Table 8-15 Mixer Electrical Troubleshooting
7	Is the hydraulic fluid level near the center of the sight gauge? Check at ambient temperature. See Fig. 5-1 Hydraulic Fluid Level and Temp. Gauge	• Yes, go to Table 8-15 Mixer Electrical Troubleshooting • No, fill oil to the center of the sight gauge.

©2026 by Crafco All Rights Reserved

8.2.2 Mixer Electrical Troubleshooting

Note: Use Fig. 8-5 Mixer Schematic while troubleshooting the mixer electrical system.

Table 8-15 Mixer Electrical Troubleshooting

Step	Possible Cause	If . . .
1	Is the amber light "ON" on the Din Plug when the "Mixer" toggle switch is in the "Forward" position? (For forward din plug location. Refer to Fig. 8-7 Din Plug Layout.	• Yes, then the mixer should be working. If it is not working see Table 8-17 Mixer Hydraulic Troubleshooting. • No, go to Step 1a.
1a	Unscrew the din plug center screw so you can pull the din plug up about 1/4" in order to check for voltage. Is there 12Vdc from side post to side post?	• Yes, the electrical system for the agitator is working properly; go to Table 8-17 Mixer Hydraulic Troubleshooting Also replace din plug at earliest convenience to retain visual troubleshooting ability. • No, go to Step 2.
2	Is there 12Vdc between the lid switch “RED/WHT-TH-11” and “RED-TH1-21” wires and a nearby ground source? • (Check both wires on the bottom of the lid switch with the lid closed.)	• Yes, on both wires check for loose connections or broken wires between lid switch and terminal block. • Yes, on only one wire when the lid is closed. Readjust the lid switch so that the lid completely depresses the switch, and then recheck for 12Vdc. If the same result happens, replace the lid switch. • No, go to Step 3.
3	Is there 12Vdc between the "Mixer" toggle switch bottom post “BRN-TH1-15” wire and ground cluster in the lower right-hand corner of the back panel? (With the "Mixer" toggle switch in the "Forward" position.) See Fig. 8-7 Din Plug Layout	• Yes, replace din plug. • No, go to Step 3a.

Table 8-16 Mixer Electrical Troubleshooting (continued)

Step	Possible Cause	If . . .
3a	Is there 12Vdc between the "Mixer" toggle switch center post “RED/WHT-TH1-26” wire and nearby cluster in the lower right-hand corner of the back panel?	• Yes, replace mixer toggle switch • No, go to Step 4.
4	Check for 12Vdc between the Red TH1-21 and Pink-1 on the hose PAKSTAT terminal #9 and terminal #8 “BLK-2” wire?	• Yes, on both, check for loose connections or broken wires between lid switch and hose board. • No, go to Step 4a.
4a	Is there 12Vdc between the Material PAKSTAT terminal #2 “PNK-2” and “BRN-EH3” on the hose PAKSTAT terminal #2 and terminal #8 “BLK-2” wire? • (Refer to Fig. 8-5 Mixer Schematic)	• Yes, check for loose connections or broken wires between PAKSTAT terminal #2 and terminal block. • No, go to Step 4b.
4b	Is there 12Vdc between the Material PAKSTAT terminal #1 “ORN-1” wire and terminal #8 “BLK-2” wire?	• Yes, replace the Material PAKSTAT. • No, if this is the case then the diesel burner will not be working properly. Recheck the list of steps above or contact a Crafco customer service technician for help.

Fig. 8-4 Checking Din Plug Voltage

Chapter 8 Troubleshooting

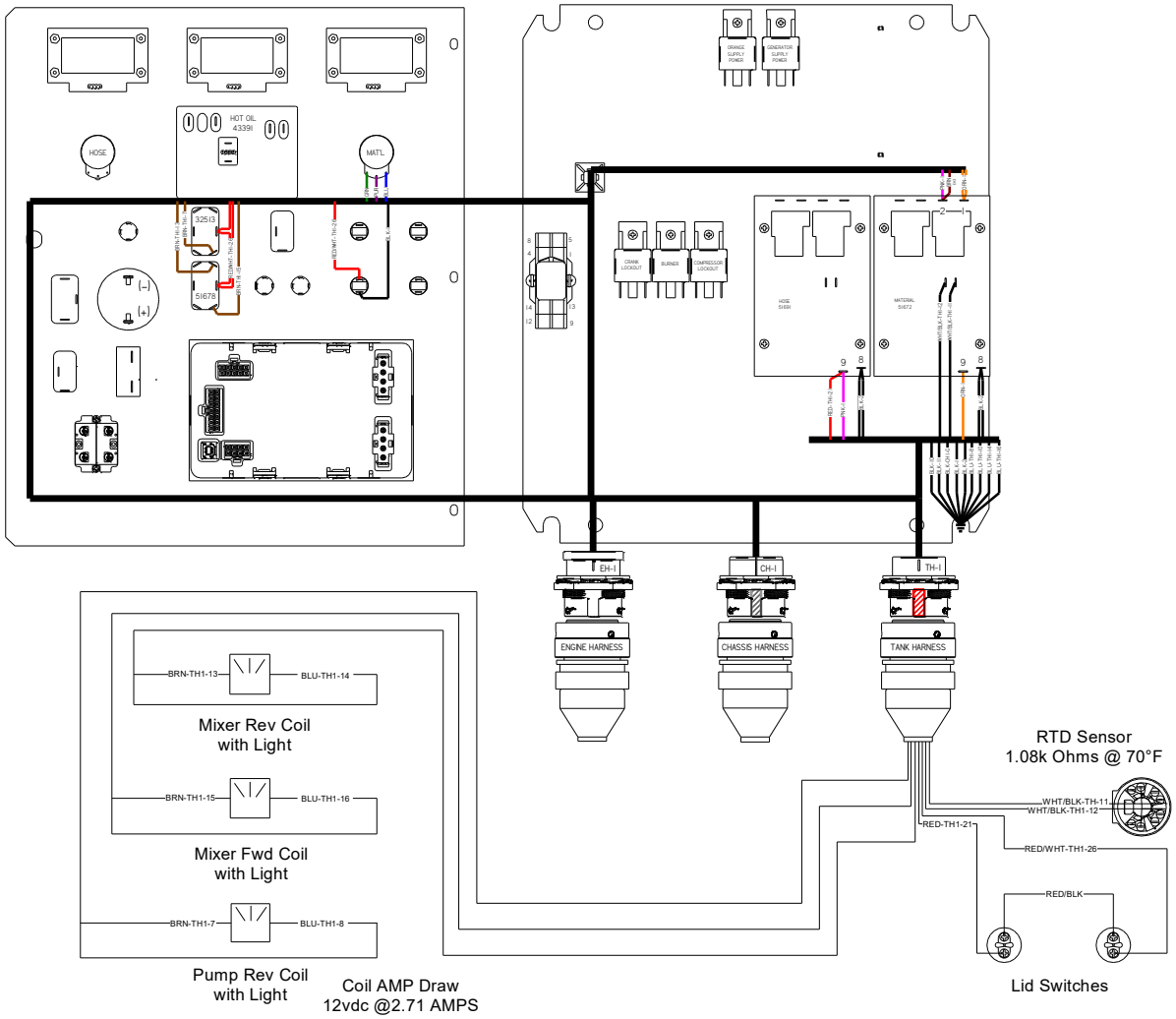

Fig. 8-5 Mixer Schematic

8.2.3 Mixer Hydraulic Troubleshooting

Table 8-17 Mixer Hydraulic Troubleshooting

Step	Possible Cause	If . . .
1	Remove the din plug, then remove the coil by unscrewing the nut on top of the coil. With the coil removed, re-attach the din plug and energize the coil by moving the mixer switch to Forward or Reverse, then insert a screwdriver into the center of the coil. Does the coil magnetize when the din plug amber light is "ON"?	• Yes, go to Step 2. • No, replace the coil.
2	Is the relief pressure set correctly? (Refer to Fig. 8-6 Hydraulic Valve Pressure Setting, for pressure settings.)	• Yes, go to Step 3. • No, first turn "OFF" the diesel engine, then remove one of the two hydraulic hoses going to the agitator hydraulic motor, cap off the fitting on the motor and use a 3,000 PSI gauge with the proper JIC fitting, attach it to the hose. Start the diesel engine, turn "ON" the main power in the control box, move the "Mixer" toggle switch to the "Forward" position and read the pressure gauge. If the pressure needs to be adjusted use the pressure relief valve labeled "RVA", loosen the jam nut and adjust the pressure with the Allen screw at the end of the relief. Turn clockwise to increase pressure and counterclockwise to decrease pressure, and then tighten the jam nut to lock the pressure. Next turn "OFF" the diesel engine, remove the cap and pressure gauge, then re-attach the hose.
3	Is the hydraulic flow 1.5 GPM from the hydraulic valve? If you do not have a flow meter, call a local hydraulic shop to run the test for you.	• Yes, call Crafco and speak to a customer service technician you should have been able to find the problem. • No, replace the flow divider in the hydraulic valve.
4	Is the hydraulic flow correct from the hydraulic pump? If you do not have a flow meter, call a local hydraulic shop to run the test for you. (Refer to Fig. 8-6 Hydraulic Valve Pressure Setting for flow rate).	• Yes, call Crafco and speak to a customer service technician you should have been able to find the problem. • No, replace the hydraulic pump.

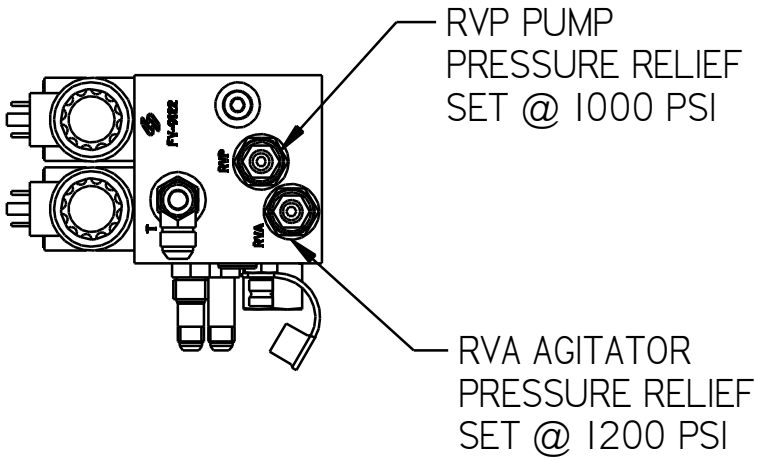

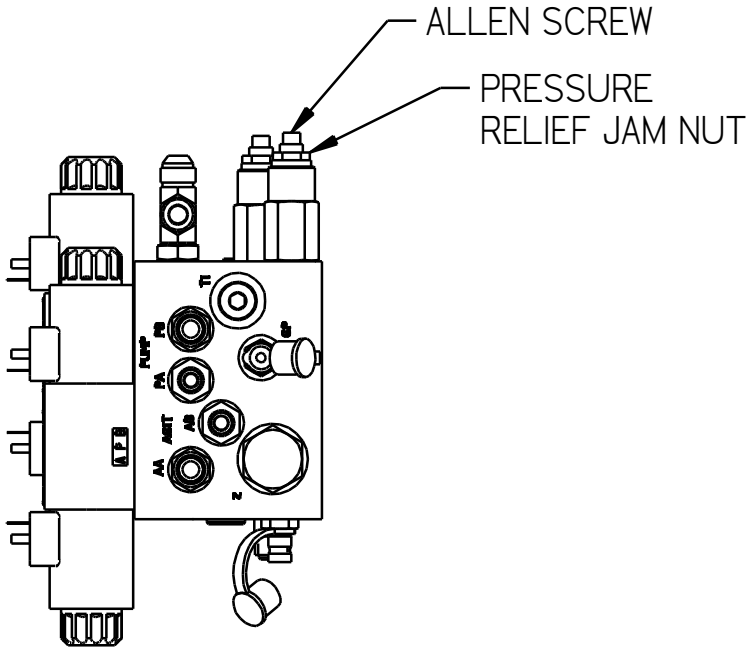

Agitation Direction = Counterclockwise
Hydraulic Flow Compressor = Front section 18.55 GPM @ 2800 RPM
Hydraulic Flow Compressor = Rear section 7.39 GPM @ 2800 RPM
Compressor Relief = 2500 PSI

Fig. 8-6 Hydraulic Valve Pressure Setting

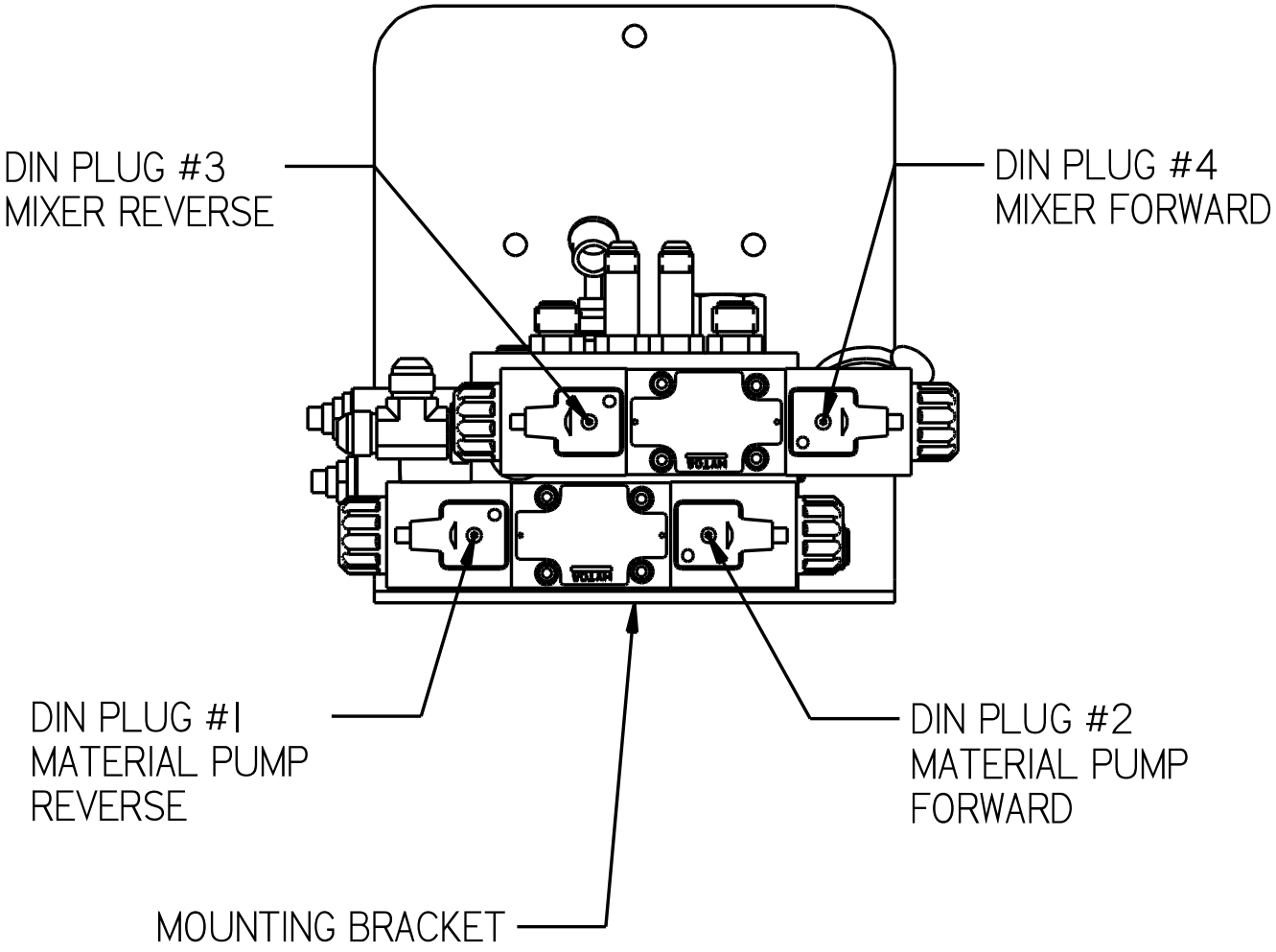

Fig. 8-7 Din Plug Layout

8.3 Hose Troubleshooting

8.3.1 Symptom: Hose Does Not Heat

Table 8-18 Basic Visual Hose Troubleshooting

Step	Possible Cause	If . . .
1	Is the Material Temperature Display at or above 275°F?	• Yes, go to Step 2. • No, continue to allow the machine to heat. (Make sure the Material dial and the Hot Oil dial are set at operating temperatures.)
2	Is the red "HEATED HOSE" light "ON"?	• Yes, go to Table 8-19 Hose Electrical Troubleshooting • No, allow the machine to heat material to 275°F.
2a	Is the circuit breaker tripped?	• Yes, reset the circuit breaker by pushing in the button which has popped out. • No, go to Table 8-19 Hose Electrical Troubleshooting

8.3.2 Hose Electrical Troubleshooting

NOTE: Use Fig. 8-9 Hose Circuit Schematic while troubleshooting the hose electrical system.

Table 8-19 Hose Electrical Troubleshooting

Step	Possible Cause	If . . .
1	Is there 12Vdc between “BATT” post BLU-CH1-B on the generator and the generator case body or grounding strap?	• Yes, go to Step 2. • No, go to Step 8.
2	Change the setting on your voltmeter to check for AC Voltage. See Fig. 7-1 Standard Multimeter Is there 24Vac between the three posts on the generator, white, green, and black wires? • **NOTE**: Check between black and white, black and green, and green and white.	• Yes, go to Step 3 • No, stop the engine, tighten the belt, restart the engine and recheck output voltage. • Still no, replace the generator.

Table 8-20 Hose Electrical Troubleshooting (continued)

Step	Possible Cause	If . . .
3	Move to the rear of the unit to the junction box. Is there 24Vac between the white, green, and black wires? **NOTE**: Check between black and white, black and green, and green and white. See Fig. 8-10 Junction Box Wiring.	• Yes, go to Step 4. • No, check for any damage on the three-wire cable between the generator and the junction box.
4	Check the three heating element wires (blue) in the junction box for 30-35 Amps cold or 20-22 Amps hot. **NOTE**: Always use a clamp-on amp meter to perform this test. Each wire should have the same amp reading (+/- 1 amp). See Fig. 7-2 Clamp – On Amp Meter/Multimeter.	• Yes, the hose and wand should be heating. • No, go to Step 5.
5	• Check for continuity in the hose from end to end. Disconnect the three blue heating element wires (blue) from the terminal block inside the junction box and disconnect the five-pin plug between the hose and wand. Refer to Fig. 8-8 Junction Box Voltage Testing **NOTE**: Check each letter “D”, “E”, and “A” with the three blue wires on the other end of the hose. There should only be continuity on one wire to each letter.	• Yes, go to Step 6. • No, either there was no continuity from one letter to the other end of the hose or there was more than one wire with continuity to a letter. This hose needs to be repaired or replaced. Contact Crafco to send back the hose for repair.
6	Check for continuity in the wand between “D”, “E”, and “A”. **NOTE**: Check between “D” and “E”, “D” and “A”, and “A” and “E”.	• Yes, go to Step 7. • No, this wand needs to be repaired or replaced. Contact Crafco to send back the wand for repair.
7	Check the RTD sensor in the hose against the readout in the control box. Disconnect the black and white wires from the terminal block in the junction box and test for ohms. Refer to Table 8-24 RTD Sensor Ohms vs. Temperature.	• Yes, the readout matches the table, go to Step 8. • No, this hose needs to be repaired or replaced. Contact Crafco to send back the hose for repair.

©2026 by Crafco All Rights Reserved

Table 8-21 Hose Electrical Troubleshooting (continued)

Step	Possible Cause	If . . .
8	Is there 12Vdc between generator supply power relay “BLU-CH1-B” “87” wire and “BLK-11” “86” on the same relay?	• Yes, check for loose or broken wire between “BLU-CH1-B” and the “BATT” terminal on the generator. (check pins and sockets on the middle connector at the bottom of the control box) • No, go to Step 9.
9	Is there 12Vdc between generator supply power relay “BLU-10” “85” wire and “BLK-11” “86” on the same relay?	• Yes, check for loose or broken wires between “85 and “86 on the generator supply power relay. • No, go to Step 10
10	Is there 12Vdc between generator supply power relay “FUSE/BLU-CH1-F” “30” wire and “BLK-11” “86” on the same relay?	• Yes, go to Step12. • No, check the inline fuse, if good then go to Step 11. If bad replace fuse.
11	Is there 12Vdc between the circuit breaker (located under the battery tray) “BLU/WHT-CH1-F” wire and the ground lug on the battery tray?	• Yes, inspect the wire harness between the circuit breaker and the control box, also check the pins and sockets in the connectors at the bottom of the control box, for any damage, or pushed back and not making good connection. • No, go to Step 7 “Burner Electrical Troubleshooting” and repeat that Step.
12	Is there 12Vdc between Hose PAKSTAT terminal #4 “BLU-10” wire and terminal #8 “BLK-2” wire?	• Yes, check for loose or broken wires between terminal #4 and the relay “85” • No, go to Step 13.
13	Is there 12Vdc between Hose PAKSTAT terminal #3 “PNK-1” wire and terminal #8 “BLK-2” wire?	• Yes, check for loose or broken wires between terminal #3 and terminal #4 • No, go to Step 14.
14	Is there 12Vdc between Hose PAKSTAT “PNK-1 and “RED-TH1-21” wire terminal #9 and “BLK-2” wire terminal #8?	• Yes, check for loose or broken wires between terminal #9 and terminal #3. • No, go to Step 15.

Table 8-22 Hose Electrical Troubleshooting (continued)

Step	Possible Cause	If . . .
15	Is there 12Vdc between Hose PAKSTAT “PNK-1” wire terminal #1 and “BLK-2” wire terminal #8?	• Yes, check for loose or broken wire between terminal #9 and terminal #1. • No go to Step 16
16	Is there 12Vdc between Material PAKSTAT “PNK-1/BRN” wire terminal #2 and “BLK-2” wire terminal #8?	• Yes, check for loose or broken wire between Hose PAKSTAT terminal #1 and Hose PAKSTAT terminal #8. • No go to Steo 17
17	Is there 12Vdc between Material PAKSTAT “ORN-1” wire terminal #1 and “BLK-2” wire terminal #8?	• Yes, check for loose or broken wire between terminal #2 and terminal #8. • No if this is the case then the diesel burner will not be working properly. Recheck the list of steps above or contact a Crafco customer service technician for help.

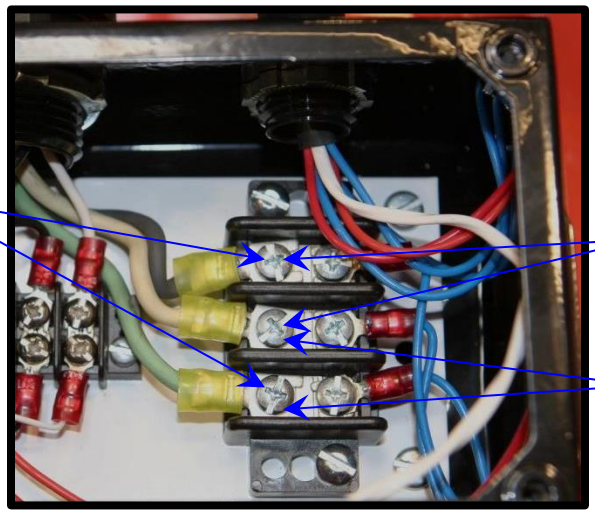

Fig. 8-8 Junction Box Voltage Testing

Chapter 8 Troubleshooting

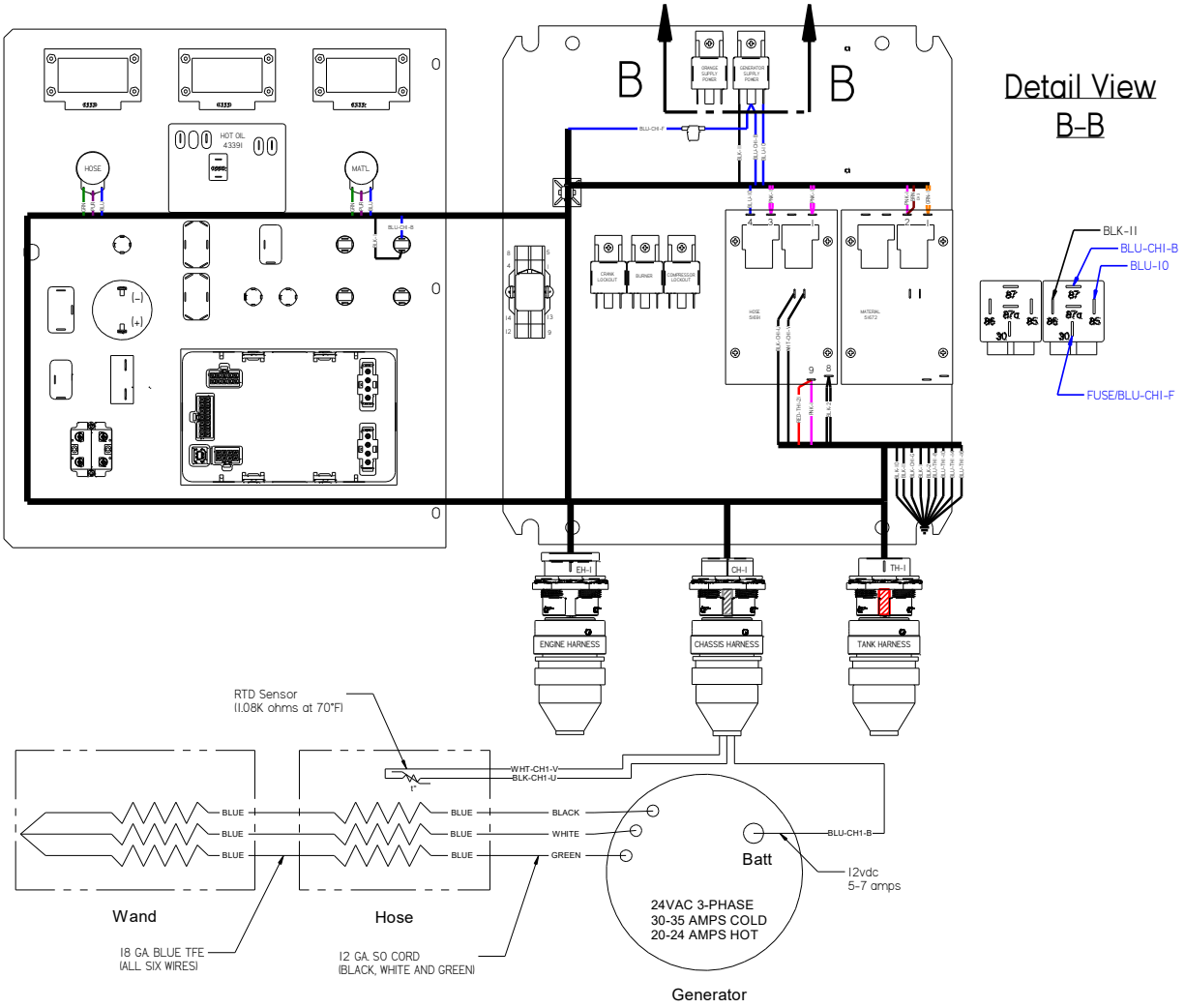

Fig. 8-9 Hose Circuit Schematic

Chapter 8 Troubleshooting

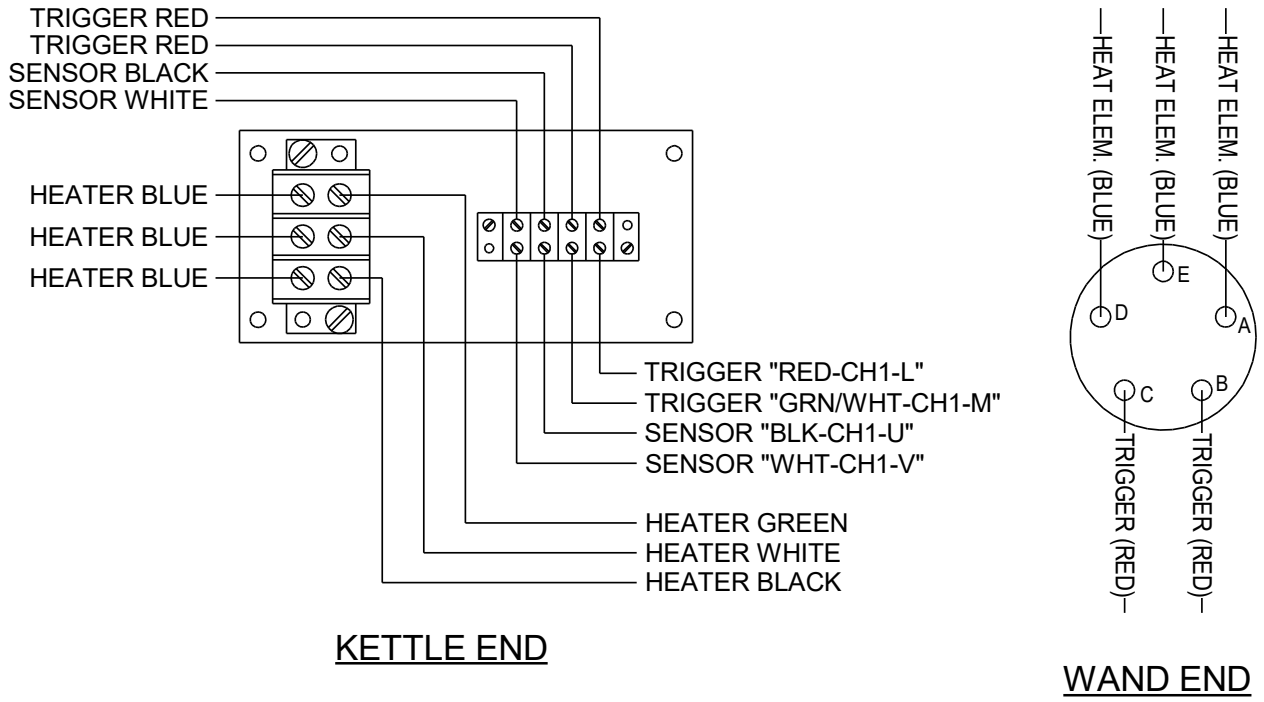

Fig. 8-10 Junction Box Wiring

8.3.3 Symptom: Trigger is not Working

Table 8-23 Trigger is Not Working

Step	Possible Cause	If . . .
1	Check continuity between two red wires coming from the hose in junction box. **NOTE:** These wires must be disconnected from the terminal block and the trigger depressed to perform this test.	• Yes, go to Table 8-26 Basic Visual Pump Troubleshooting. • No, go to Step 2.
2	Disconnect the electrical connector between the hose and wand, check for continuity between C and B wand side.	• Yes, this hose needs to be repaired or replaced. Contact Crafco to send back the hose for repair. • No, this wand needs to be repaired or replaced. Contact Crafco to send back the hose for repair.

8.3.4 RTD Sensor Ohms vs. Temperature

Table 8-23 and Table 8-24 below shows what the ohm reading would be for a given temperature. The following are the instructions for using the table.

Measure the resistance (ohms) of the sensor in question with an ohm meter (See 7.3 Checking Resistance (Ohms)) in Section 7 How to Use a Multimeter.

Find the reading in the chart (columns 0 through 9).

Follow the row to the left and get the temperature in 10°F increments, then follow the column up to get the 1°F increment. (For example, 1391 Ohms = 215°F)

Table 8-24 RTD Sensor Ohms vs. Temperature

°F	0	1	2	3	4	5	6	7	8	9
0	930.3	932.5	934.7	936.9	939.1	941.3	943.4	945.6	947.8	950.0
10	952.2	954.3	956.5	958.7	960.9	963.0	965.2	967.4	969.6	971.8
20	973.9	976.1	978.3	980.5	982.6	984.8	987.0	989.1	991.3	993.5
30	995.7	997.8	1000.0	1002.2	1004.3	1006.5	1008.7	1010.9	1013.0	1015.2
40	1017.4	1019.5	1021.7	1023.9	1026.0	1028.2	1030.4	1032.5	1034.7	1036.9
50	1039.0	1041.2	1043.4	1045.5	1047.7	1049.8	1052.0	1054.2	1056.3	1058.5
60	1060.7	1062.8	1065.0	1067.1	1069.3	1071.5	1073.6	1075.8	1077.9	1080.1
70	1082.2	1084.4	1086.6	1088.7	1090.9	1093.0	1095.2	1097.3	1099.5	1101.6
80	1103.8	1106.0	1108.1	1110.3	1112.4	1114.6	1116.7	1118.9	1121.0	1123.2
90	1125.3	1127.5	1129.6	1131.8	1133.9	1136.1	1138.2	1140.4	1142.5	1144.7
100	1146.8	1149.0	1151.1	1153.2	1155.4	1157.5	1159.7	1161.8	1164.0	1166.1
110	1168.3	1170.4	1172.5	1174.7	1176.9	1179.0	1181.1	1183.3	1185.4	1187.5
120	1189.7	1191.8	1194.0	1196.1	1198.2	1200.4	1202.5	1204.6	1206.8	1208.9
130	1211.0	1213.2	1215.3	1217.5	1219.6	1221.7	1223.9	1226.0	1228.1	1230.3
140	1232.4	1234.5	1236.7	1238.9	1240.9	1243.0	1245.2	1247.3	1249.4	1251.6
150	1253.7	1255.8	1258.0	1260.1	1262.2	1264.3	1266.5	1268.6	1270.7	1272.8
160	1275.0	1277.1	1279.2	1281.3	1283.5	1285.6	1287.7	1289.8	1292.0	1294.1
170	1296.2	1298.3	1300.4	1302.6	1304.7	1306.8	1308.9	1311.0	1313.2	1315.3
180	1317.4	1319.5	1321.6	1323.8	1325.9	1328.0	1330.1	1332.2	1334.3	1336.5
190	1338.6	1340.7	1342.8	1344.9	1347.0	1349.1	1351.2	1353.4	1355.5	1357.6
200	1359.7	1361.8	1363.9	1366.0	1368.1	1370.2	1372.4	1374.5	1376.6	1378.7
210	1380.8	1382.9	1385.0	1387.1	1389.2	1391.3	1393.4	1395.5	1397.6	1399.7
220	1401.8	1403.9	1406.0	1408.1	1410.3	1412.4	1414.5	1416.6	1418.7	1420.8
230	1422.9	1425.0	1427.1	1429.2	1431.3	1433.4	1435.5	1437.6	1439.6	1441.7
240	1443.8	1445.9	1448.0	1450.1	1452.2	1454.3	1456.4	1458.5	1460.6	1462.7
250	1464.8	1466.9	1469.0	1471.1	1473.2	1475.3	1477.3	1479.4	1481.5	1483.6
260	1485.7	1487.8	1489.9	1492.0	1494.1	1496.1	1498.2	1500.3	1502.4	1504.5

©2026 by Crafco All Rights Reserved

Table 8-25 RTD Sensor Ohms vs. Temperature (continued)

°F	0	1	2	3	4	5	6	7	8	9
270	1506.6	1508.7	1510.8	1512.8	1514.9	1517.0	1519.1	1521.2	1523.3	1525.3
280	1527.4	1529.5	1531.6	1533.7	1535.7	1537.8	1539.9	1542.0	1544.1	1546.1
290	1548.2	1550.3	1552.4	1554.5	1556.5	1558.6	1560.7	1562.8	1564.8	1566.9
300	1569.0	1571.1	1573.1	1575.2	1577.3	1579.4	1581.4	1583.5	1585.6	1587.7
310	1589.7	1591.8	1593.9	1595.9	1598.0	1600.1	1602.2	1604.2	1606.3	1608.4
320	1610.4	1612.5	1614.6	1616.6	1618.7	1620.8	1622.8	1624.9	1627.0	1629.0
330	1631.1	1633.2	1635.2	1637.3	1639.3	1641.4	1643.5	1645.5	1647.6	1649.7
340	1651.7	1653.8	1655.8	1657.9	1660.0	1662.0	1664.1	1666.1	1668.2	1670.2
350	1672.3	1674.4	1676.4	1678.5	1680.5	1682.6	1684.6	1686.7	1688.7	1690.8
360	1692.9	1694.9	1697.0	1699.0	1701.1	1703.1	1705.2	1707.2	1709.3	1711.3
370	1713.4	1715.4	1717.5	1719.5	1721.6	1723.6	1725.7	1727.7	1729.8	1731.8
380	1733.9	1735.9	1737.9	1740.0	1742.0	1744.1	1746.1	1748.2	1750.2	1752.3
390	1754.3	1756.3	1758.4	1760.4	1762.5	1764.5	1766.6	1768.6	1770.6	1772.7
400	1774.7	1776.8	1778.8	1780.8	1782.9	1784.9	1786.9	1789.0	1791.0	1793.1
410	1795.1	1797.1	1799.2	1801.2	1803.2	1805.3	1807.3	1809.3	1811.4	1813.4
420	1815.4	1817.5	1819.5	1821.5	1823.6	1825.6	1827.6	1829.6	1831.7	1833.7
430	1835.7	1837.8	1839.8	1841.8	1843.8	1845.9	1847.9	1849.9	1851.9	1854.0
440	1856.0	1858.0	1860.0	1862.1	1864.1	1866.1	1868.1	1870.2	1872.2	1874.2
450	1876.2	1878.2	1880.3	1882.3	1884.3	1886.3	1888.3	1890.4	1892.4	1894.4
460	1896.4	1898.4	1900.5	1902.5	1904.5	1906.5	1908.5	1910.5	1912.6	1914.6
470	1916.6	1918.6	1920.6	1922.6	1924.6	1926.6	1928.7	1930.7	1932.7	1934.7
480	1936.7	1938.7	1940.7	1942.7	1944.7	1946.8	1948.8	1950.8	1952.8	1954.8
490	1956.8	1958.8	1960.8	1962.8	1964.8	1966.8	1968.8	1970.8	1972.8	1974.8
500	1976.8	1978.8	1980.8	1982.9	1984.9	1986.9	1988.9	1990.9	1992.9	1994.9
510	1996.9	1998.9	2000.9	2002.9	2004.9	2006.9	2008.8	2010.8	2012.8	2014.8
520	2016.8	2018.8	2020.8	2022.8	2024.8	2026.8	2028.8	2030.8	2032.8	2034.8
530	2036.8	2038.8	2040.8	2042.8	2044.7	2046.7	2048.7	2050.7	2052.7	2054.7
540	2056.7	2058.7	2060.7	2062.7	2064.6	2066.6	2068.6	2070.6	2072.6	2074.6
550	2076.6	2078.5	2080.5	2082.5	2084.5	2086.5	2088.5	2090.4	2092.4	2094.4

©2026 by Crafco All Rights Reserved

8.4 Pump Troubleshooting

8.4.1 Symptom: Material Does Not Dispense When the Pump is Activated

Table 8-26 Basic Visual Pump Troubleshooting

Step	Possible Cause	If . . .
1	Start Troubleshooting at the control box. Is the Hose Temperature Display at or above 325°F?	• Yes, go to Step 2. • No, continue to allow the machine to heat. (Make sure the Hose dial is set at the operating temperature.)
2	Is the red "Pump" light "ON"?	• Yes, go to Step 3. • No, allow the hose to continue to heat.
3	With the wand in the shoebox, pull the wand trigger and look at the material pump shaft chain coupler. Is it spinning clockwise? (Remove the chain guard if necessary.)	• Yes, go to Step 5. • No, adjust the material flow control to increase the flow. • No, go to Step 4.
4	Inside the control box and under the front panel, find the relay cube for the pump. It is found near the middle, left-hand side of the box. It is a clear yellow cube with a green button facing the top of the control box. When you press this button, material should dispense from the wand, so be careful. Does the material pump shaft coupler turn when you press the green button?	• Yes, this tells you that everything from the cube relay to the hydraulic manifold is working properly, your issue is inside the hose and wand. Go to Table 8-19 Hose Electrical Troubleshooting, Steps 1 through 5 to find the problem. • No, go to Step 5.
5	Is the hydraulic fluid level near the center of the sight gauge? See Fig. 5-1 Hydraulic Fluid Level and Temp. Gauge	• Yes, go to Table 8-27 Pump Electrical Troubleshooting • No, fill oil to the center of the sight gauge.

8.4.2 Pump Electrical Troubleshooting

NOTE: Use Fig. 8-11 Pump Schematic while troubleshooting the pump electrical system.

Table 8-27 Pump Electrical Troubleshooting

Step	Possible Cause	If . . .
1	Is the Hose Temperature at or above 325°F?	• Yes, go to Step 2. • No, continue to allow the machine to heat.
2	Is there 12 Vdc between the Hose PAKSTAT terminal #2 “RED-CH1-L” wire and terminal #8 “BLK-2” wire? (Refer to the pump circuit schematic Fig. 8-11 Pump Schematic)	• Yes, go to Step 3. • No, go to Step 2a.
2a	Is there 12 Vdc between the Hose PAKSTAT terminal #1 “PNK-1” wire and terminal #8 “BLK-2” wire?	• Yes, check for a broken wire or poor wire crimp on the terminal #2 “RED-CH1-L” wire and recheck for 12 Vdc. (If still no voltage replace the Hose PAKSTAT.) • No, go to Step 2b.
2b	Is there 12 Vdc between the Hose PAKSTAT terminal #9 “PNK-1” and “RED-TH1-21” wire and terminal #8 “BLK-2” wire?	• Yes, check for a broken wire or poor wire crimp on terminal #1 “PNK-1” wire. (If you have 12 Vdc on terminal #9 “PNK-1” then you must have 12 Vdc on terminal #1 “PNK-1” wire; they are the same wire.) • No, If this is the case you would have had a hose heating issue.
3	Move to the junction box at the rear of the machine and open the cover. Is there 12 Vdc between the trigger “RED-CH1-L” wire coming from the control box and a nearby ground source?	• Yes, go to Step 3a. • No, check for a broken wire or poor wire crimp between the junction box and the control box “RED-CH1-L” wire terminal #2 on the Hose PAKSTAT.
3a	Is there 12 Vdc between the trigger “RED” wire going toward the hose (just above where you checked in Step 4) and a nearby ground source?	• Yes, go to Step 3b. • No, check for a broken wire or poor wire crimp on the red trigger going toward the hose.

Table 8-28 Pump Electrical Troubleshooting (continued)

Step	Possible Cause	If . . .
3b	Is there 12 Vdc between the trigger “RED” wire (the second red trigger wire) going toward the hose and a nearby ground source? (Make sure the wand trigger is pulled during this Step.)	• Yes, go to Step 3c. • No, go to Step 4.
3c	Is there 12 Vdc between the trigger “GRN/WHT-CH1-M” wire coming from the control box and a nearby ground source? (Make sure the wand trigger is pulled during this Step.)	• Yes, go to Step 5. • No, check for a broken wire or poor wire crimp on the “GRN/WHT-CH1-M” wire going to the control box.
4	Disconnected the five-pin connector between the hose and wand. Refer to Fig. 8-10 Junction Box Wiring Is there continuity on the wand connector between red trigger "C" post and red trigger "B" post while the wand trigger is pulled?	• Yes, go to Step 4a. • No, call Crafco and request an RA # so you can send your wand back for repair.
4a	Disconnect the two red trigger wires in the junction box going toward the hose. Move the wand end of the hose next to the junction box. Is there continuity on the hose connector "C" socket and only one red trigger in the junction box? (Check both red trigger wires in the junction box one at a time.)	• Yes, go to Step 4b. • No, recheck the hose connector "C" socket to the other red trigger wire in the junction box. (You want to see continuity between only one red trigger wire and the "C" socket.) • Still no or continuity to both red trigger wire, then call Crafco and request an RA# so you can send your hose back for repair.

Table 8-29 Pump Electrical Troubleshooting (continued)

Step	Possible Cause	If . . .
4b	Is there continuity on the hose connector "B" socket and red trigger in the junction box?	• Yes, call Crafco and speak to a service technician, you should have found the problem. • No, recheck the hose connector "B" socket to the other red trigger wire in the junction box. (You want to see continuity between only one red trigger wire and the "B" socket.) • Still no or continuity to both red trigger wire, then call Crafco and request an RA# so you can send your hose back for repair.
5	Move back to the control box. Is there 12 Vdc between the pump relay base #14 terminal “GRN/WHT-CH1-M” trigger wire and the #13 terminal “BLK-2” wire, when the trigger is pulled?	• Yes, go to Step 6. • No, check for a broken wire or loose wire at the relay base on both the green trigger wire and the two black ground wires. Also check for any damage to the “GRN/WHT-CH1-M” trigger wire from the junction box to the control box.
6	Is there 12 Vdc between the pump relay base #12 terminal “RED-3” wire and the #13 terminal “BLK-2” wire?	• Yes, go to Step 7. • No, go to Step 6a.
6a	Is there 12 Vdc between the burner toggle switch center post “RED-3” wire and the pump relay base #13 terminal “BLK-2” ground wire?	• Yes, check for a broken wire or loose wire at the circuit breaker and at the terminal block red wire. • No, if this is the case you would have had problems with the burner working. Call Crafco and speak to a service technician.
7	Is there 12 Vdc between the pump relay base #8 terminal “BRN-TH1-9” pump wire and the #13 terminal “BLK-2” ground wire?	• Yes, go to Step 8. • No, replace the pump relay cube.

Table 8-30 Pump Electrical Troubleshooting (continued)

Step	Possible Cause	If . . .
8	Move to the rear of the machine. Remove the cover over the hydraulic manifold. Is the amber light "ON" when the wand trigger is pulled? (Looking down at the top of the hydraulic valve, Pump forward is the din plug lower right-hand corner, Refer to Fig. 8-7 Din Plug Layout)	• Yes, go to Step 9. • No, go to Step 8a.
8a	Unscrew the din plug center screw so you can pull the din plug up about 1/4", so you can check for voltage. Is there 12 Vdc from side post to side post, when the wand trigger is pulled?	• Yes, the electrical system for the agitator is working properly, go to Table 8-32 Pump Hydraulic Troubleshooting. • No, recheck the amber light, if the light comes "ON" and you do not have 12 Vdc then replace the din plug.
9	Does the hydraulic pump shaft coupler turn counterclockwise, when you hold the "Pump" toggle switch in the "Reverse" position?	• Yes, this feature is working properly. • No, go to Step 9a.
9a	Is the amber light "ON" when you hold the "Pump" toggle switch in the "Reverse" position? (Looking down at the top of the hydraulic valve, Pump reverse is the din plug lower left-hand corner, Refer to Fig. 8-7 Din Plug Layout)	• Yes, go to Step 9e. • No, go to Step 9b.
9b	Is there 12 Vdc between the "Pump" toggle switch bottom post “BRN-TH1-7” wire and ground cluster in the lower right-hand corner of the back panel? when the toggle switch is in the "Reverse" position? (Refer to Fig. 8-7 Din Plug Layout)	• Yes, go to Step 9e. • No, go to Step 9c.

Table 8-31 Pump Electrical Troubleshooting (continued)

Step	Possible Cause	If . . .
9c	Is there 12 Vdc between the "Pump" toggle switch center post “RED-TH1-26” wire and ground cluster in the lower right-hand corner of the back panel?	• Yes, replace the toggle switch. • No, go to Step 9d.
9d	Is there 12 Vdc between the "Mixer" toggle switch center post “RED-TH1-26” wire and ground cluster in the lower right-hand corner of the back panel?	• Yes, check for a broken wire or poor wire crimp on the red wire between the "Mixer" toggle switch and the "Pump" toggle switch. • No, if this is the case you have had an agitator problem. Call Crafco and speak to a service technician.
9e	Unscrew the din plug center screw so you can pull the din plug up about 1/4", so you can check for voltage. Is there 12 Vdc from side post to side post, when the wand trigger is pulled?	• Yes, the electrical system for the agitator is working properly, go to Table 8-32 Pump Hydraulic Troubleshooting. • No, recheck the amber light, if the light comes "ON" and you do not have 12 Vdc then replace the din plug.

©2026 by Crafco All Rights Reserved

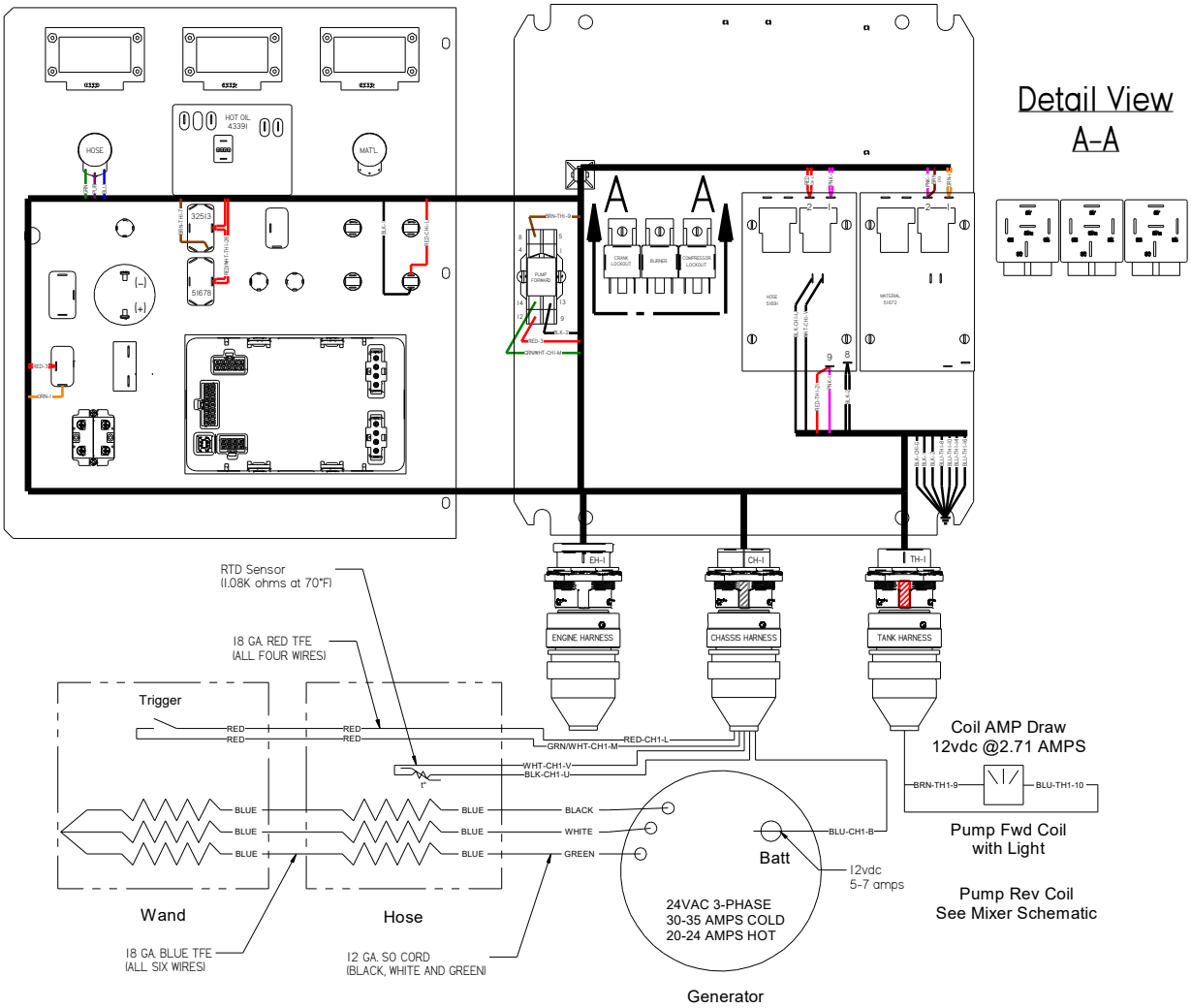

Fig. 8-11 Pump Schematic

8.4.3 Pump Hydraulic Troubleshooting

Table 8-32 Pump Hydraulic Troubleshooting

Step	Possible Cause	If…
1	Does the coil magnetize when the din plug amber light is “ON”?	• Yes, go to Step 2. • No, remove the din plug, then remove the coil by unscrewing the nut on the end of the coil. With the coil removed reattach the din plug and place a metal screwdriver in the center of the coil to see if the coil is magnetic. If it is not, recheck the din plug is plugged into the coil and the amber light is “ON”. If still not magnetic replace the coil.
2	Is the relief pressure set correctly? (Refer to Fig. 8-6 Hydraulic Valve Pressure Setting).	• Yes, go to Step 3. • No, first turn “OFF” the diesel engine, then remove one of the two hydraulic hoses going to the pump hydraulic motor, cap off the fitting on the motor and use a 3000 PSI gauge with the proper JIC fitting, attach it to the hose. Start the diesel engine, turn “ON” the main power in the control box, pull the wand trigger and read the pressure gauge. If the pressure needs to be adjusted use the pressure relief valve marked “RVP”, loosen the jam nut and adjust the pressure with the allen screw at the end of the relief. Turn clockwise to increase pressure and counterclockwise to decrease pressure, then tighten the jam nut to lock pressure. Next turn “OFF” the diesel engine, remove the cap, pressure gauge and reattach the hose.
3	Is the hydraulic flow correct from the hydraulic pump? (Refer to Fig. 8-6 Hydraulic Valve Pressure Setting).	• Yes, call Crafco and speak to a service technician. You should have been able to find the problem. • No, call a local hydraulic shop to see if they can run a hydraulic pump flow test, using the information in Fig. 8-6 Hydraulic Valve Pressure Setting.

8.5 DPF and Regen Modes

This engine is equipped with an emissions control system that includes a “Diesel Particulate Filter” (DPF). This filter traps large soot particles during normal operation of the engine. Over time, the filter accumulates enough soot that it must be cleaned by running a “Regeneration” cycle (REGEN). This cycle runs the engine at very high exhaust temps to burn off the soot thereby cleaning the DPF. There are 2 basic types of REGEN: Auto and Manual.

Auto REGEN: This mode runs automatically during normal use of the engine. There are no restrictions on engine power output or use during these cycles. When this cycle is active, a message will be displayed on the engine controller screen. This cycle can be interrupted such as engine shut down without issue – it will simply resume the next time the engine is up to temp if the engine computer (ECU) determines Auto REGEN is still required to bring soot levels down to normal levels. No user input is required to initiate Auto REGEN nor during Auto REGEN active mode. In normal use, Auto REGEN should be able to keep the DPF clean and not require the more aggressive Manual REGEN mode as described below.

Manual REGEN: This mode is required when the soot levels exceed the level that Auto REGEN can adequately clean from the DPF. When the engine computer (ECU) determine that this mode is required, a message will be displayed on the engine controller screen “Regen Required”. This mode requires user input and will prohibit air compressor (if equipped) use while Manual REGEN is active. This cycle should not be interrupted such as engine shut down, it will take approximately 30 minutes to complete.

1. When “Regen Required” is displayed on the engine controller, use the arrow buttons to scroll to the REGEN menu. Scroll down to the “Manual Regen” option. The engine will throttle down to 800 RPM.
2. The engine computer will verify that conditions required for Manual REGEN are present (engine coolant temp > 140F, and engine has been running >15 minutes). If these conditions have not been met, a message will appear on the engine controller screen “Can’t Regen”. If these conditions have been met, a message will appear on the engine controller screen “Regen Now?”.
3. Select “Yes”. Failure to select “Yes” or selecting “No” will cause the Manual REGEN mode to exit and return to previous engine RPM. “Regen Required” would appear on the screen again.
4. After selecting “YES” for “Regen Now?”, the engine will gradually increase speed until the Manual REGEN speed is reached.
5. While Manual REGEN is active, a message “Manual Regen” and “Comp Disabled” will alternately appear on the engine controller screen. The machine may be used for heating, mixing and pumping material while Manual REGEN is active (30 minutes to complete). Only the air compressor (if equipped) is prohibited (locked out) during Manual REGEN.
6. When Manual REGEN is complete, the engine will throttle back down to 800 RPM for a few seconds then return to previous engine speed.

©2026 by Crafco All Rights Reserved

8.6 Icons for the Regen Modes

The following ICONS appear during the various REGEN modes:

 DPF LAMP	Diesel Particulate Filter (DPF) Lamp A Solid Lamp provides warning that DPF soot levels are increasing. A Flashing Lamp indicates that DPF soot levels have reached a critical stage where a DPF Regen is required.
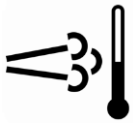 HEST LAMP	High Exhaust Temperature Lamp When this lamp is ON, this indicates that a Regen cycle has been activated warning of high exhaust temperatures.
 REGEN INHIBIT	Regen Inhibit Lamp When this lamp is illuminated, a Regen cannot be performed and soot levels will continue to rise.
 NCD Error	NCD Error This Lamp Illuminates when there is a malfunction of the EGR system and a DTC code is present. Operator Intervention is required to address rising DPF Soot Levels.
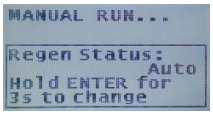 	Regen Screen Display Front Panel Scrolling Screen which allows an operator the capability to enter the Regen Menu Selection. Password may be required if enabled in configuration.
 	Regen Menu When accessing the Regen Menu (if enabled during parameter configuration). Options for Regen control, 1. Set ECM regen to AUTO Regen, 2. Force Manual Regen 3. Regen Inhibit

8.7 Engine Diagnostic Trouble Codes (DTC)

8.7.1 How to use the Diagnostic Trouble Code Table

The engine supplied on the Super Shot 125 Diesel 100CFM Compressor machine is capable of displaying Diagnostic Trouble Codes (DTC) on the engine control panel display. If your engine displays a DTC, most likely you will have to contact your local engine repair center for service. To locate your closest engine repair center, please go here: https://www.yanmar.com/global/dealerlocator/ and locate your closest repair center. To use the table, find the SPN and FMI # from the control panel screen, and match it to the first column in the table listed as “SPN-FMI”. Please see the following figure below:

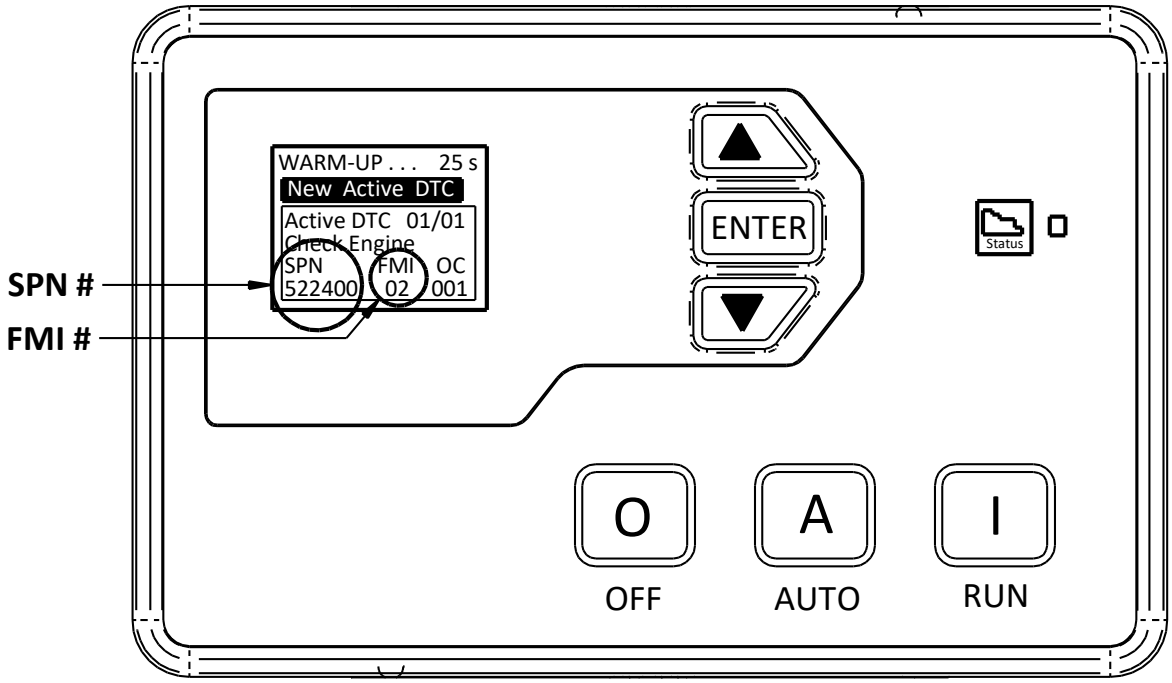

YOUR SPN # IS "522400" FMI # IS "02". FIND ON THE TABLE BELOW

522400 02 = Crankshaft Signal Error

Fig. 8-12 Engine Control Display DTC

8.7.2 Engine DTC Table (48000N)

Table 8-33 Engine DTC Table PN 48000N

SPN	FMI	Component	Error
522400	2	Crankshaft Speed Sensor	Crankshaft signal error
	5		No signal from crankshaft
522401	2	Camshaft Speed Sensor	Camshaft signal error
	5		No signal from camshaft
	7		Angle offset error

Table 8-34 Engine DTC Table PN 48000N (continued)

SPN	FMI	Component	Error
523249	5	Crankshaft Speed Sensor Camshaft Speed Sensor	No signal on both crankshaft and camshaft speed sensors
91	3	Accelerator Sensor 1	Accelerator sensor 1 error (voltage high)
	4		Accelerator sensor 1 error (voltage low)
28	3	Accelerator Sensor 2	Accelerator sensor 2 error (voltage high)
	4		Accelerator sensor 2 error (voltage low)
522624	7	Accelerator Sensor 1 + 2	Dual accelerator sensor error (closed position)
522623	7		Dual accelerator sensor error (open position)
29	3	Accelerator Sensor 3	Accelerator sensor 3 error (voltage high)
	4		Accelerator sensor 3 error (voltage low)
	8	Pulse Sensor	Pulse accelerator sensor error (pulse communication)
28	0	Accelerator Sensor 3	Accelerator sensor 3 error (foot pedal in open position)
	1		Accelerator sensor 3 error (foot pedal in closed position)
51	3	Intake Throttle Position Sensor	Intake throttle position sensor error (voltage high)
	4		Intake throttle position sensor error (voltage low)
102	3	EGR Low Pressure Side Pressure Sensor	EGR low pressure side pressure sensor error (voltage high)
	4		EGR low pressure side pressure sensor error (voltage low)
	13		EGR low pressure side pressure sensor error (abnormal learning value)

©2026 by Crafco All Rights Reserved

Table 8-35 Engine DTC Table PN 48000N (continued)

SPN	FMI	Component	Error
1209	3	EGR High Pressure Side Pressure Sensor	EGR high pressure side pressure sensor error (voltage high)
	4		EGR high pressure side pressure sensor error (voltage low)
	13		EGR high pressure side pressure sensor error (abnormal learning value)
110	3	Engine Coolant Temperature Sensor	Engine coolant temperature sensor error (voltage high)
	4		Engine coolant temperature sensor error (voltage low)
	0		Engine coolant temperature high (overheat)
172	3	Ambient Air Temperature Sensor	Ambient air temperature sensor error (voltage high)
	4		Ambient air temperature sensor error (voltage low)
174	3	Fuel Temperature Sensor	Fuel temperature sensor error (voltage high)
	4		Fuel temperature sensor error (voltage low)
	0		Fuel temperature high
157	3	Rail Pressure Sensor	Rail pressure sensor error (voltage low)
	4		Rail pressure sensor error (voltage high)
3251	3	DPF Differential Pressure Sensor	DPF differential pressure sensor error (voltage high)
	4		DPF differential pressure sensor error (voltage low)
	0		DPF differential pressure sensor error rise error
	13		DPF differential pressure sensor error (abnormal learning value)

©2026 by Crafco All Rights Reserved

Table 8-36 Engine DTC Table PN 48000N (continued)

SPN	FMI	Component	Error
3609	3	DPF High Pressure Side Pressure Sensor	DPF high pressure side pressure sensor error (voltage high)
	4		DPF high pressure side pressure sensor error (voltage low)
3242	3	DPF Inlet Temperature Sensor	DPF inlet temperature sensor error (voltage high)
	4		DPF inlet temperature sensor error (voltage low)
	0		DPF inlet temperature sensor error (high temperature)
3250	3	DPF Intermediate Temperature Sensor	DPF intermediate temperature sensor error (voltage high)
	4		DPF intermediate temperature sensor error (voltage low)
	1		DPF intermediate temperature sensor temperature too low
	0		DPF intermediate temperature sensor rise error (post-injection failure)
108	3	Atmospheric Pressure Sensor	Atmospheric pressure sensor error (voltage high)
	4		Atmospheric pressure sensor error (voltage low)
	10		Atmospheric pressure sensor error (characteristic error)
412	3	EGR Gas Temperature Sensor	EGR gas temperature sensor error (voltage high)
	4		EGR gas temperature sensor error (voltage low)
105	3	Intake Manifold Temperature Sensor	Intake manifold temperature sensor error (voltage high)
	4		Intake manifold temperature sensor error (voltage low)
173	3	Exhaust Manifold Temperature Sensor	Exhaust manifold temperature sensor error (voltage high)
	4		Exhaust manifold temperature sensor error (voltage low)

©2026 by Crafco All Rights Reserved

Table 8-37 Engine DTC Table PN 48000N (continued)

SPN	FMI	Component	Error
1485	7	Main Relay	Main relay contact sticking
	2		Main relay early opening
522243	5	Starting Aid Relay	Starting aid relay disconnection
	6		Starting aid relay GND short circuit
654	5	Injector (No. 1 Cylinder)	Disconnection (injector specific)
	6		Coil short circuit
	3		Short circuit
653	5	Injector (No. 2 Cylinder)	Disconnection (injector specific)
	6		Coil short circuit
	3		Short circuit
652	5	Injector (No. 3 Cylinder)	Disconnection (injector specific)
	6		Coil short circuit
	3		Short circuit
651	5	Injector (No. 4 Cylinder)	Disconnection (injector specific)
	6		Coil short circuit
	3		Short circuit
4257	12	All Injectors	Injector drive IC error
2797	6		Injector drive circuit (bank 1) short circuit (4TN: Common circuit for No. 1, No. 4 and all 3TN cylinders)
2798	6		Injector drive circuit (bank 2) short circuit (4TN: Common circuit for No. 1, No. 4 and all 3TN cylinders)
523462	13	Injector (Correction Value)	Injector (No. 1 cylinder) correction value error
523463	13		Injector (No. 2 cylinder) correction value error
523464	13		Injector (No. 3 cylinder) correction value error
523465	13		Injector (No. 4 cylinder) correction value error

©2026 by Crafco All Rights Reserved

Table 8-38 Engine DTC Table PN 48000N (continued)

SPN	FMI	Component	Error
522571	3	SCV (MPROP)	SCV (MPROP) L side VB short circuit
	6		SCV (MPROP) L side GND short circuit
633	3		SCV (MPROP) H side VB short circuit
	6		SCV (MPROP) H side GND short circuit
	5		SCV (MPROP) disconnection
522572	6		SCV (MPROP) drive current (high level)
	11		SCV (MPROP) pump overload error
157	0	Rail Pressure Error	Rail pressure too high
	18		Rail pressure deviation error (low rail pressure)
	15		Rail pressure deviation error (high rail pressure)
	16	PLV (Common Rail Pressure Limit Valve)	PLV open valve
523469	0		Rail pressure fault (the times of valve opening error)
523470	0		Rail pressure fault (the time of valve opening error)
523489	0		Rail pressure fault (the actual rail pressure is too high during PRV limp home)
523468	9		Rail pressure fault (controlled rail pressure error after PLV valve opening)
523491	0	Rail Pressure Control	Rail pressure fault (injection B/F temperature error during PLV4 limp home)
523460	7		Rail pressure fault (operation time error during RPS limp home)
190	16	Overspeed	Overspeed

©2026 by Crafco All Rights Reserved

Table 8-39 Engine DTC Table PN 48000N (continued)

SPN	FMI	Component	Error
2950	5	Intake Throttle Drive Circuit	No-load of throttle valve drive H bridge circuit
	3		Power short circuit of throttle valve drive H bridge output 1
	4		GND short circuit of throttle valve drive H bridge output 1
	6		Overload on the drive H bridge circuit of throttle valve
2951	3		VB power short circuit of throttle valve drive H bridge output 2
	4		GND short circuit of throttle valve drive H bridge output 2
522596	9	CAN 2	TSC1 (SA1) reception timeout
522597	9		TSC1 (SA2) reception timeout
522599	9		Y_ECR1 reception timeout
522600	9		Y_EC reception timeout
522601	9		Y_RSS reception timeout
237	31		VI reception timeout
	13		VI reception data error
522609	9		Y_ETCP1 reception timeout
522618	9		EBC1 reception timeout
522619	9		Y_DPFIF reception timeout
522730	12		Immobilizer error (CAN communication)
1202	2		Immobilizer error (system)
522610	9	CAN 1	CAN1 (for EGR) reception timeout
522611	9		CAN1 (for exhaust throttle) reception timeout

©2026 by Crafco All Rights Reserved

Table 8-40 Engine DTC Table (continued)

SPN	FMI	Component	Error
2791	0	EGR Valve	EGR overvoltage error
	1		EGR low voltage error
	7		EGR feedback error
	9		EGR ECM data error
	12		Disconnection in EGR motor coils
522579	12		Short circuit in EGR motor coils
522580	12		EGR position sensor error
522581	7		EGR valve sticking error
522582	7		EGR initialization error
522183	1		EGR high temperature thermistor error
522184	1		EGR low temperature thermistor error
522617	12		EGR target value out of range
522746	12	Exhaust Throttle	Exhaust throttle (voltage fault)
522747	12		Exhaust throttle (motor fault)
522748	12		Exhaust throttle (sensor system fault)
522749	12		Exhaust throttle (MPU fault)
522750	12		Exhaust throttle (PCB fault)
522751	19		Exhaust throttle (CAN fault)
630	12	EEPROM	EEPROM memory deletion error
522576	12		EEPROM memory reading error
522578	12		EEPROM memory writing error

©2026 by Crafco All Rights Reserved

Table 8-41 Engine DTC Table (continued)

SPN	FMI	Component	Error
522585	12	ECU Internal Fault	CY146 SPI communication fault
522588	12		Excessive voltage of supply 1
522589	12		Insufficient voltage of supply 1
522590	12		Sensor supply voltage error 1
522591	12		Sensor supply voltage error 2
522592	12		Sensor supply voltage error 3
522744	4		Actuator drive circuit 1 short to ground
522994	4		Actuator drive circuit 2 short to ground
523471	6		Actuator drive circuit 3 short to ground
523473	12		AD converter fault 1
523474	12		AD converter fault 2
523475	12		External monitoring IC and CPU fault 1
523476	12		External monitoring IC and CPU fault 2
523477	12		ROM fault
523478	12		Shutoff path fault 1
523479	12		Shutoff path fault 2
523480	12		Shutoff path fault 3
523481	12		Shutoff path fault 4
523482	12		Shutoff path fault 5
523483	12		Shutoff path fault 6
523484	12		Shutoff path fault 7
523485	12		Shutoff path fault 8
523486	12		Shutoff path fault 9
523487	12		Shutoff path fault 10
523488	0		Recognition error of engine speed

©2026 by Crafco All Rights Reserved

Table 8-42 Engine DTC Table (continued)

SPN	FMI	Component	Error
522323	0	Air Cleaner Switch	Air cleaner clogged alarm
522329	0	Water Separator Switch	Water separator alarm
167	5	Charge Switch	Charge switch open circuit
	1		Charge alarm
100	4	Oil Pressure Switch	Oil pressure switch open circuit
	1		Low oil pressure fault alarm
522573	0	DPF	Excessive PM accumulation (method C)
522574	0		Excessive PM accumulation (method P)
522575	7		Regeneration failure (stationary regeneration failure)
522577	11		Regeneration failure (stationary regeneration not performed)
3720	16	DPF OP Interface	Ash cleaning request 1
	0		Ash cleaning request 2
3719	16		Stationary regeneration standby
	0		Backup mode
3695	14		Reset regeneration is inhibited
3719	9		Recovery regeneration failure
	7		Recovery regeneration is inhibited

Chapter 9 Illustrated Parts List

9.0 About the Illustrated Parts List

The Illustrated Parts List (IPL) is designed to help technical service or maintenance personnel correctly identify orderable replacement parts.

The figure and table titles reference the part number (PN) to which they apply. The PNs for each of the Super Shot 125 Diesel Compressor Melter machine models are as follows:

- Super Shot 125 Diesel (70 CFM) Compressor Melter Skid PN 48300N

Illustrations are designed to show general shape and size of a part and the relationship that part has to other parts. Actual size and shape of parts or components may differ or vary from the actual part or component.

9.1 Ordering Crafco Parts

Crafco distributors and Crafco Pavement Preservation Supply Centers are strategically located throughout the United States. Parts can be ordered from your local Crafco distributor or directly from Crafco if a distributor is not available in your area.
When ordering parts, provide the following information:

- Part Number
- Machine Model
- Serial Number

Call or Email Crafco at the following:
Crafco Customer Service
Phone: (602) 276-0406
CustomerService@Crafco.com

Visit our website at www.crafco.com

©2026 by Crafco All Rights Reserved

9.2 Super Shot 125 Diesel (70 CFM) Compressor Melter Skid

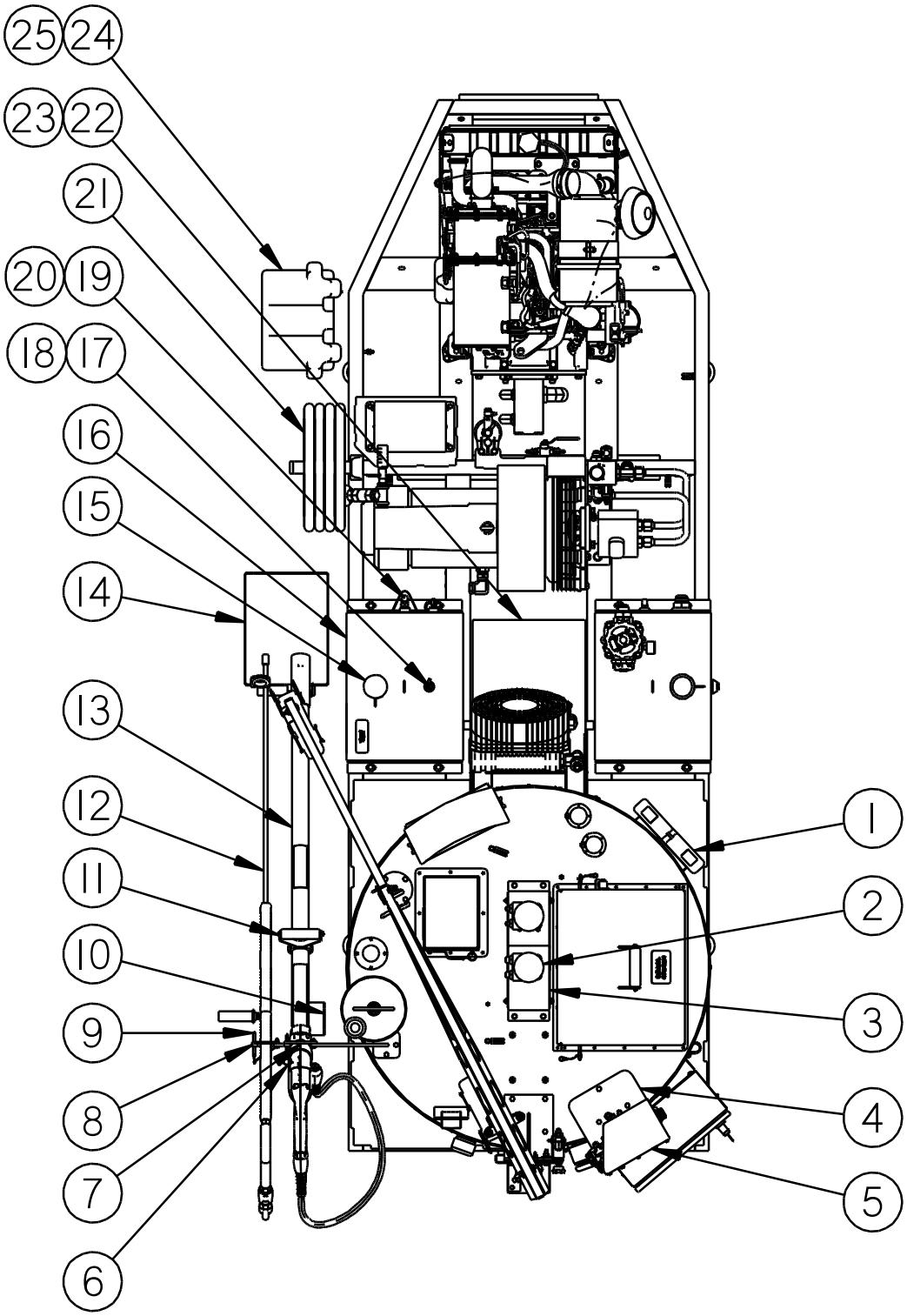

Fig. 9-1 Super Shot 125 Diesel (70 CFM) Compressor Melter Skid

©2026 by Crafco All Rights Reserved

Chapter 9 Illustrated Parts List

Table 9-1 Super Shot 125 Diesel (70 CFM) Compressor Melter Skid

FIG.	ITEM	PART NO.	DESCRIPTION	QTY.
Fig. 9-1	1	25289	RECORD BOX	1
	2	44832	PUMP / AGITATOR MOTOR ASSEMBLY	1
	3	43727	CHAIN GUARD ASSEMBLY	2
	4	52536N	MOUNT, HYDRAULIC VALVE	1
	5	52535N	ANGLED COVER, CONTROL VALVE	1
	6	45559	LOCKING ARM, WAND SUPPORT	1
	7	26104	¼ X 2.5 GRIP QUICK RELEASE PIN	1
	8	45755	AIR LANCE HOLDER, LATCH	1
	9	26104	¼ X 2.5 GRIP QUICK RELEASE PIN	1
	10	45562	HOSE GUIDE	1
	11	43768	WAND HANDLE	1
	12	47483N	LARGE FLOW COLD AIR LANCE	1
	13	52200	ELECTRIC HEATED WAND ASSEMBLY 48”	1
	14	43842	DRIP PAN ASSEMBLY	1
	15	43732N	CAP, NON-VENTED (DIESEL TANK)	1
	16	44737S	32 GALLON DOT FUEL TANK ASSEMBLY SALES	1
	17	43734N	SAFETY VENT	1
	18	29667N	VENT TUBE (NOT SHOWN)	1
	19	44818	TUBING, FUEL SIGHT GAUGE	2 FT
	20	44817	FITTING, SIGHT GAUGE ELBOW	2
	21	47482N	HOSE, 3/4" X 50' AIR	1
	22	43114	COVER, BURNER	1
	23	46380	14 VOLT BURNER	1
	24	24002	BATTERY BOX	1
	25	24000	12V BATTERY	1

©2026 by Crafco All Rights Reserved

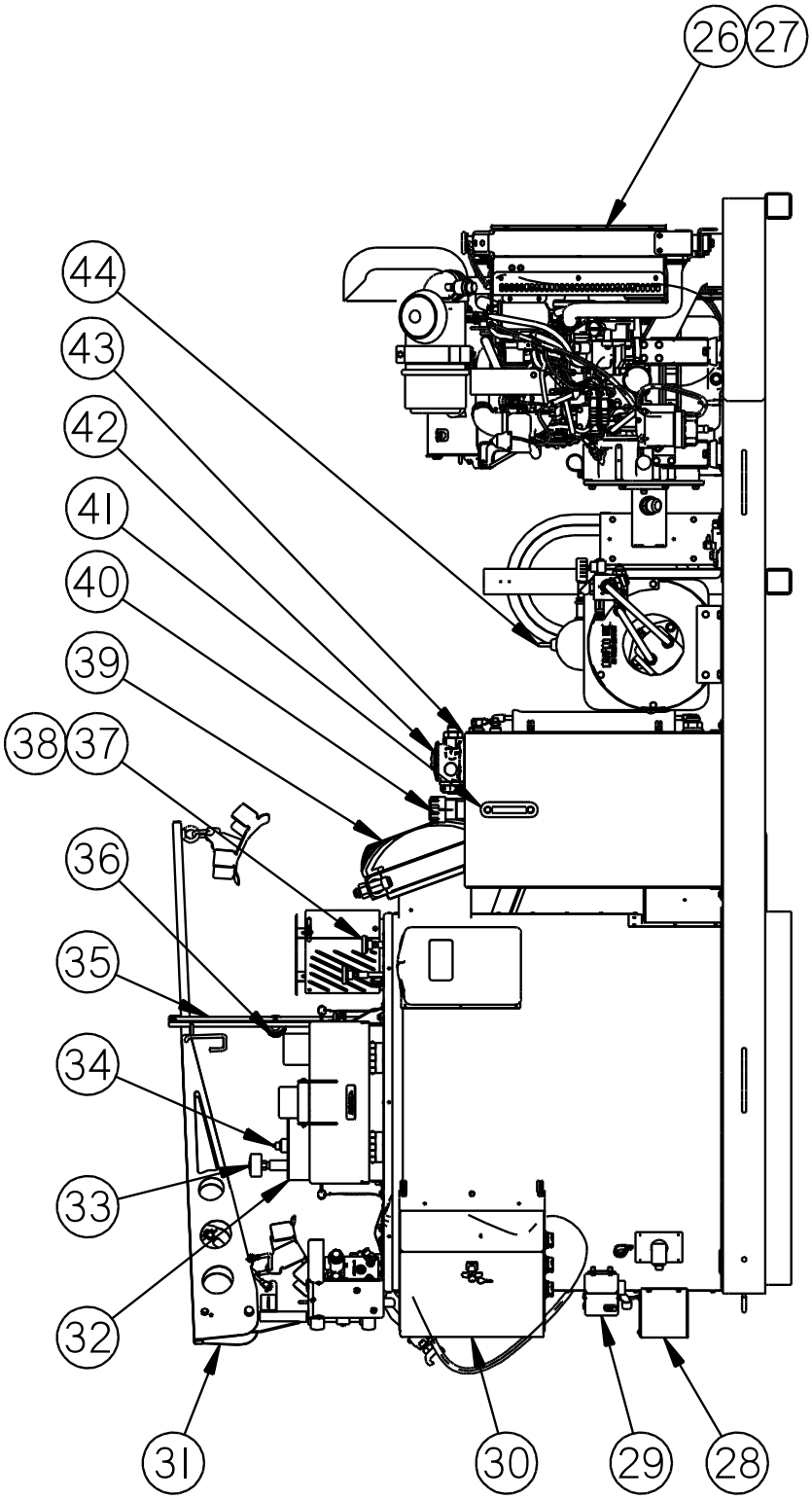

Fig. 9-2 Super Shot 125 Diesel (70 CFM) Compressor Melter Skid (continued)

Table 9-2 Super Shot 125 Diesel (70 CFM) Compressor Melter Skid (continued)

FIG.	ITEM	PART NO.	DESCRIPTION	QTY.
Fig. 9-2	26	48000N	43.4 HP YANMAR ENGINE ASSEMBLY	1
	27	48131N	ISOMOUNT (ENGINE TO FRAME NOT SHOWN)	4
	28	43821	HEAT GUARD	1
	29	44027	JUNCTION BOX ASSEMBLY	1
	30	47252N	CONTROL BOX -SS MODULAR, ECM/COMP	1
	31	52500N	BOOM ASSY, SS FLEX BOOM	1
	32	43355	OVERFLOW TANK	1
	33	26025	AIR BREATHER, HEAT TRANSFER OIL	1
	34	47475N	DIP STICK, HEAT TRANSFER OIL	1
	35	45582	BOOM LOCK ASSEMBLY	1
	36	46306	KNOB, THREADED BOOM LOCK	1
	37	43465	RTD SENSOR	2
	38	51065	CORD GRIP, RTD SENSOR	2
	39	45762	HYDRAULIC COOLER, LARGE	1
	40	43758N	CAP, VENTED (HYDRAULIC TANK)	1
	41	45415	SIGHT GAUGE, HYDRAULIC	1
	41a	45430	HYDRAULIC FILTER ASSEMBLY	1
	41b	45438	HYDRAULIC FILTER ELEMENT	-
	41c	45440	O-RING, HYDRAULIC FILTER	-
	41d	45441	GASKET, HYDRAULIC FILTER	-
	42	45437	GAUGE, HYDRAULIC FILTER	-
	43	43590S	HYDRAULIC TANK ASSEMBLY SALES	1
	44	45345	COMPRESSOR ASSEMBLY	1

©2026 by Crafco All Rights Reserved

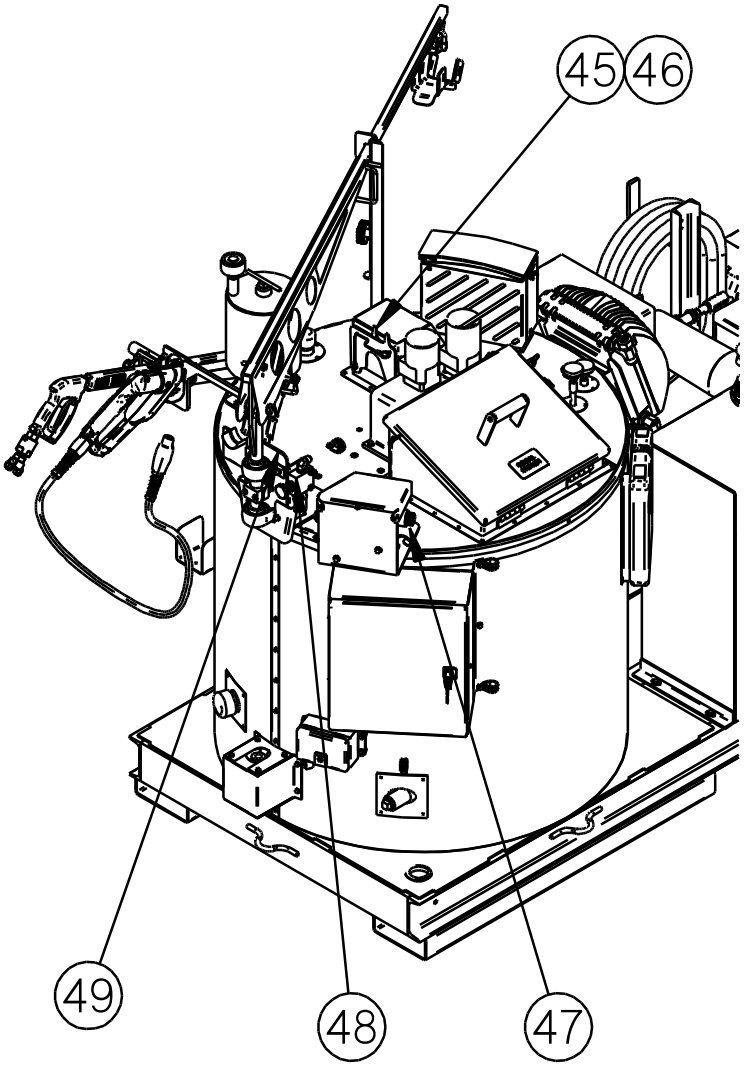

Fig. 9-3 Super Shot 125 Diesel (70 CFM) Compressor Melter Skid (continued)

Table 9-3 Super Shot 125 Diesel (70 CFM) Compressor Melter Skid (continued)

FIG.	ITEM	PART NO.	DESCRIPTION	QTY.
Fig. 9-3	45	47247N	FULL CLOSE SHOE BOX COVER	1
	46	47277N	COVER SHOE BOX ZINC PLATED	1
	47	45420	HYDRAULIC VALVE ASSEMBLY	1
	48	46060	FLOW CONTROL VALVE	1
	49	45579	BOOM SUPPORT ASSY.	1
	50	27170	3/8” ROUND SEALING TIP	OPT.
	51	27171	½” ROUND SEALING TIP	OPT.
	52	27173	¾” SEALING SHOE	OPT.
	53	27146	¼” ELONGATED SEALING TIP	OPT.
	54	43672	MOUNT, STROBE LIGHT	OPT.
	55	24095	STROBE LIGHT	OPT.
	56	31512	30 AMP CIRCUIT BREAKER (NOT SHOWN)	2
	57	24190	OVERNIGHT HEATER ROD	OPT.
	58	51756	DUCKBILL TIP (NOT SHOWN)	1
	59	27162R	3” DISK WITH RESTRICTOR	OPT.
	60	27163R	4” DISK WITH RESTRICTOR	OPT.

©2026 by Crafco All Rights Reserved

9.3 Tank Assembly

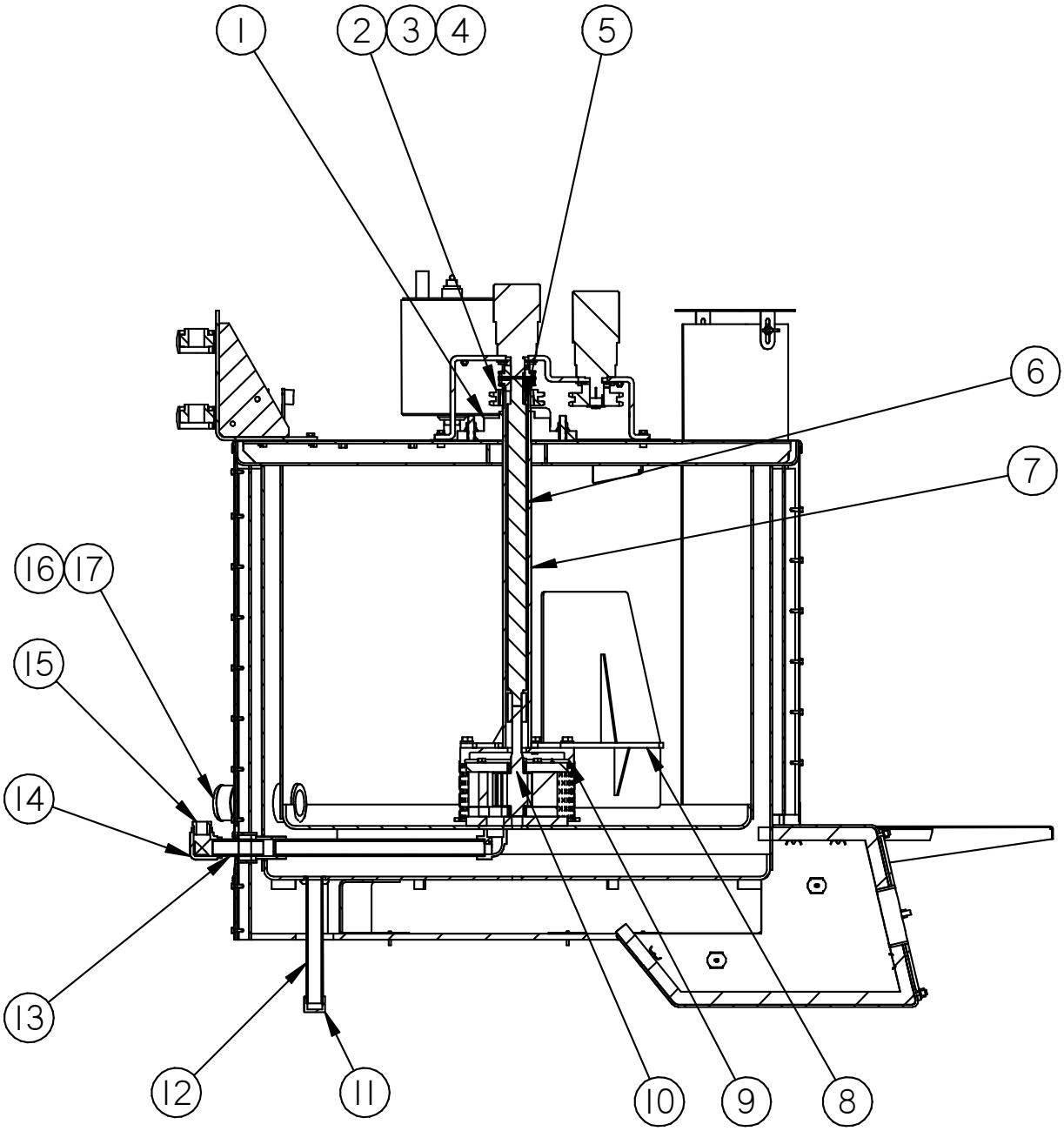

Fig. 9-4 Tank Assembly: All Models

Table 9-4 Tank Assembly: All Models

FIG.	ITEM	PART NO.	DESCRIPTION	QTY.
Fig. 9-4	1	43760	BEARING, FLANGED	1
	2	43321	CHAIN DRIVE	1
	3	44163	KEY, SPROCKET	1
	4	44165	SPROCKET DRIVEN	1
	5	47970N	WASHER, ALIGNMENT (PLASTIC)	1
	6	43641	SHAFT, DRIVE PUMP	1
	7	43753	SHAFT AGITATOR	1
	8	43649	PADDLE AGITATOR	2
	9	43655	SCREEN PUMP	1
	10	44850	PUMP, MATERIAL	1
	11	28270	1” PIPE CAP	1
	12	28132	1” X 10” LONG PIPE NIPPLE	1
	13	28039	1” X 4” LONG PIPE NIPPLE	1
	14	28210	1” PIPE ELBOW	1
	15	28351	1” X ¾” REDUCER BUSHING	1
	16	28046	2” X 4” LONG PIPE NIPPLE	1
	17	28273	2” PIPE CAP	1

©2026 by Crafco All Rights Reserved

9.4 Control Box Assembly, PN 47252N

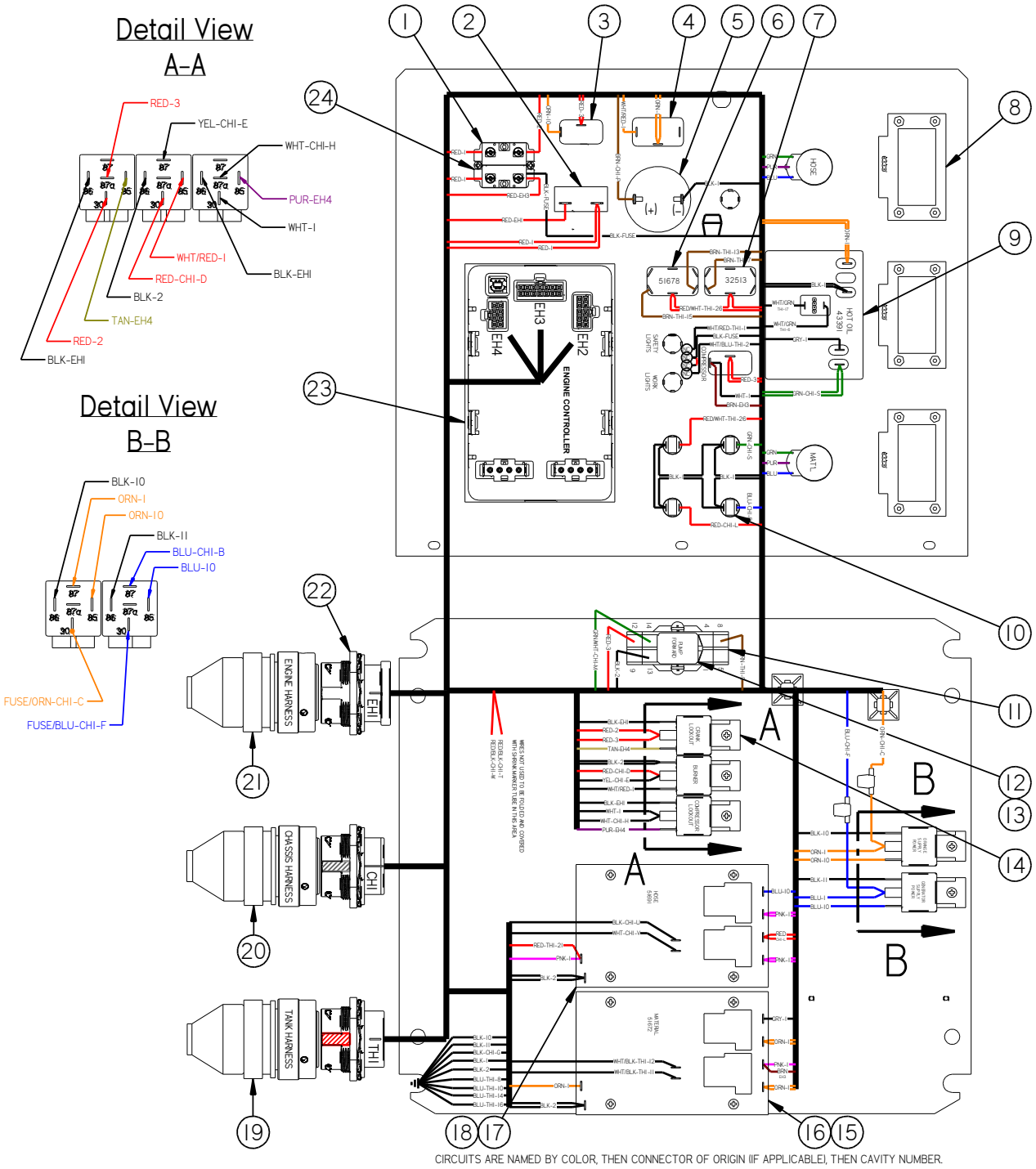

Fig. 9-5 Control Box Assembly, PN 47252N

Table 9-5 Control Box Assembly, PN 47252N

FIG.	ITEM	PART NO.	DESCRIPTION	QTY.
Fig. 9-5	1	51852	CONTACT BLOCK, N.O.	2
	2	51665	CIRCUIT BREAKER, 15 AMP	1
	3	50719	TOGGLE SWITCH, SPST ON-OFF	1
	4	52338	TOGGLE SWITCH, SPDT ON-(ON)	1
	5	46494	ALARM, PIEZO	1
	6	51678	TOGGLE SWITCH, SPDT ON-OFF-(ON)	1
	7	32513	TOGGLE SWITCH, DPDT (ON)-OFF(ON)	1
	8	50251	DIGITAL READOUT	3
	9	43391	TEMPERATURE CONTROLLER, 150F-550F	1
	10	51651	LIGHT, 12VDC	4
	11	51662	SOCKET, RELAY	1
	12	51661	RELAY, DPDT	1
	13	51663	SPRING, RELAY HOLD DOWN	1
	14	51673	RELAY, SPDT	5
	15	51670	SPACER, CONTROLLER	4
	16	51672	TEMPERATURE CONTROLLER, 400F/275F	1
	17	51670	SPACER, CONTROLLER	4
	18	51691	TEMPERATURE CONTROLLER, 400F/325F	1
	19	38305N	HARNESS, TANK	1
	20	38205N	HARNESS, CHASSIS	1
	21	45970	HARNESS, ENGINE CONTROL	1
	22	45954	PANEL NUT	3
	23	38090N	ENGINE CONTROLLER, D.E.C.	1
	24	46239	SWITCH, ON-OFF W/KEY (FRONT PANEL)	1
	25	50593	KNOB, TEMP CONTROL (FRONT PANEL)	3
	26	38050N	ENCLOSURE, CONTROL BOX (NOT SHOWN)	1
	27	51684	RIBBON CABLE, 36” (NOT SHOWN)	2
	28	51698	RIBBON CABLE, 5” (NOT SHOWN)	1

©2026 by Crafco All Rights Reserved

9.5 Engine Assembly: PN 48000N

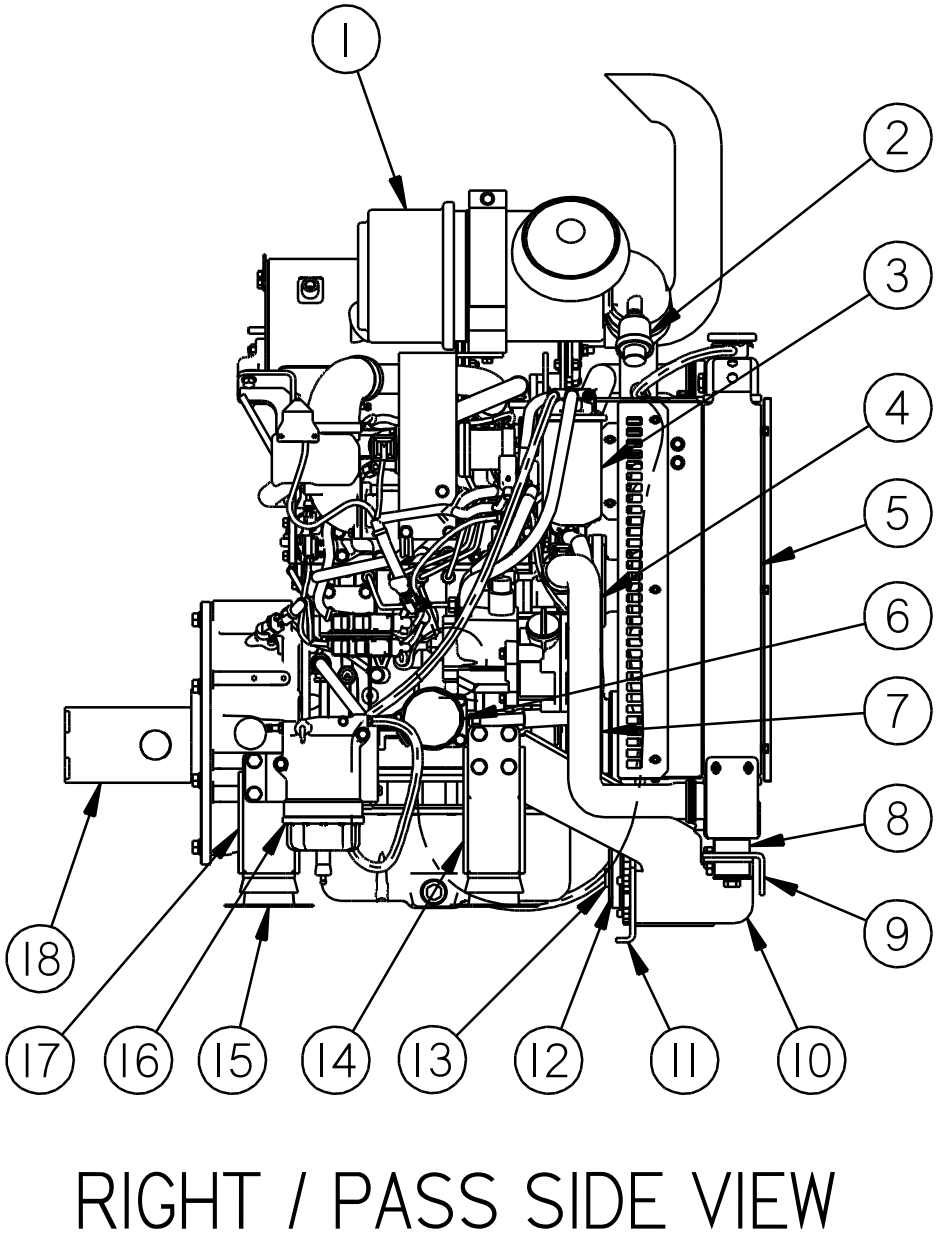

Fig. 9-6 Engine Assembly: PN 48000N

Table 9-6 Engine Assembly: PN 48000N

FIG.	ITEM	PART NO.	DESCRIPTION	QTY.
Fig. 9-6	1	47169N	AIR FILTER ELEMENT	1
	2	48113N	RESTRICTION INDICATOR	1
	3	48143N	FUEL FILTER, SECONDARY NEAR RADIATOR	1
	4	48146N	LOWER RADIATOR HOSE	1
	5	48148N	RADIATOR	1
	6	48144N	OIL FILTER	1
	7	48102N	PULLEY - GENERATOR	1
	8	48135N	ISOLATOR, LOWER RADIATOR	2
	NS	48134N	ISOLATOR, UPPER RADIATOR	1
	9	48104N	BRACKET- RADIATOR LOWER, CROSSPIECE	1
	10	48101N	BRACKET-RADIATOR LOWER PS SUPPORT	1
	11	48103N	BRACKET - GENERATOR	1
	12	46322	HOSE GENERATOR	1
	13	45748N	GENERATOR BELT	1
	14	48110N	FRONT ENGINE FOOT	2
	15	48141N	ENGINE ISOMOUNT	4
	16	48162N	FUEL FILTER, INSIDE WATER SEPARATOR	1
	17	48111N	REAR ENGINE FOOT	2
	18	57310	HYDRAULIC PUMP	1

©2026 by Crafco All Rights Reserved

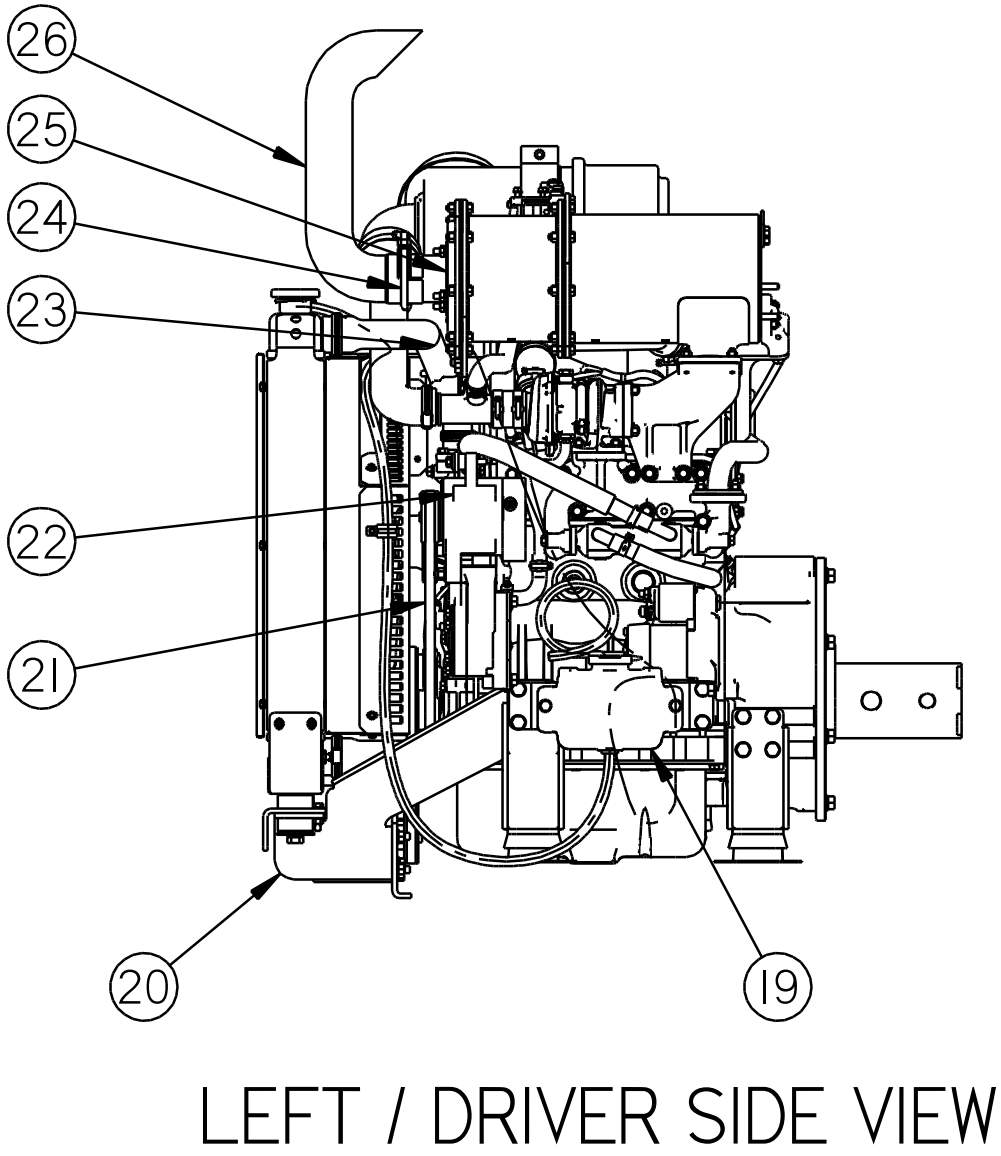

Fig. 9-7 Engine Assembly: PN 48000N (continued)

Table 9-7 Engine Assembly: PN 48000N (continued)

FIG.	ITEM	PART NO.	DESCRIPTION	QTY.
Fig. 9-7	NS	48141N	ISOLATOR / ISOMOUNT, ENGINE FOOT	4
	19	48136N	COOLANT OVERFLOW BOTTLE	1
	NS	48162NW	WRENCH, FUEL FILTER HOUSING	1
	20	48100N	BRACKET-RADIATOR LOWER DS SUPPORT	1
	21	48161N	V-BELT, ENGINE ACCESSORY	1
	22	48160N	ALTERNATOR, ENGINE	1
	23	48145N	UPPER RADIATOR HOSE	1
	24	48140N	EXHAUST CLAMP	1
	25	48116N	EXHAUST FLANGE	1
	26	48117N	EXHAUST PIPE	1
	NS	48205N	WIRING HARNESS, YANMAR KPH8	1
	NS	48108N	COVER, ECM ENCLOSURE	2
	NS	48107N	FRAME, ECM ENCLOSURE	1
	NS	48106N	CENTER PANEL, ECM ENCLOSURE	1
	NS	48109N	ISOLATOR / ISOMOUNT, ECM	4

©2026 by Crafco All Rights Reserved

9.6 Hydraulic Control Valve Assembly: PN 45420

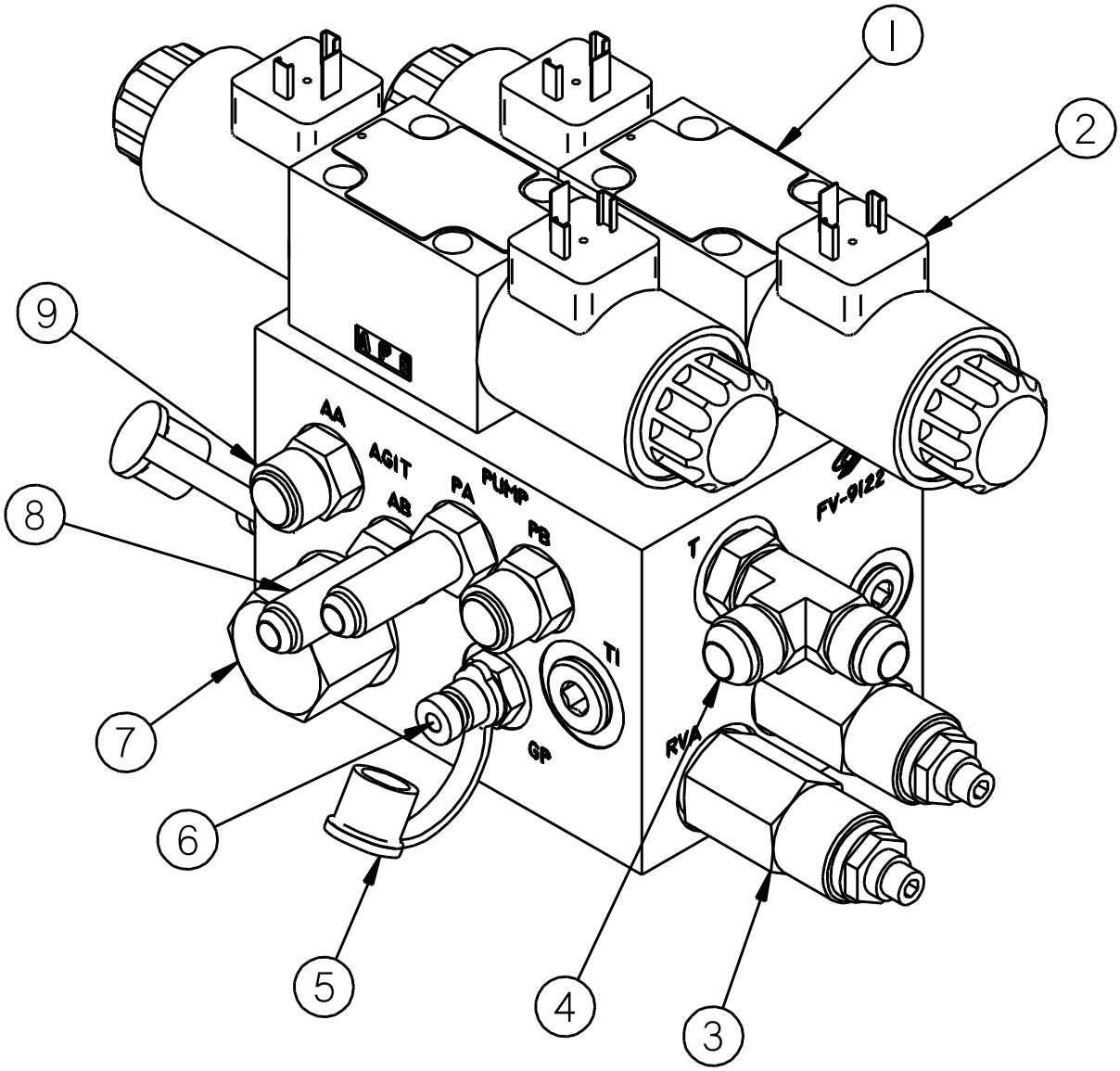

Fig. 9-8 Hydraulic Control Valve Assembly: PN 45420

Table 9-8 Hydraulic Control Valve Assembly: PN 45420

FIG.	ITEM	PART NO.	DESCRIPTION	QTY.
Fig. 9-8	1	45418	VALVE, DIRECTIONAL REXROTH	2
	2	45436	COIL, DIRECTIONAL VALVE REXROTH	4
	3	45417	VALVE RELIEF	2
	4	29897	FITTING, #8 ORB X #8 MALE JIC STR	1
	5	45413	DUST CAP	2
	6	45414	FITTING, TEST PORT	2
	7	45416	FLOW CONTROL, PRIORITY	1
	8	40308	FITTING, #6 ORB X #6 MALE JIC STR	2
	9	29919	FITTING, #6 ORB X #8 MALE JIC STR	2

©2026 by Crafco All Rights Reserved

9.7 Material Flow Control Assembly: PN 46060

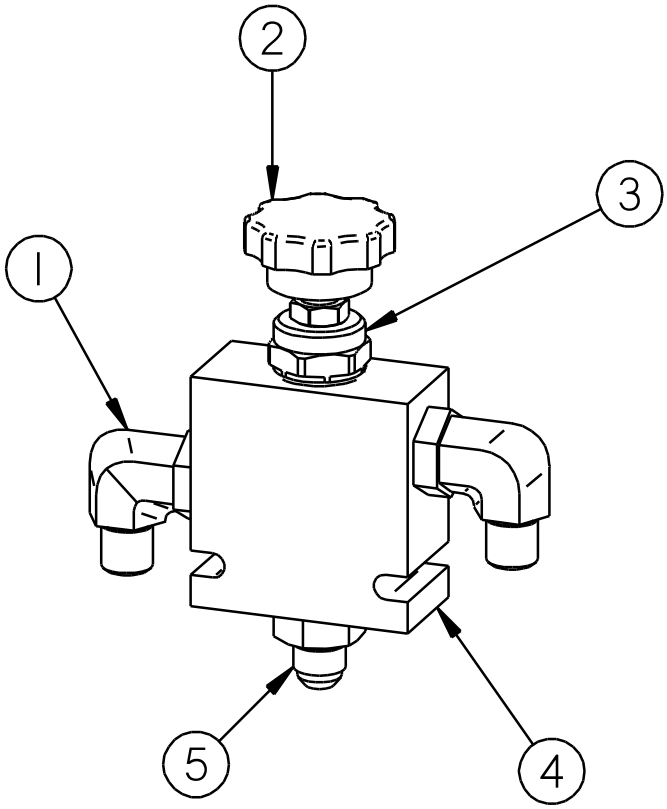

Fig. 9-9 Material Flow Control Assembly: PN 46060

Table 9-9 Material Flow Control Assembly: PN 46060

FIG.	ITEM	PART NO.	DESCRIPTION	QTY.
Fig. 9-9	1	29869	3/8” TUBE X 1/2” O-RING ELBOW	2
	2	46077	KNOB ONLY	1
	3	45431	CARTRIDGE, FLOW CONTROL (WITH KNOB)	1
	4	46060	HYDRAULIC FLOW CONTROL (NO FITTINGS)	1
	5	29998	3/8” TUBE X 1/2” O-RING ADAPTOR	1

©2026 by Crafco All Rights Reserved

9.8 Pump/Mixer Motor Assembly: PN 44832

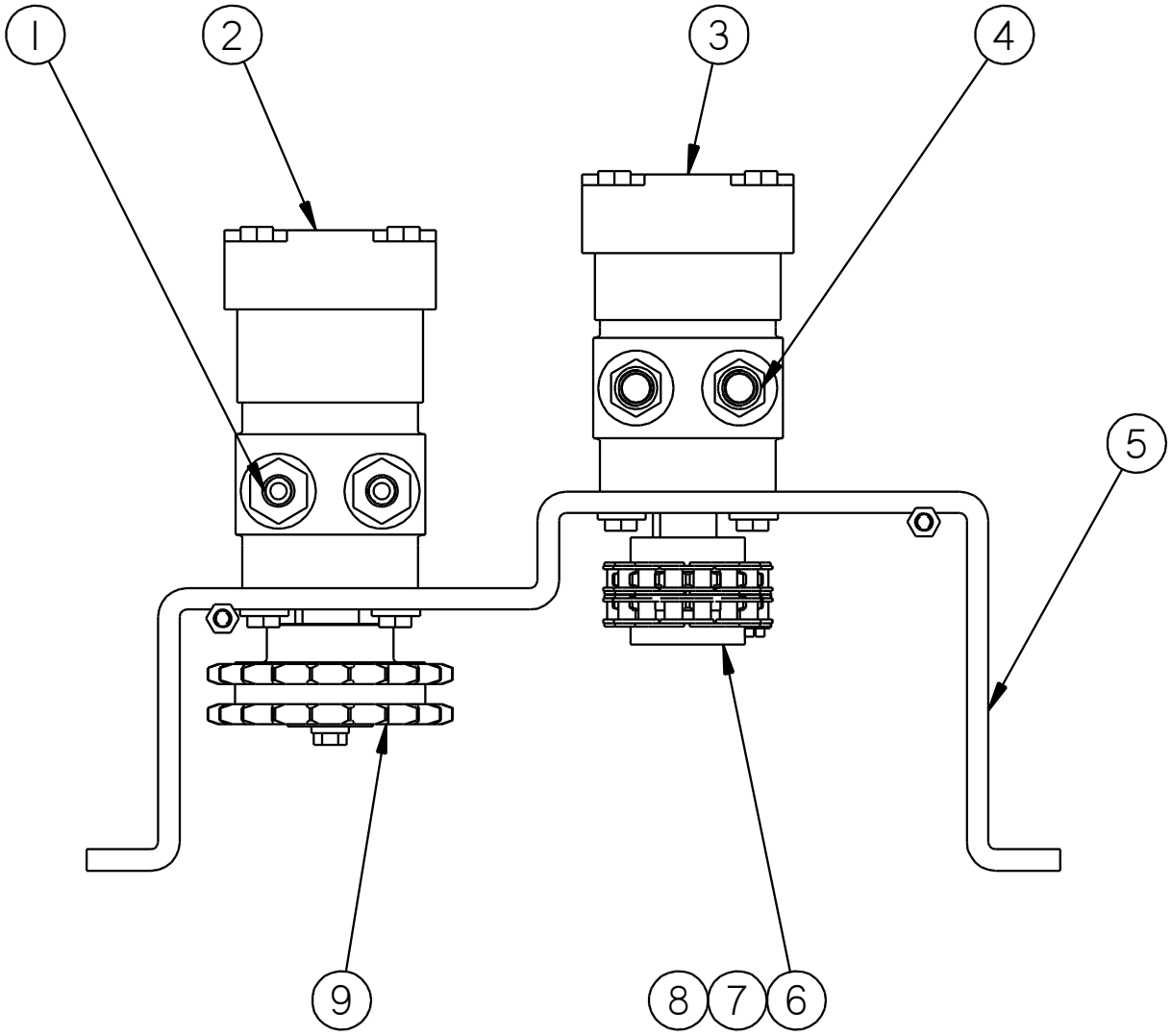

Fig. 9-10 Pump/Mixer Motor Assembly: PN 44832

Table 9-10 Pump/Mixer Motor Assembly: PN 44832

FIG.	ITEM	PART NO.	DESCRIPTION	QTY.
Fig. 9-10	1	22029	3/8” TUBE X 5/8” O-RING ADAPTOR	2
	2	22027	HYDRAULIC MOTOR, MIXER	1
	3	44809	HYDRAULIC MOTOR, PUMP	1
	4	29913	1/2” TUBE X 5/8” O-RING ADAPTOR	2
	5	43345	MOUNTING BRACKET MOTORS	1
	6	26002	SPROCKET CHAIN COUPLING	2
	7	26016	CHAIN COUPLING	1
	8	26030	CONNECTING LINK CHAIN	1
	9	43323	SPROCKET MIXER DRIVE	1

©2026 by Crafco All Rights Reserved

9.9 Diesel Burner Assembly: PN 46380

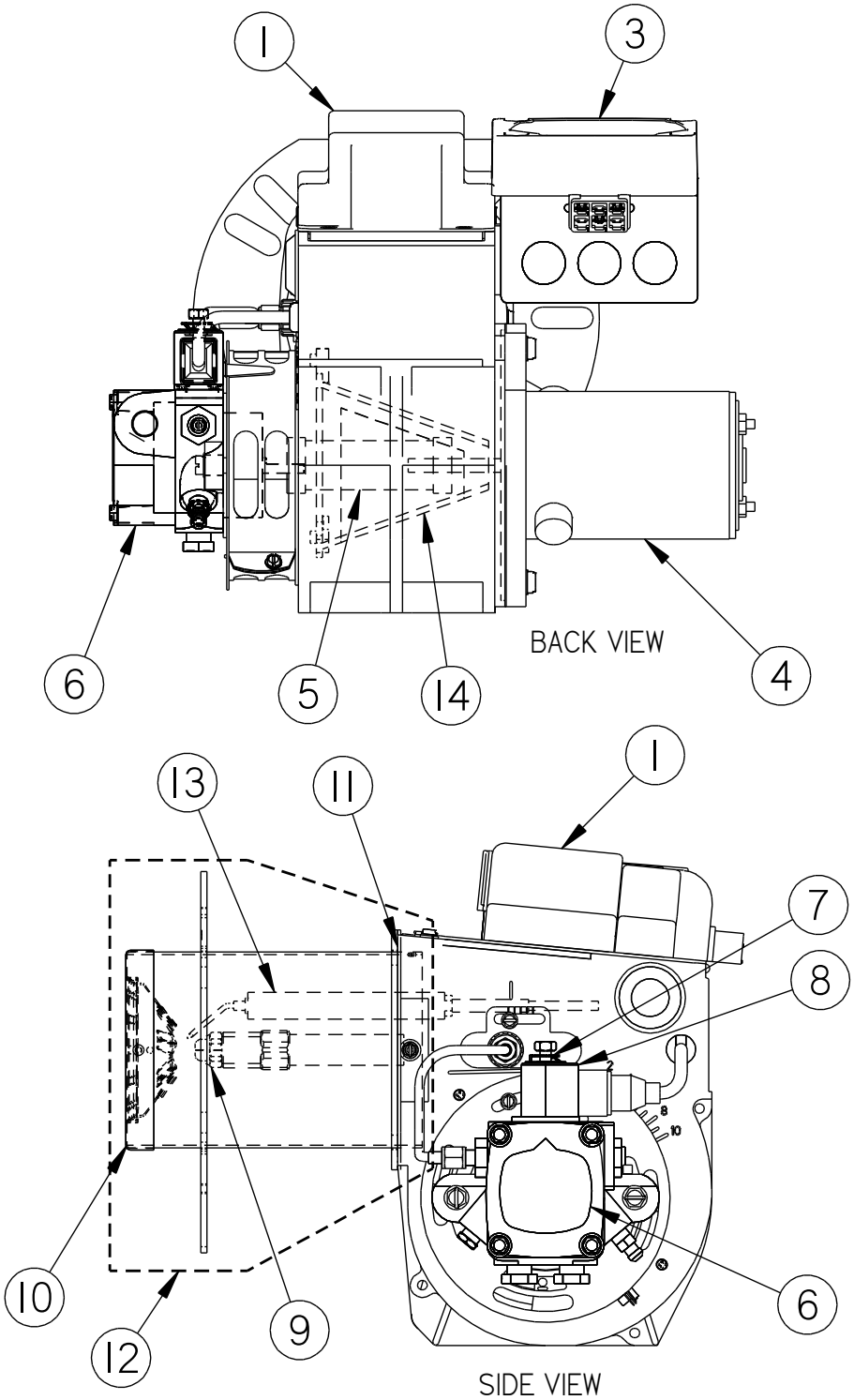

Fig. 9-11 Diesel Burner Assembly: PN 46380

Table 9-11 Diesel Burner Assembly: PN 46380

FIG.	ITEM	PART NO.	DESCRIPTION	QTY.
Fig. 9-11	1	41949	IGNITION TRANSFORMER	1
	2	41870	CAD EYE (NOT SHOWN)	1
	3	42335	DC CONTROLLER	1
	4	41890	BLOWER MOTOR	1
	5	41970	COUPLING, FUEL PUMP	1
	6	41892	PUMP, FUEL	1
	7	41932	VALVE STEM, FUEL SOLENOID	1
	8	41933	COIL, FUEL SOLENOID	1
	9	41883	NOZZLE 1.5X80B	1
	10	41953N	STD HEAD, F22, BURNER	1
	11	41964N	GASKET, AIR TUBE TO HOUSING	1
	12	46381N	AIR TUBE W/ HEAD & ELECTRODE MOUNT	1
	13	41993	ELECTRODE ASSY (COMES WITH 2)	1
	14	41966N	AIR GUIDE, BURNER	1

©2026 by Crafco All Rights Reserved

9.10 Hydraulic Diagram: PN 26663

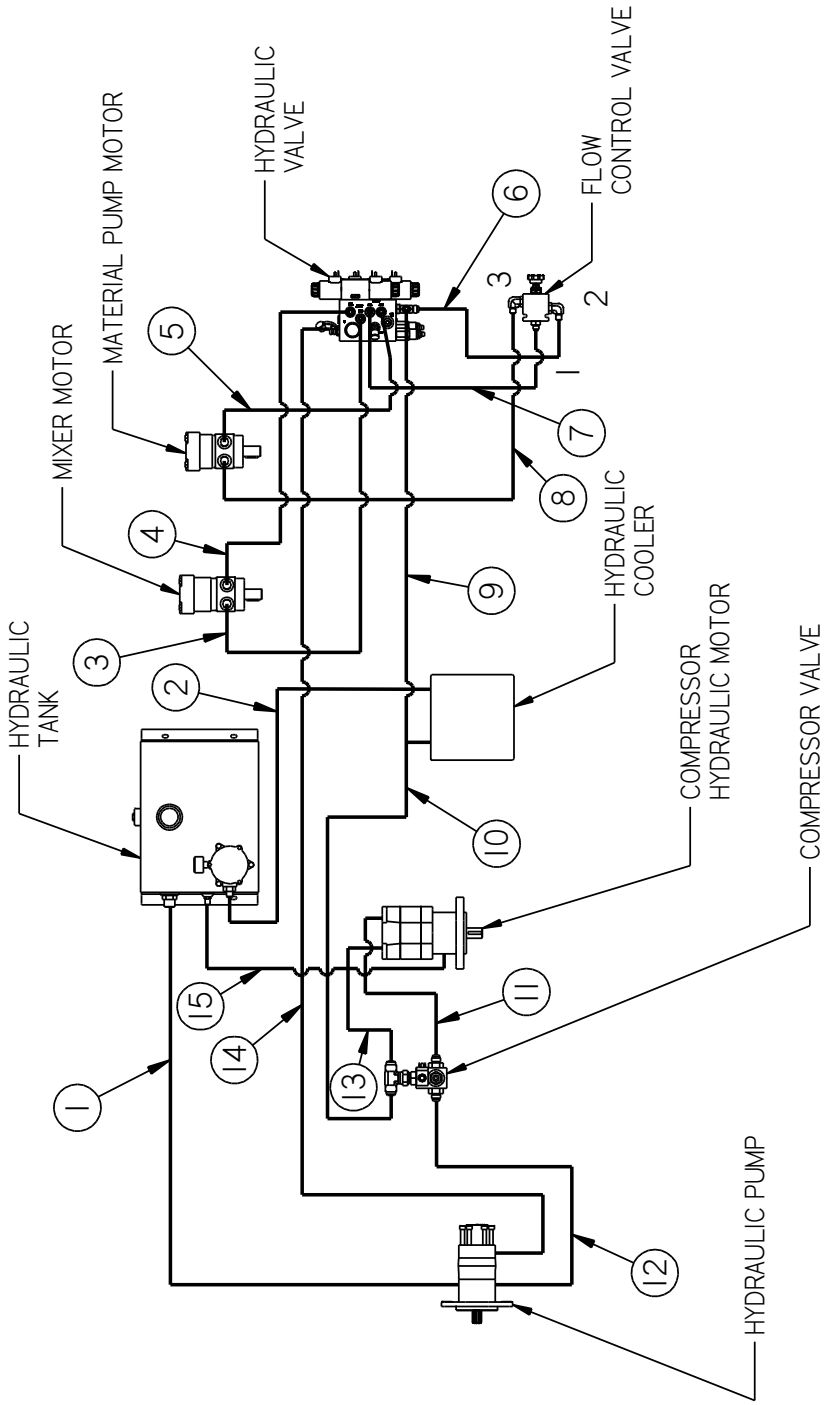

Fig. 9-12 Hydraulic Diagram: PN 26663

Table 9-12 Hydraulic Diagram: PN 26663

FIG.	ITEM	PART NO.	DESCRIPTION	QTY
Fig. 9-12	1	**HYDRAULIC RESERVOIR TO HYDRAULIC PUMP SUCTION PORT**		
		29885	FITTING, #20 ORB X #20 JIC	REF
		20GMVPLUS 20G-20FJX 20G-20FJX 30	HYDRAULIC HOSE	1
		29888	FITTING, #20 ORB X #20 JIC 45°	REF
	2	**HYDRAULIC COOLER CURBSIDE TO HYDRAULIC RETURN FILTER**		
		29824	FITTING, #16 ORB X #16 JIC ELBOW	REF
		16M3K 16G-16FJX90S 16G-16FJX 32	HYDRAULIC HOSE	1
		29818	FITTING, #20 ORB X #16 JIC	REF
	3	**MIXER MOTOR TO HYDRAULIC VALVE “AB” PORT**		
		22029	FITTING, #10 ORB X #6 JIC	REF
		6M3K 6G-6FJX 6G-6FJX90L 36	HYDRAULIC HOSE	1
		40311	FITTING, #6 ORB X #6 JIC	REF
	4	**HYDRAULIC VALVE “AA” PORT TO MIXER MOTOR**		
		29919	FITTING, #6 ORB X #8 JIC	REF
		6M3K 6G-8FJX 6G-6FJX90S 34	HYDRAULIC HOSE	1
		22029	FITTING, #10 ORB X #6 JIC	REF
	5	**HYDRAULIC VALVE “PB” PORT TO MATERIAL PUMP MOTOR**		
		29896	FITTING, #8 ORB X #8 JIC ELBOW	REF
		8M3K 8G-8FJX 8G-8FJX90S 22	HYDRAULIC HOSE	1
		29932	FITTING, #8 ORB X #8 JIC RUN TEE	REF
	6	**FLOW CONTROL VALVE “2” TO HYDRAULIC VALVE “T”PORT**		
		29896	FITTING, #8 ORB X #8 JIC ELBOW	REF
		8M3K 8G-8FJX 8G-6FJX90S 22	HYDRAULIC HOSE	1
		29932	FITTING, #8 ORB X #8 JIC RUN TEE	REF

©2026 by Crafco All Rights Reserved

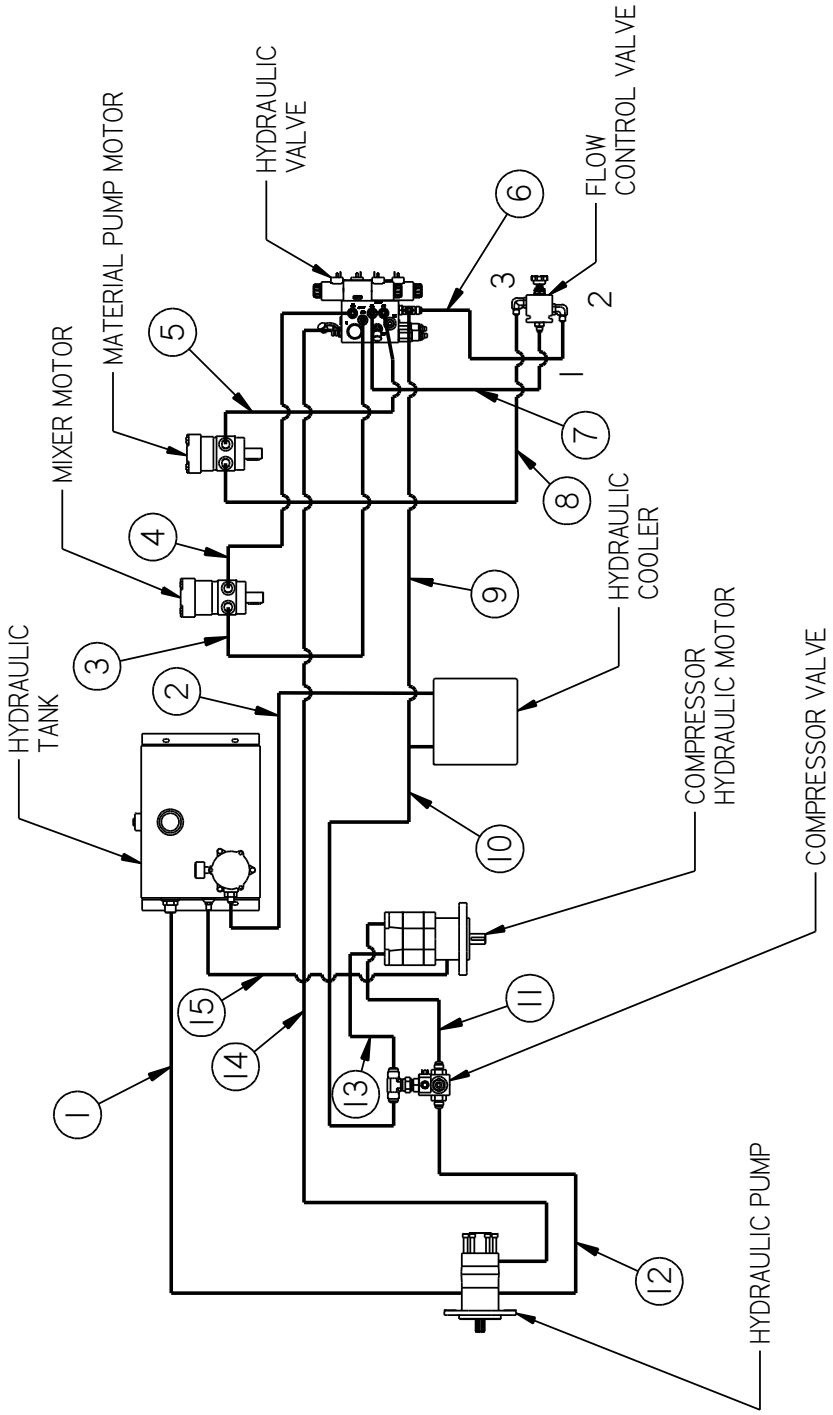

Fig. 9-13 Hydraulic Diagram: PN 26663 (continued)

Table 9-13 Hydraulic Diagram: PN 26663 (continued)

FIG.	ITEM	PART NO.	DESCRIPTION	QTY
Fig. 9-13	7	**FLOW CONTROL VALVE "1" TO HYDRAULIC VALVE "PA" PORT**		
		29897	FITTING, #8 ORB X #8 JIC	REF
		8M3K 8G-8FJX 8G-6FJX 16	HYDRAULIC HOSE	1
		40311	FITTING, #6 ORB X #6 JIC	REF
	8	**FLOW CONTROL VALVE "3" TO MATERIAL PUMP MOTOR**		
		29896	FITTING, #8 ORB X #8 JIC	REF
		8M3K 8G-8FJX 8G-8FJX90L 30	HYDRAULIC HOSE	1
		29913	FITTING, #10 ORB X #8 JIC	REF
	9	**HYDRAULIC VALVE "T" PORT TO HYDRAULIC COOLER ROADSIDE**		
		29896	FITTING, #8 ORB X #8 JIC	REF
		8M3K 8G-8FJX 8G-12FJX 63	HYDRAULIC HOSE	1
		27692	#16 FEMALE TUBE X #12 JIC	REF
		29977	#16 O-RING BRANCH TEE	REF
	10	**COMPRESSOR VALVE "2" PORT TO HYDRAULIC COOLER ROADSIDE**		
		29900	#12 O-RING RUN TEE	REF
		27693	#12 JIC X #16 JIC ADAPTOR	REF
		16M3K 16G-16FJX90S 16G-16FJX 66	HYDRAULIC HOSE	1
		29977	#16 O-RING BRANCH TEE	REF
	11	**COMPRESSOR VALVE "1" PORT TO COMPRESSOR MOTOR**		
		29821	FITTING, #12 ORB X #10 JIC	REF
		10M3K 10G-12FJX 10G-10FJX90S 23	HYDRAULIC HOSE	1
		29819	FITTING, #12 ORB X #12 JIC	REF
	12	**HYDRAULIC PUMP PRESSURE FRONT PORT TO COMPRESSOR VALVE "1" PORT**		
		29916	FITTING, #12 ORB X #12 JIC ELBOW	REF
		10M3K 10G-12FJX 10G-10FJX90S 28	HYDRAULIC HOSE	1
		29821	FITTING, #12 ORB X #10 JIC	REF

©2026 by Crafco All Rights Reserved

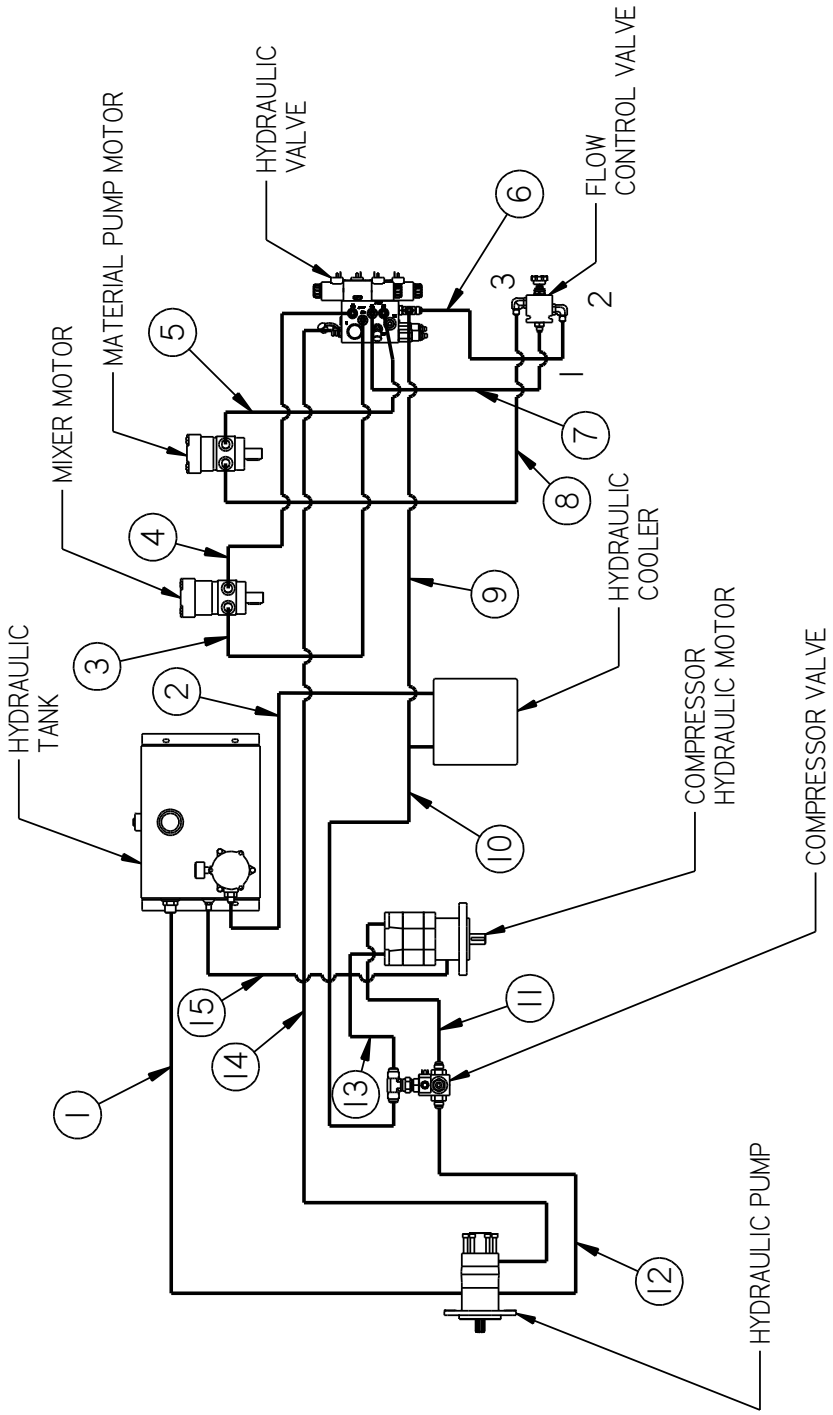

Fig. 9-14 Hydraulic Diagram: PN 26663 (continued)

Table 9-14 Hydraulic Diagram: PN 26663 (continued)

FIG.	ITEM	PART NO.	DESCRIPTION	QTY
Fig. 9-14	**13**	**COMPRESSOR MOTOR TO COMPRESSOR VALVE "2" PORT**		
		29819	FITTING, #12 ORB X #12 JIC	REF
		12M3K 12G-12FJX 12G-12FJX 23	HYDRAULIC HOSE	1
		29900	#12 ORB X #12 JIC RUN TEE	REF
	14	**HYDRAULIC PRESSURE PORT REAR PORT TO HYDRAULIC VALVE "P" PORT**		
		29842	FITTING, #12 ORB X #10 JIC	REF
		8M3K 8G-8FJX90L 8G-10FJX 144	HYDRAULIC HOSE	1
		29897	FITTING, #8 ORB X #8 JIC	REF
	15	**COMPRESSOR HYDRAULIC MOTOR TO HYDRAULIC TANK**		
		29848	FITTING, #6 ORB X #6 JIC ELBOW	REF
		6M3K 6G-6FJX 6G-6FJX90S 22.75	HYDRAULIC HOSE	1
		29881	#6 JIC X #4 MALE PIPE ADAPTER	REF

©2026 by Crafco All Rights Reserved

9.11 Diesel Fuel Line Schematic

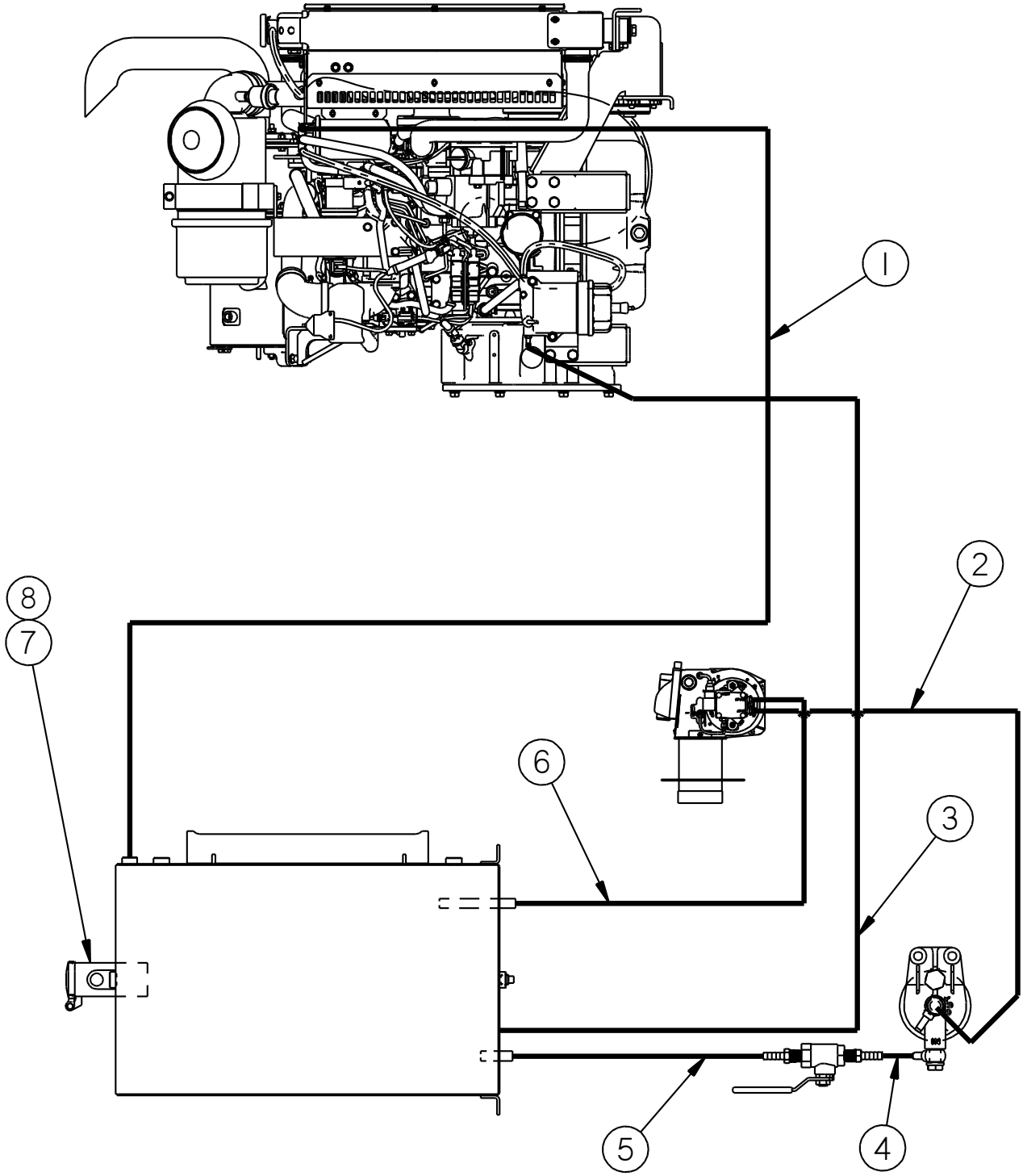

Fig. 9-15 Diesel Fuel Line Schematic

Table 9-15 Diesel Fuel Line Schematic

FIG.	ITEM	PART NO.	DESCRIPTION	QTY.
Fig. 9-15	**1. ENGINE RETURN LINE TO DIESEL FUEL TANK**			
		-	ENG INJECTOR. HOUSING, #6 HOSE PUSH-ON	REF.
		-	HOSE, 5/16	REF.
		47965N	HOSE, 5/16 x 137” FUEL LINE	1
		26767	FITTING, #5 HOSE PUSH-ON	1
		26782	FITTING, 1/4” MPT X 5/16 JIC ELBOW	1
		26080	CLAMP, GEAR	2
	2. BURNER FUEL FILTER TO BURNER INLET			
		-	BANJO FITTING	REF.
		29650N	HOSE ASSEMBLY, 5/16 X 55” FUEL LINE	1
		26767	FITTING, #5 HOSE PUSH-ON	1
		26756N	ADAPTER, 5/16 JIC X 1/4NPT	1
	3. DIESEL FUEL TANK TO WATER SEPARATOR			
		26782	FITTING, 1/4” MPT X 5/16 JIC ELBOW	1
		26767	FITTING, #5 HOSE PUSH-ON	1
		47662N	HOSE, 5/16 x 92” FUEL LINE	1
		-	WATER SEP. HOUSING, #6 HOSE PUSH-ON	REF.
	4. BALL VALVE TO BURNER FUEL FILTER			
		29984	HOSE BARB, 1/4MPT X 5/16 HOSE	1
		29648N	HOSE ASSEMBLY, 5/16 X 10” FUEL LINE	1
		47345N	FILTER ASSEMBLY	1

©2026 by Crafco All Rights Reserved

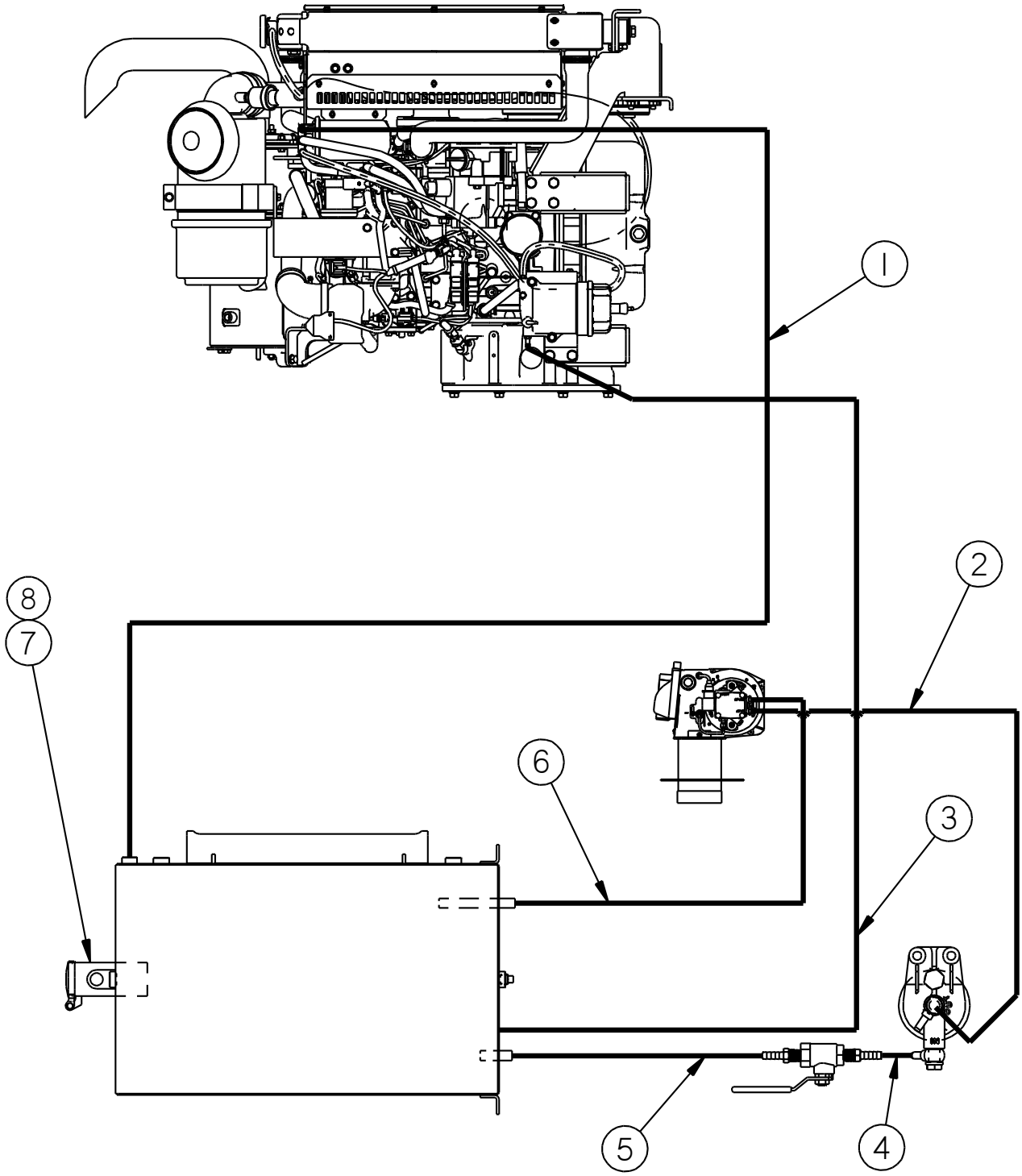

Fig. 9-16 Diesel Fuel Line Schematic (continued)

Table 9-16 Diesel Fuel Line Schematic (continued)

FIG.	ITEM	PART NO.	DESCRIPTION	QTY.
Fig. 9-16	**5. DIESEL TANK TO BALL VALVE**			
		26782	FITTING, 1/4” MPT X 5/16 JIC ELBOW	1
		26767	FITTING, #5 HOSE PUSH-ON	1
		29663N	HOSE ASSEMBLY, 5/16 X 107” FUEL LINE	1
		29984	HOSE BARB, 1/4MPT X 5/16 HOSE	1
	6. **BURNER RETURN TO DIESEL TANK**			
		26756N	ADAPTER, 5/16 JIC X 1/4NPT	1
		26767	FITTING, #5 HOSE PUSH-ON	1
		29590	HOSE ASSEMBLY, 5/16 X 80” FUEL LINE	1
		26767	FITTING, #5 HOSE PUSH-ON	1
		26782	FITTING, 1/4” MPT X 5/16 JIC ELBOW	1
	7	43732N	FILLER CAP, NON-VENTED FUEL TANK	1
	8	43733N	FUEL TANK FILLER NECK (NO CAP)	1

©2026 by Crafco All Rights Reserved

9.12 Electrical Schematic

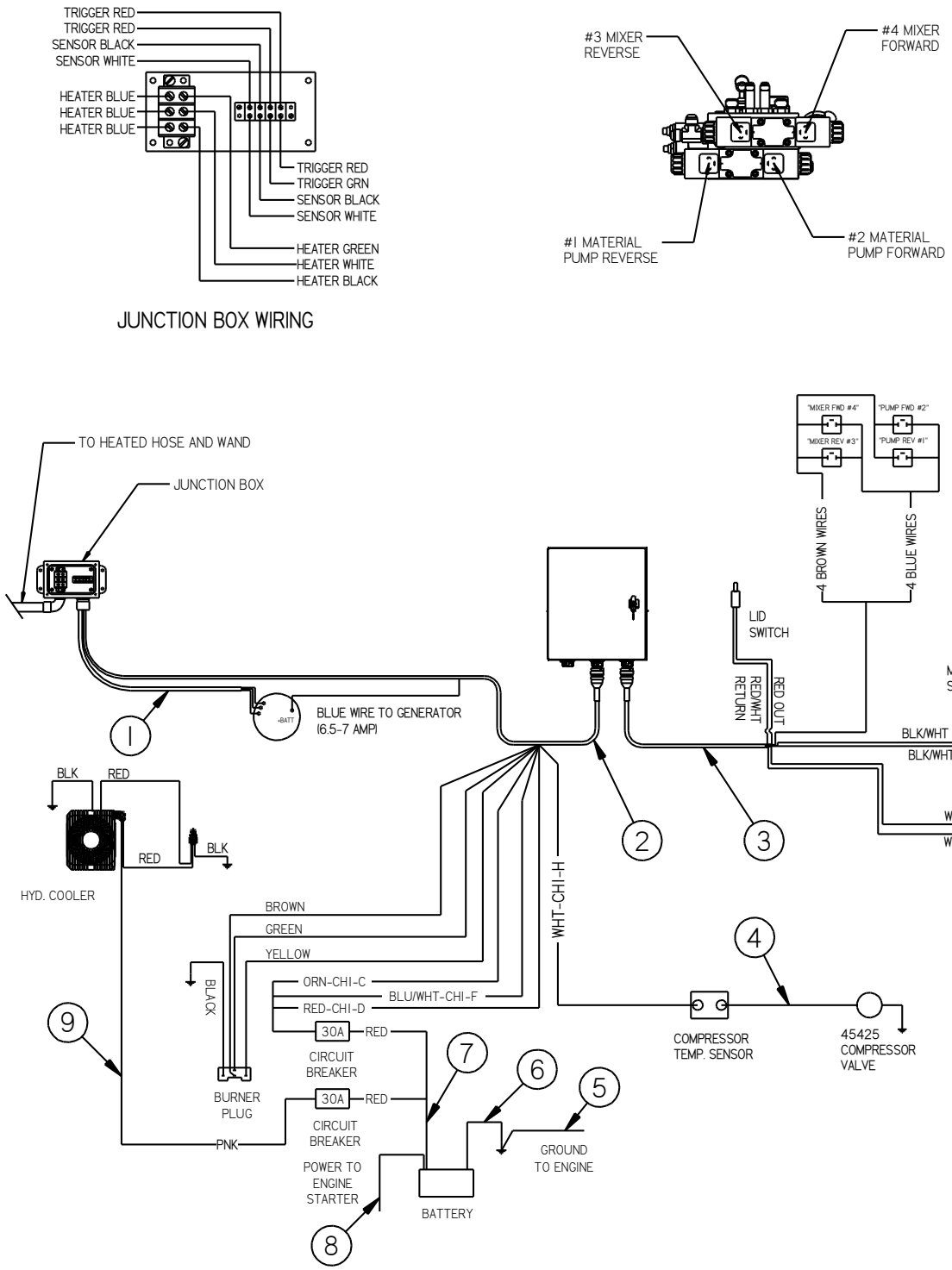

Fig. 9-17 Electrical Schematic

Table 9-17 Electrical Schematic

FIG.	ITEM	PART NO.	DESCRIPTION	QTY.
Fig. 9-17	1	47498N	HOSE CABLE ASSY, SS125DC100	1
	2	38230N	HARNESS - CHASSIS	1
	3	38330N	HARNESS - TANK	1
	4	43886	CABLE ASSEMBLY, COMPRESSOR VALVE	1
	5	52348N	BATTERY CABLE, ENGINE TO GROUND LUG	1
	6	52354N	BATTERY CABLE, NEGATIVE TO GROUND LUG	1
	7	52351N	WIRE ASSY, CIRCUIT BREAKER TO BATTERY	1
	8	52352N	BATTERY CABLE, POSITIVE TO ENGINE	1
	9	45569	HYDRAULIC COOLER WIRING HARNESS	1
	NS	45790	HARNESS - ENGINE EXT, DEC, 226"	1

©2026 by Crafco All Rights Reserved

9.13 Air Compressor Assembly: PN 45345

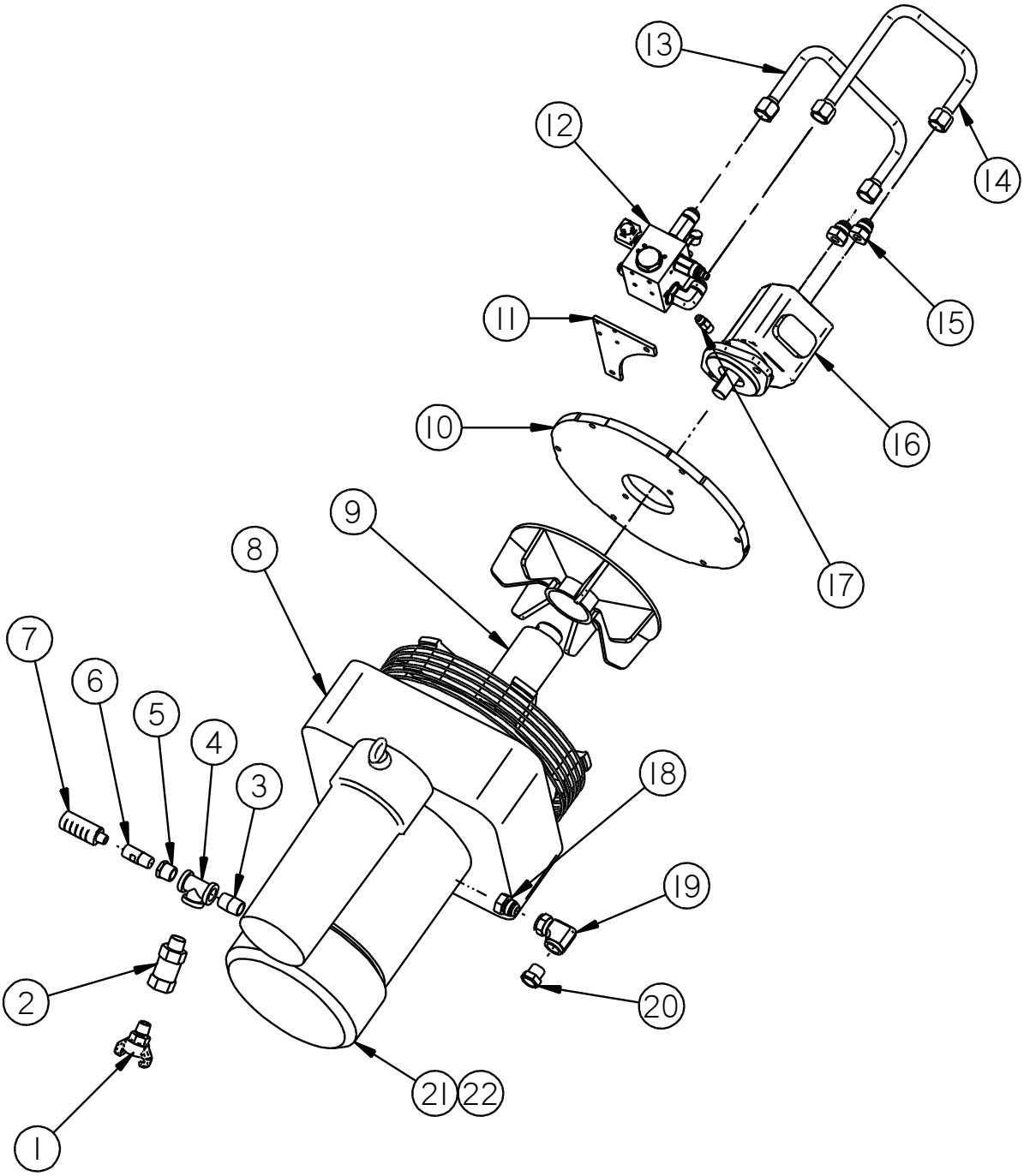

Fig. 9-18 Air Compressor Assembly: PN 45345

Table 9-18 Air Compressor Assembly: PN 45345

FIG.	ITEM	PART NO.	DESCRIPTION	QTY.
Fig. 9-18	1	47488N	FITTING, 3/4” NPT AIR HOSE	1
	2	47690N	3/4” SAFETY CHECK VALVE (160-180)	1
	3	28004	NIPPLE, 3/4” NPT PIPE	1
	4	28254	TEE, 3/4” NPT PIPE	1
	5	28355	3/4 x 1/2 GALV HEX HEAD PIPE BUSHING	1
	6	45564	NIPPLE, RESTRICTOR	1
	7	50267	MUFFLER, AIR	1
	8	45320	COMPRESSOR, ROTARY VANE	1
	9	45347	SHAFT, COMPRESSOR DRIVE	1
	10	45346	PLATE, MOTOR ADAPTER	1
	11	45327	MOUNTING PLATE, VALVE	1
	12	45425	VALVE, HYDRAULIC	1
	13	45476	RETURN LINE, COMPRESSOR	1
	14	45475	SUPPLY LINE, COMPRESSOR	1
	15	29819	FITTING, #12 ORB X #12 JIC STRAIGHT	2
	16	43874	MOTOR, HYDRAULIC	1
	17	29881	6MJ X 4MP FITTING	1
	18	45326	FITTING, #12 BSPP X ##12 JIC STRAIGHT	1
	19	29773	ADAPTER, #12 JIC X 3/4 FPT 90°	1
	20	N/A	SITE GAUGE – 45320, (Original Compressor Part)	
	21	45361	AIR CLEANER COVER	1
	22	45323	AIR FILTER ELEMENT	1
	N/A	45349	SWITCH, TEMP 110C, COMPRESSOR	1

©2026 by Crafco All Rights Reserved

9.14 Hydraulic Compressor Valve Assembly: PN 45425

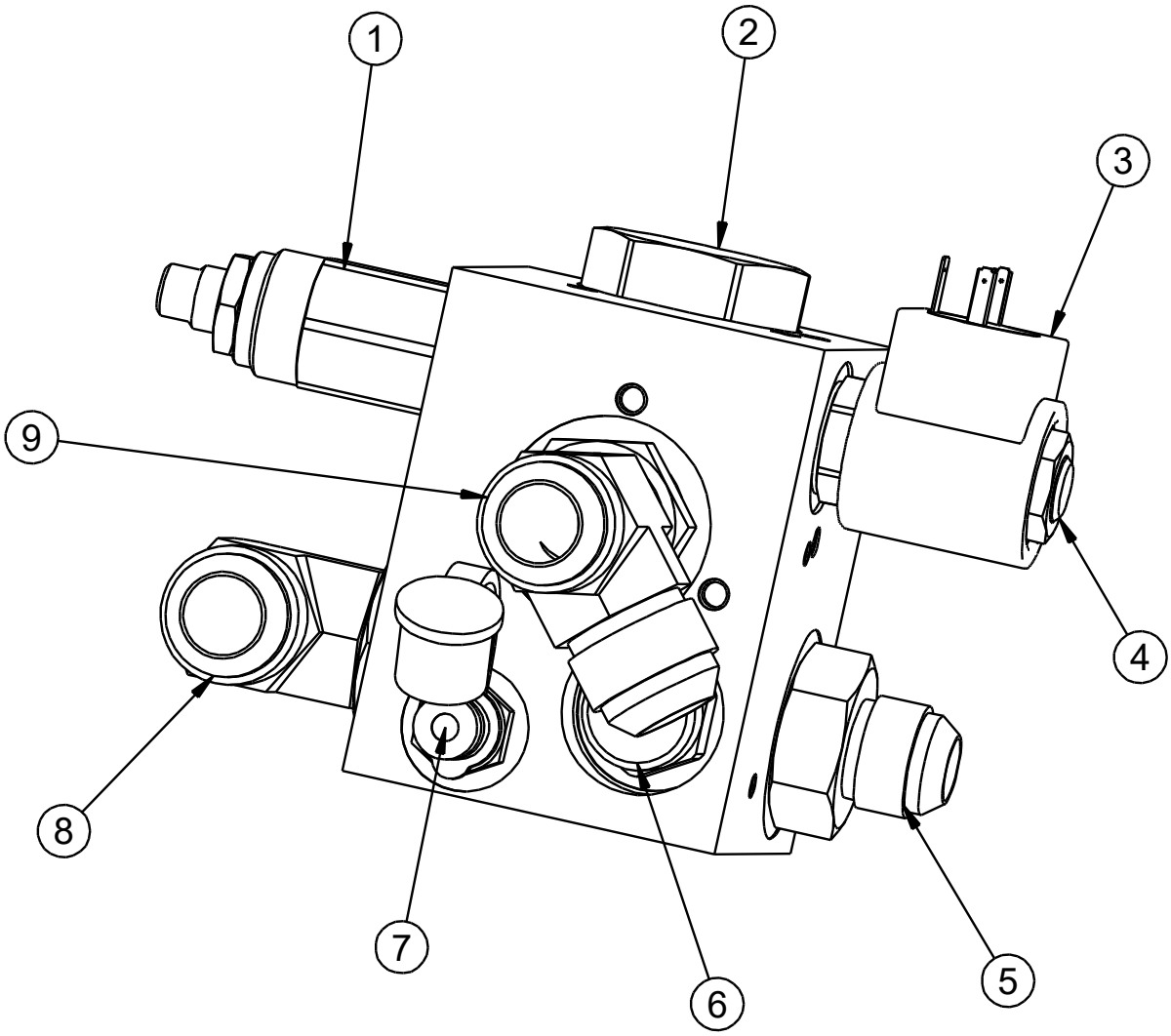

Fig. 9-19 Hydraulic Compressor Valve Assembly: PN 45425

Table 9-19 Hydraulic Compressor Valve Assembly: PN 45425

FIG.	ITEM	PART NO.	DESCRIPTION	QTY.
Fig. 9-19	1	45591	VALVE, RELIEF	1
	2	45429	VALVE, LOGIC RELIEF	1
	3	45426	COIL, SOLENOID VALVE	1
	4	45424	VALVE, SOLENOID	1
	5	-	FITTING, #12 ORB X #10 JIC STRAIGHT	2
	6	45436	FLOW CONTROL, PRESSURE COMP.	1
	7	45414	FITTING, TEST POINT	1
	8	45413	CAP, DUST	1
	9	-	TEE, #12 ORB X #12 JIC RUN	1

©2026 by Crafco All Rights Reserved

9.15 High Output Air Lance PN: 47483N (standard)

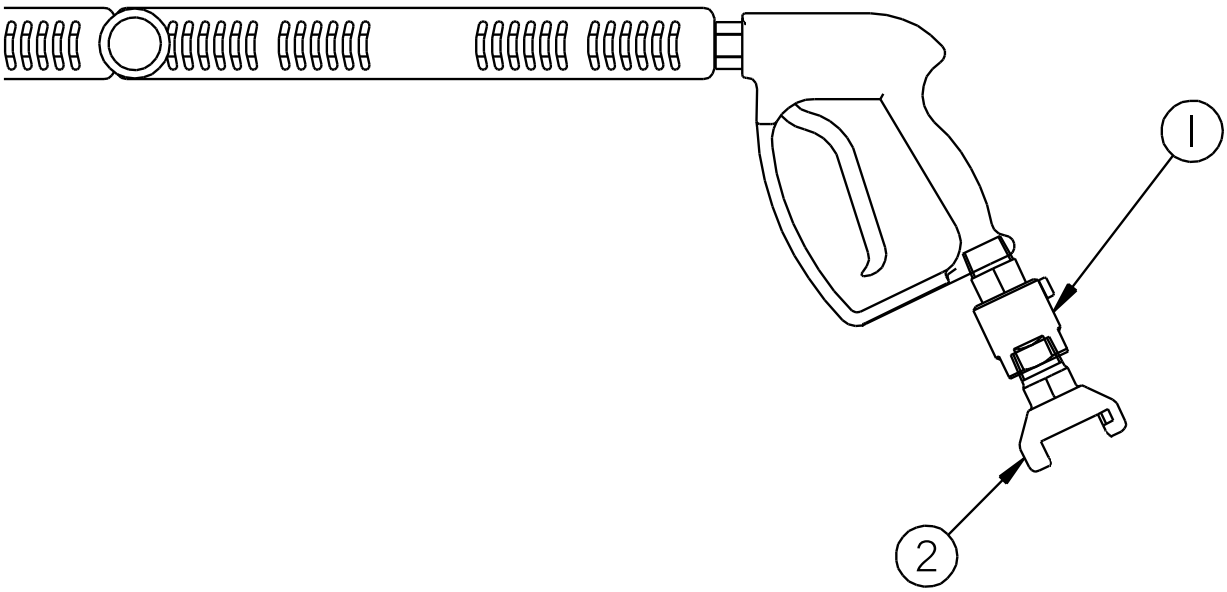

Fig. 9-20 High Output Air Lance PN: 47483N (standard)

Table 9-20 High Output Air Lance PN: 47483N (standard)

FIG.	ITEM	PART NO.	DESCRIPTION	QTY.
Fig. 9-20	1	70250	3/4” SWIVEL	1
	2	47488N	FITTING, 3/4” AIR HOSE	1

©2026 by Crafco All Rights Reserved

9.16 High Output Air Lance with Water Separator PN: 47491N (optional)

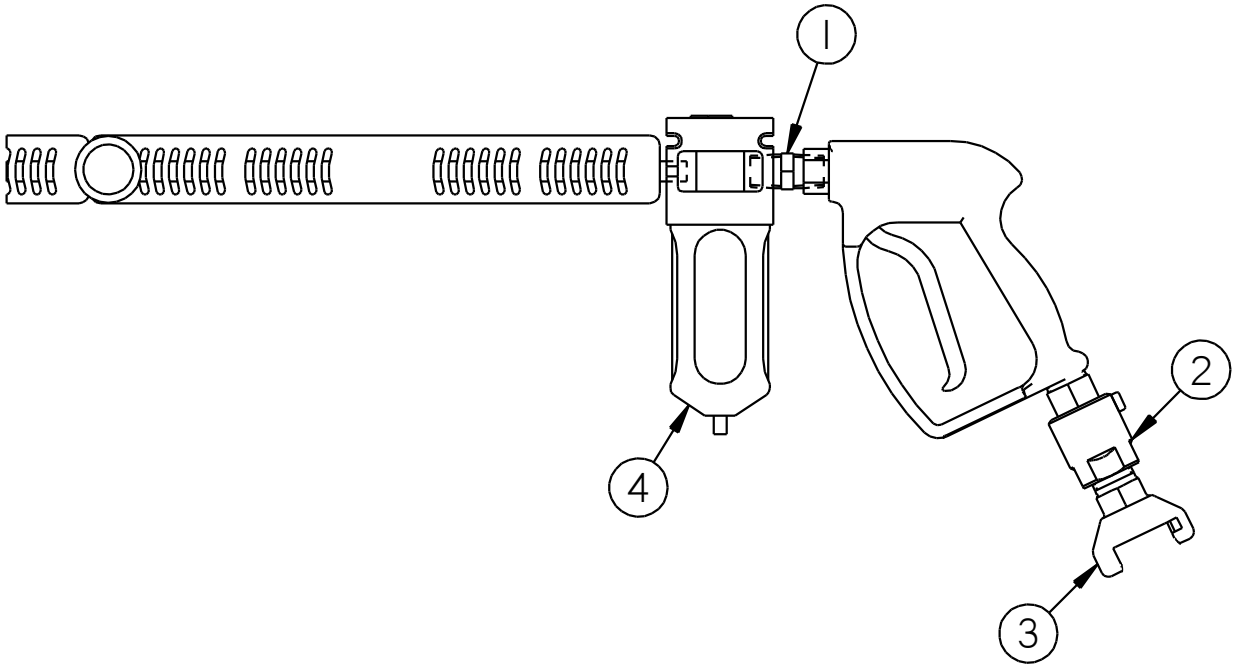

Fig. 9-21 High Output Air Lance with Water Separator PN: 47491N (optional)

Table 9-21 High Output Air Lance with Water Separator PN: 47491N (optional)

FIG.	ITEM	PART NO.	DESCRIPTION	QTY.
Fig. 9-21	1	51405	1/2 X 1/2 NPT HEX NIPPLE	1
	2	70250	3/4” SWIVEL	1
	3	47488N	FITTING, 3/4” AIR HOSE	1
	4	47490N	FILTER, WATER SEPARATOR	1
	N/A	47491S	WATER SEPARATOR SALES KIT FOR HI OUTPUT AIR LANCE	1

©2026 by Crafco All Rights Reserved

9.17 Wand Assembly PN 52200

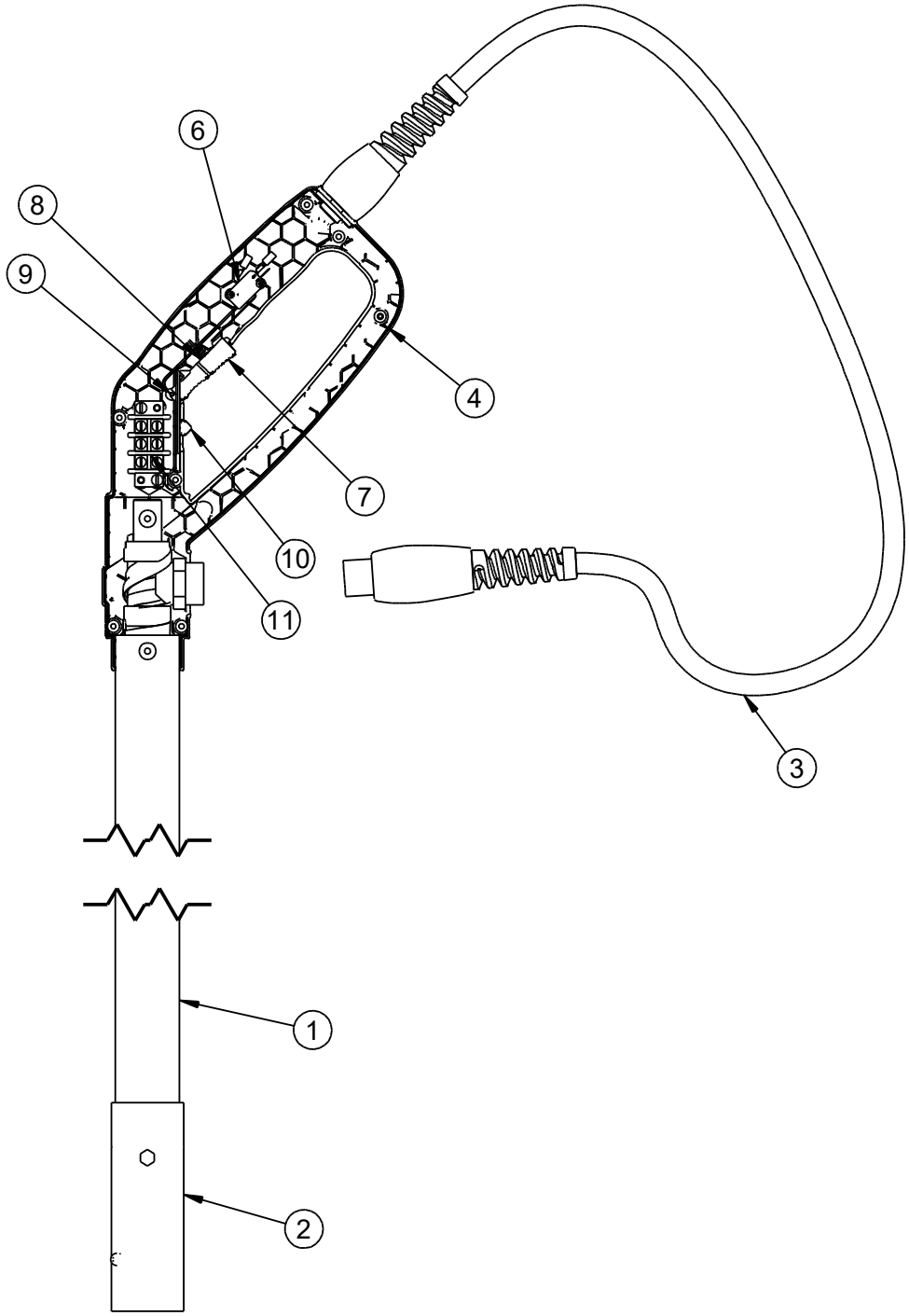

Fig. 9-22 Wand Assembly PN 52200

Table 9-22 Wand Assembly PN 52200

FIG.	ITEM	PART NO.	DESCRIPTION	QTY.
Fig. 9-22	1	52204	COVER, WAND	1
	2	50278	TIP GUARD, LONG CLAMP ON	1
	3	52206	CORD ASSEMBLY	1
	4	52201RN	HANDLE, WAND – RIGHT (W/INSERTS)	1
	5	52201LN	HANDLE, WAND – LEFT (NOT SHOWN)	1
	6	52208	SWITCH, WAND	1
	7	52202N	ACTUATOR	1
	8	52207	SPRING, ACTUATOR	1
	9	52209	PIN, ACTUATOR	1
	10	52203N	LOCK, TRIGGER	1
	11	51656	TERMINAL STRIP	1

©2026 by Crafco All Rights Reserved

9.18 Super Shot Flex Boom

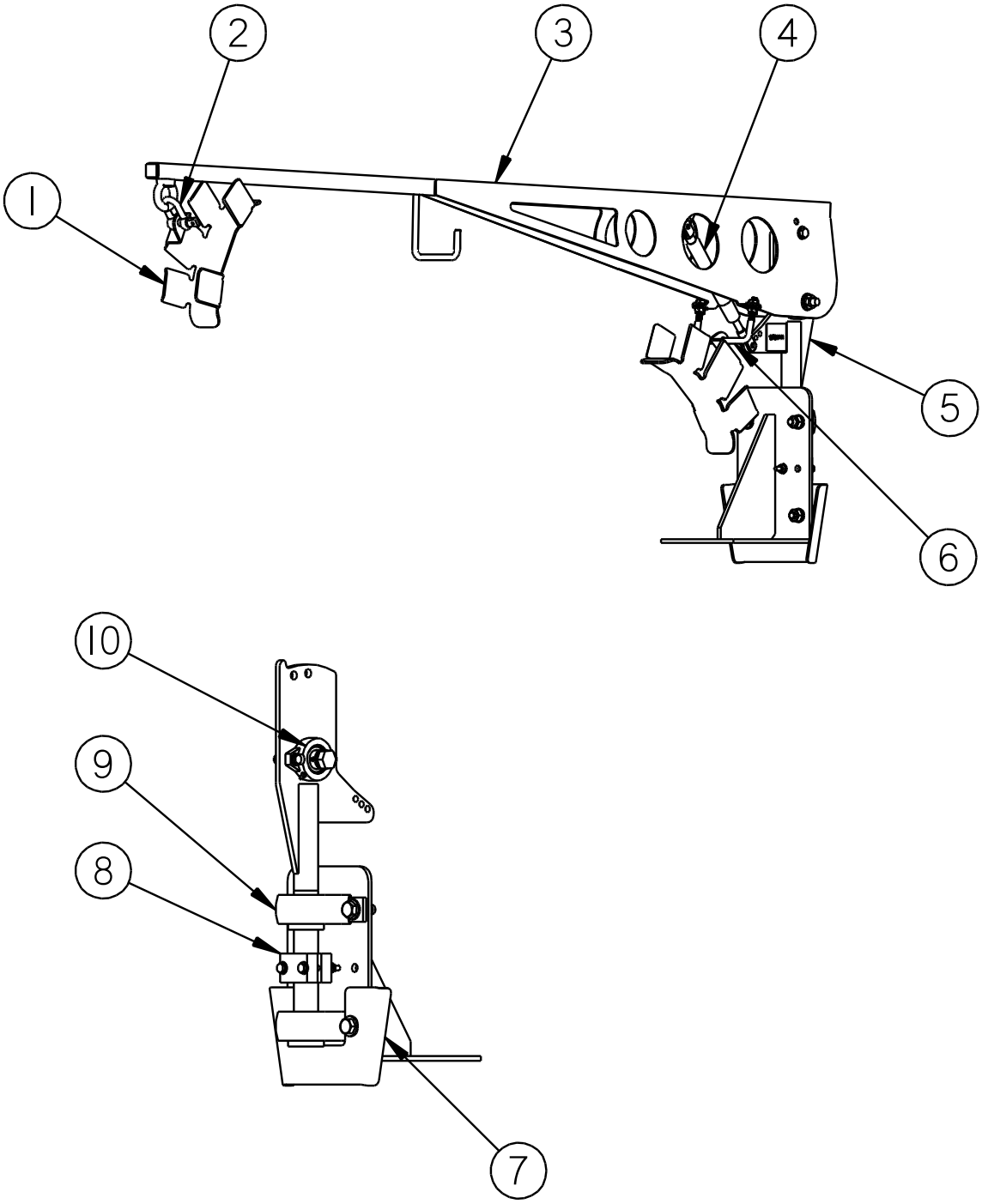

Fig. 9-23 Super Shot Flex Boom

Table 9-23 Super Shot Flex Boom

FIG.	ITEM	PART NO.	DESCRIPTION	QTY.
Fig. 9-23	1	52532N	HOSE HANGER	2
	2	20144	3/8" CHAIN SHACKLE W/SCREW PIN	1
	3	52510N	BOOM ARM ASSY, SS FLEX BOOM	1
	4	52531S	BOOM STRUT - SERVICE PART	1
	5	52520N	BOOM MAST ASSY, SS FLEX BOOM	2
	6	52533N	BOOM U-BOLT	1
	7	52534N	HOSE GUARD, SS FLEX BOOM	1
	8	46333	PAD, BRAKE-BOOM BRAKE	2
	9	45553	BEARING, PILLOW BLOCK	2
	10	52530N	BOOM BEARING	2

©2026 by Crafco All Rights Reserved

9.19 Engine Cover Assembly PN: 48120N (optional)

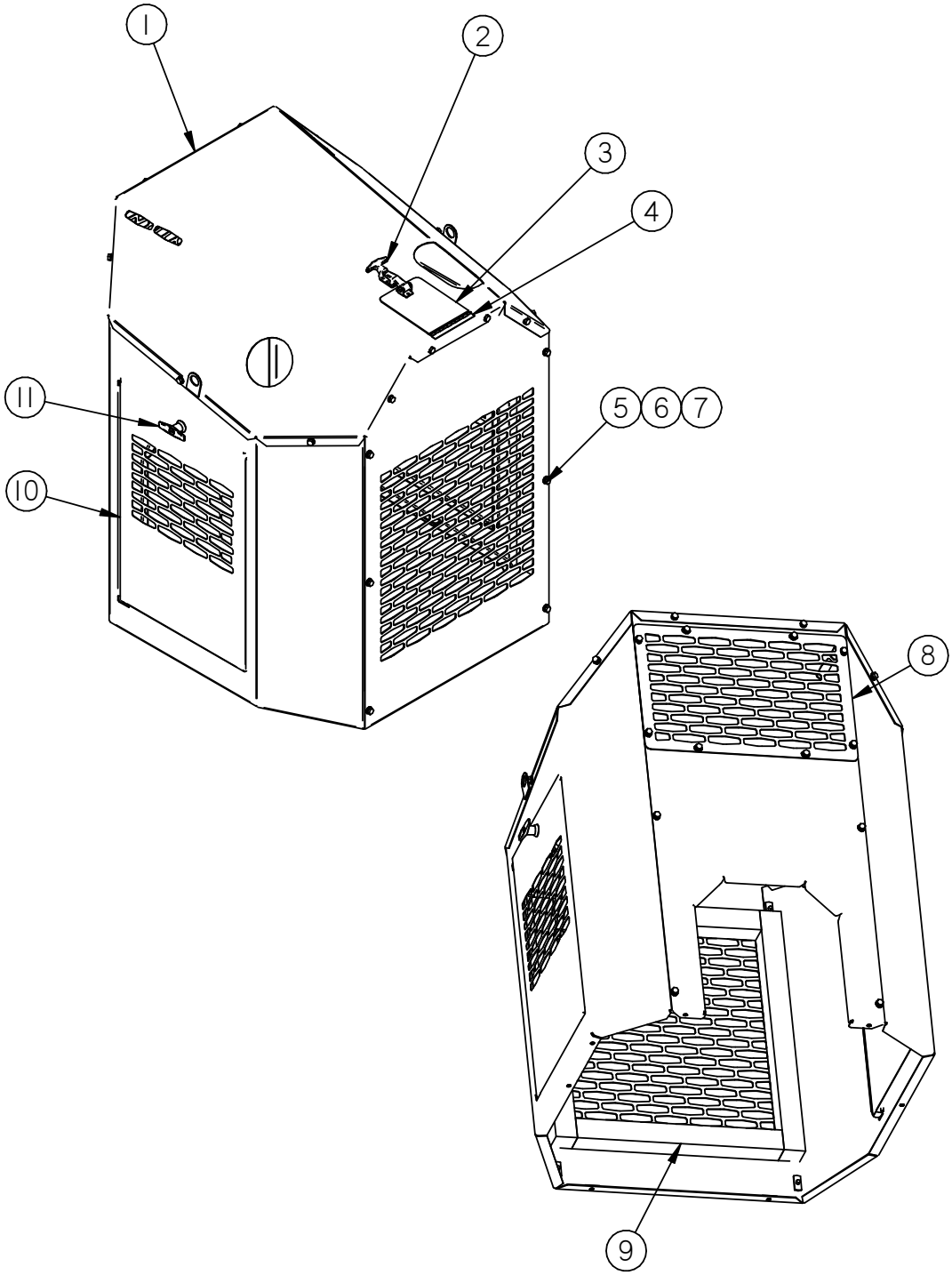

Fig. 9-24 Engine Cover Assembly PN: 48120N (optional)

Table 9-24 Engine Cover Assembly PN: 48120N (optional)

FIG.	ITEM	PART NO.	DESCRIPTION	QTY.
Fig. 9-24	1	48120N	OPTIONAL ENGINE COVER COMPLETE	1
	2	45597	RUBBER T-HANDLE DRAW LATCH	1
	3	48127N	HINGE DOOR YANMAR	1
	4	48128N	RADIATOR FILL DOOR	1
	5	28671	5/16" S.A.E. FLAT STEEL WASHER	24
	6	28646	5/16" LOCK WASHER	24
	7	28715	5/16-18 X 3/4 HX HEAD BOLT	24
	8	48210S	PANEL REAR, PAINTED YANMAR, REPLACEMENT	1
	9	48130N	ENGINE COVER RADIATOR SEAL KIT YANMAR	1
	10	48126P	ACCESS DOOR ASSY, SALES YANMAR	2
	11	47510N	LATCH, COMPRESSION, KEY LOCKABLE	2
	12	47511N	WEATHER STRIPPING, FLAT	2.6 FT
	13	48139N	OPT. ENG. COVER INSULATION KIT (NOT SHOWN)	1
	NS	48211S	PANEL, REAR W/ACCESS, PAINTED KIT	1

©2026 by Crafco All Rights Reserved

9.20 Hot Air Lance (optional)

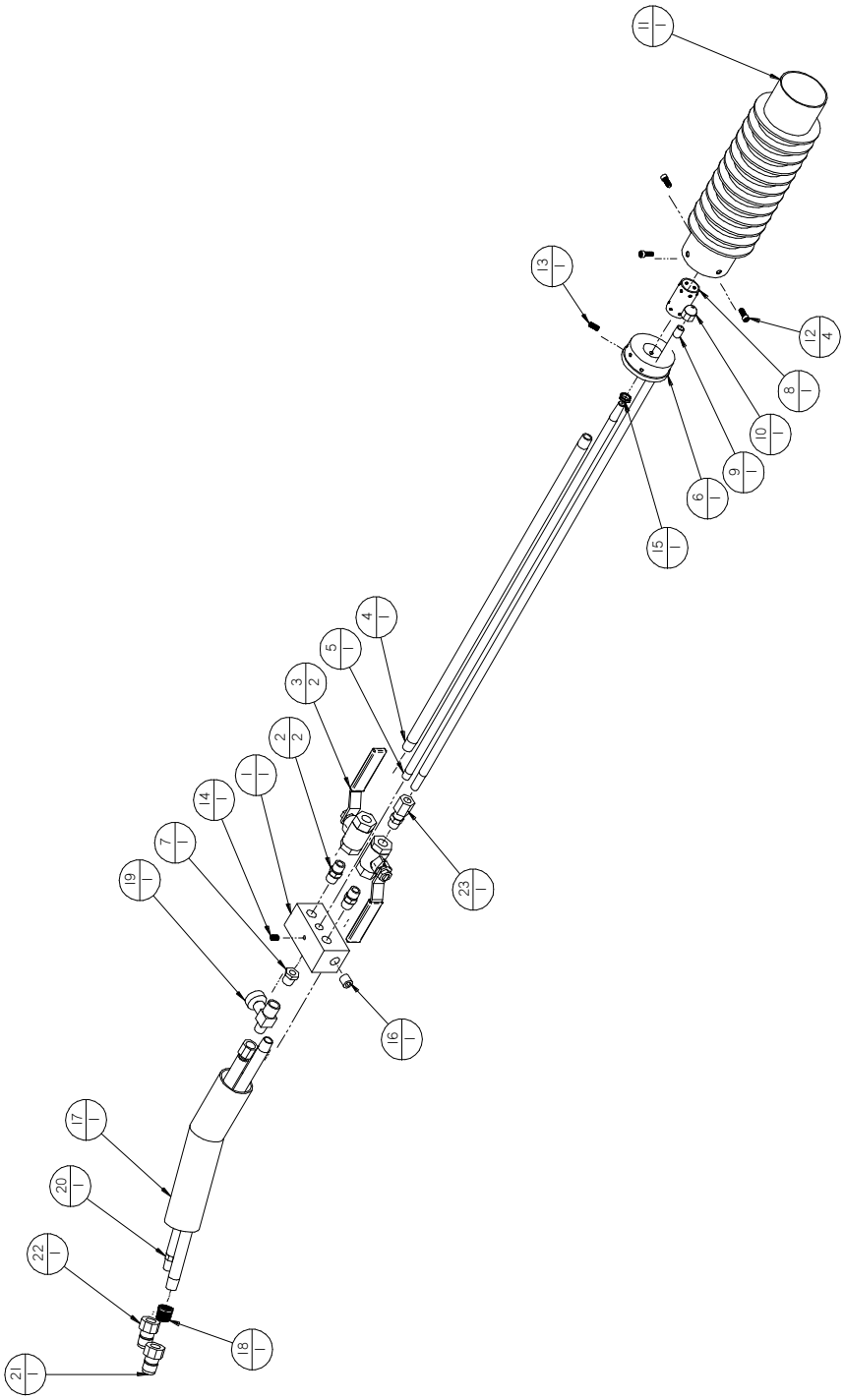

Fig. 9-25 Hot Air Lance (optional)

Table 9-25 Hot Air Lance (optional)

FIG.	ITEM	PART NO.	DESCRIPTION	QTY.
Fig. 9-25	1	45651	MIXING BLOCK	1
	2	51401	NIPPLE, 1/4 NPT HEX	2
	3	29195	VALVE, 1/4” BALL	2
	4	45656	AIR MIXER TUBE	1
	5	45658	PROPANE TUBE W/ ORIFICE	1
	6	45652	BURNER BASE	1
	7	28340	BUSHING, 1/4” NPT X 1/8” NPT	1
	8	45654	PRIMARY BURNER TUBE	1
	9	45657	AIR LANCE TUBE	1
	10	45668	AIR ORIFICE “A” - .125”	1
	11	45653	MAIN BURNER TUBE	1
	12	45670	SCREW, #10-32 X 1/2” ALLEN SCREW	4
	13	45672	SCREW, #10-32 X 1/2” ALLEN SET	1
	14	45671	SCREW, 1/4-20 X 3/8” ALLEN SET	1
	15	45669	NUT, 1/8-27 JAM	1
	16	27990	PLUG, 1/4” COUNTERSUNK	1
	17	45655	HANDLE ASSEMBLY	1
	18	45663	BUSHING, 3/8” NPT X 1/4” NPT REDUCER	1
	19	45659	VALVE, NEEDLE	1
	20	45675	HOSE ASSEMBLY, PROPANE	1
	21	45679	COUPLING, 1/4” FPT X M	1
	22	45681	COUPLING, 1/4” NPT X FM	1
	23	45664	FITTING, 1/4” NPT X 3/8 JIC FERRULE LOCK	1

©2026 by Crafco All Rights Reserved

Chapter 10 Tools and Accessories

10.0 Tools and Accessories

Crafco Applicator Disk
27162 – 3” Disk Assembly
27163 – 4” Disk Assembly
27164 – 6” Disk Assembly

Crafco Swivel Disk Applicator
27120 – 3” Swivel Applicator
27130 – 4” Swivel Applicator

Crafco Sealing Foot/Flush
27154 – 1/4” Flush
27155 – 3/8” Flush

Crafco Sealing Foot/Protruded
27159 – 1/4” Protruding
27160 – 3/8” Protruding

Crafco Joint Sealing Tip
27146 – 1/4” Sealing Tip
27147 – 3/8” Sealing Tip

Crafco Round Sealing Tip
27170 – 3/8” Sealing Tip
27171 – 1/2” Sealing Tip

Crafco Cold Air Lance - 42648

©2026 by Crafco All Rights Reserved

Chapter 10 Tools and Accessories

Crafco Heavy Duty Squeegee with Aluminum Handle - 27199
27195 – Replacement Blade

Super Shot Drip Stopper
Use with 50270 Duckbill
27114 – Tip Adapter
27115 – Shroud, Tip Adapter

Crafco Duckbill - 50270

Crafco Pour Pot with Wheels - 40200

Crafco Handheld Pour Pot - 40201

Crafco High Velocity Heat Lance - 45650

©2026 by Crafco All Rights Reserved

Chapter 10 Tools and Accessories

Crafco Hand Torch
W/ 20ft. Hose – 25012
W/ 12ft. Hose – 25016
W/ 50ft. Hose - 25021

©2026 by Crafco All Rights Reserved

©2026 Crafco