# SUPER SHOT 125 DIESEL MELTER

Parts Manual - 26633N
Revision M

Fill in appropriate fields that apply to this machine

Machine S/N: _____

Hose S/N: _____

Wand S/N: _____

Pump S/N: _____

Engine S/N: _____

## Revisions

| Revision | Date |
|---|---|
| D) Fuel tank changed to a FMCSA compliant tank, updated tables, and figures (9-7, 9-8, 9-9, 9-23 and 9-24) for only 43600DX. Added 47247N and 47277N shoebox covers to the parts list for all units | 5/10/2021 |
| E) Corrected a typo on the material pump troubleshooting Table 8-23 (2a) and corrected part number for engine extension harness Table 9-11. Switched to the SS Flex Boom, added parts breakdown. | 10/5/2021 |
| F) Fix typos on the Machine Specifications. Added burner fuel filter change in Table 6-1. Added flex boom features to the maintenance chapter. | 1/3/2022 |
| G) Added engine radiator maintenance on table 6-1. Added Deutz engine info to Table 4-1, Revised Section 5.3, Section 9.7, Table 6-4, Table 6-6, Table 9-2, Table 9-5, Table 9-8, Table 9-26, Table 9-27, Added section 9.8. | 9/16/2022 |
| H) Added alternator part number to Table 9-12. | 9/2023 |
| J) Updated Safety Information Chapter 2.0 and Section 5.12. Updated part numbers for both the hydraulic and diesel tanks in Table 9-1, 9-4 & 9-7. | 2/2024 |
| K) Added Engine Event History 8.5 and 8.5.1 | 11/15/24 |
| L) Updated Deutz fuel filter, Table 6.4 and Engine parts list 9.8 & Table 9.13 | 4/2025 |
| M) Logo change, warranty update, removed Deutz engine information copy right update, removed 32259 heat lance, added 47970N washer and engine cover door. | 10/2026 |

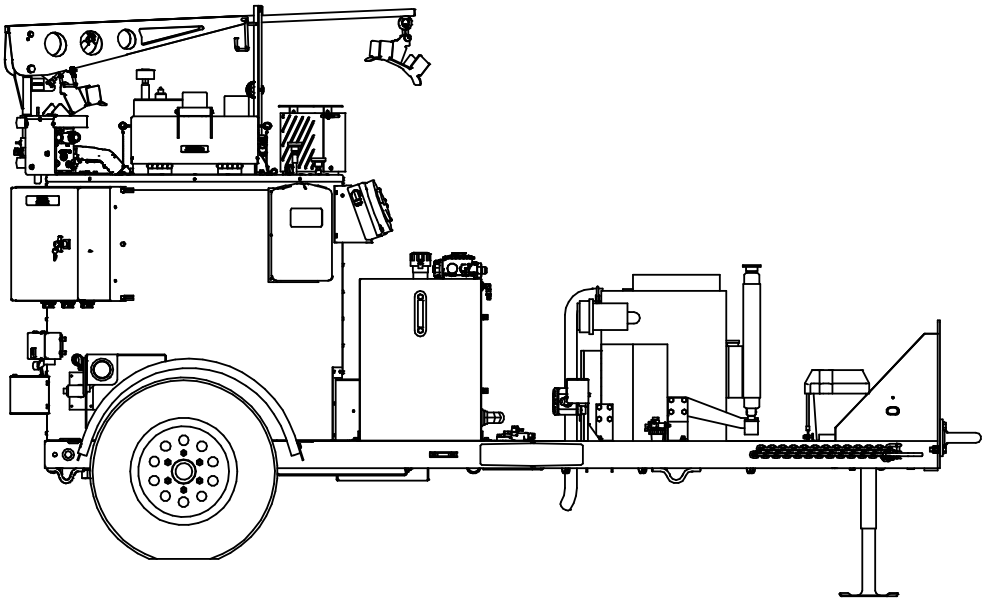

**Super Shot 125 Diesel Melter**
**PN 43600**

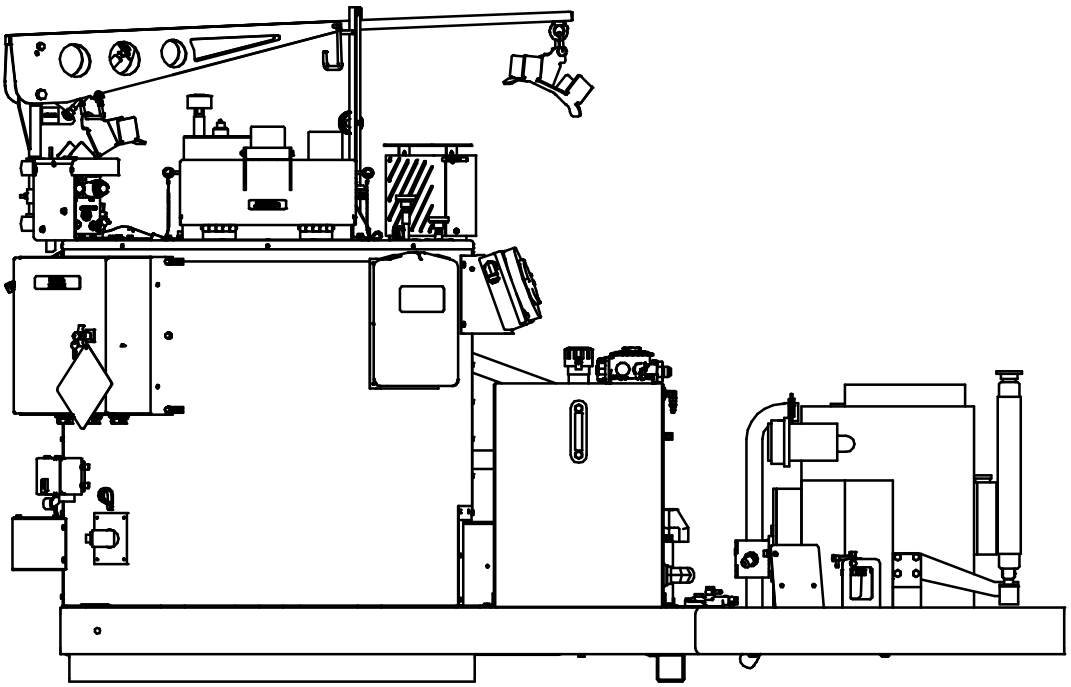

**Super Shot 125 Skid Diesel Melter**
**PN 57200**

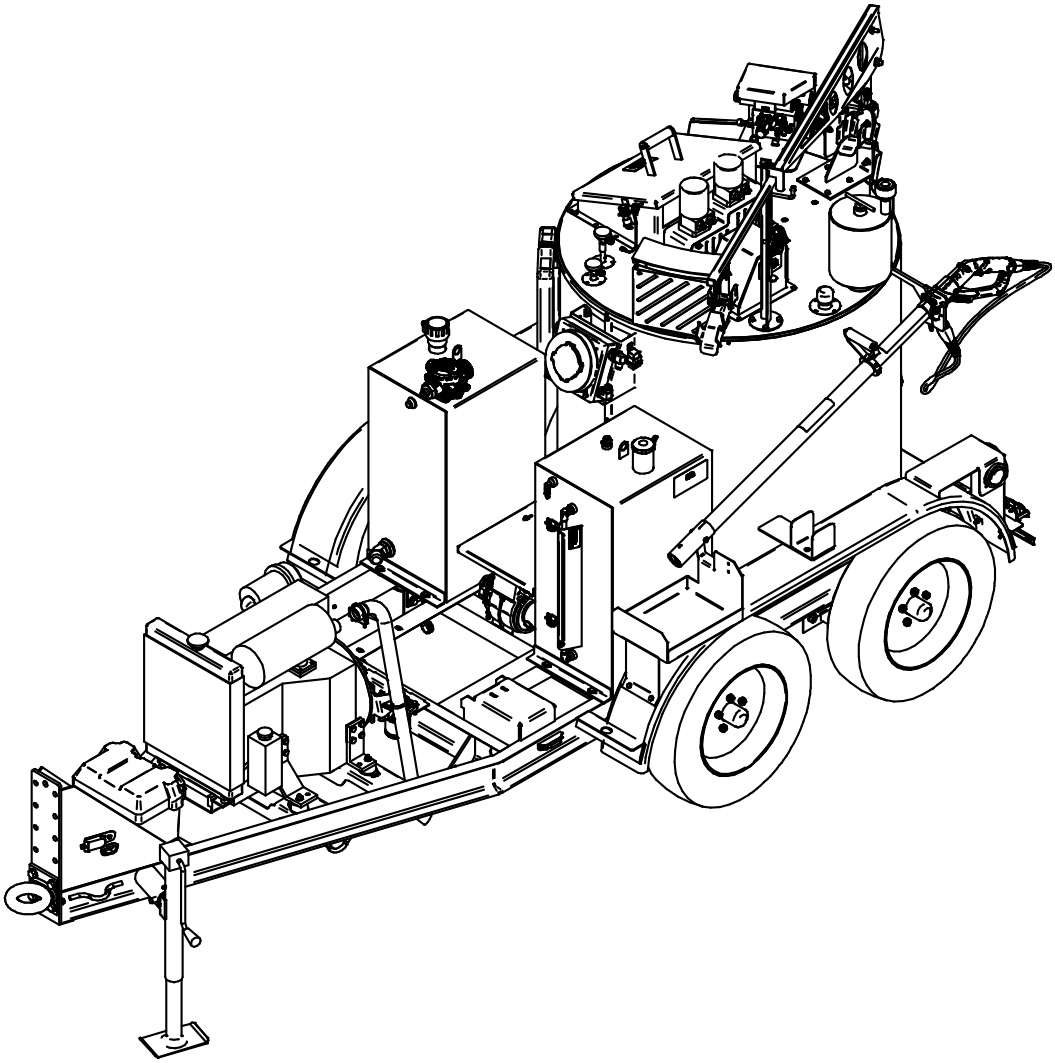

**Super Shot 125 Dual Axle Diesel Melter**
**PN 43600DX**

# Table of Contents


1.0 About This Manual ..... 1-1
1.1 How to use this manual ..... 1-1
2.0 Safety Precautions ..... 2-1
2.1 General Safety ..... 2-1
2.2 Personal Safety ..... 2-1
2.3 Equipment or Operational Safety ..... 2-1
2.4 California Proposition 65 ..... 2-2
2.4.1 All Crafco Equipment ..... 2-2
2.4.2 All Crafco Equipment using a diesel engine ..... 2-2
2.5 Towing or Driving for Transporting with Burner On ..... 2-3
2.6 Safety Symbols and Notices ..... 2-4
3.0 Limited Warranty ..... 3-1
3.1 Warranty Claim Instructions ..... 3-2
4.0 Machine Specifications ..... 4-1
5.0 Operating Instructions ..... 5-1
5.1 Preparing the Machine for Start Up ..... 5-1
5.2 Machine Start Up for All Models ..... 5-3
5.3 Altitude Compensation System ..... 5-4
5.4 About the Heated Hose, Wand, Valve, and Tip Guard ..... 5-5
5.5 Operating the Electric Hose ..... 5-6
5.6 Dispensing the Material ..... 5-7
5.7 About the Active Screen Pump Protection ..... 5-7
5.8 Loading Material into the Sealant Tank ..... 5-8
5.8.1 Material Tank Depth Chart ..... 5-9
5.9 Shutting Down and Cleaning Out the Machine, All Models ..... 5-10
5.10 Storing the Electric Hose for Transport ..... 5-11
5.11 Overnight Heater Use ..... 5-12
5.12 Mounting a Skid Machine ..... 5-13
5.13 Shot Timer Option ..... 5-15
5.13.1 Shot Timer Troubleshooting Manual ..... 5-16
5.14 Storing the Machine ..... 5-16
6.0 Maintenance Instructions ..... 6-1
6.1 Engine ..... 6-1
6.2 Hydraulic System ..... 6-1

## Table of Contents


6.3 Heat Transfer Oil ..... 6-1
6.4 Wheel Bearing ..... 6-1
6.5 Material Sensor Tube ..... 6-1
6.6 Cleaning Material Tank and Sensor Area ..... 6-2
6.7 Lug Nuts ..... 6-2
6.8 Brakes ..... 6-2
6.9 Tongue Jack ..... 6-2
6.10 Temperature Control Calibration ..... 6-3
6.11 Cleaning the Melter ..... 6-3
6.12 Maintenance Chart ..... 6-4
6.13 Service Instructions ..... 6-5
6.14 General Maintenance Parts ..... 6-5
6.15 Recommended Spare Parts ..... 6-6
6.16 Recommended Fluids and Lubricants ..... 6-7
6.17 Applicable Brands of Heat Transfer Oil ..... 6-8
6.18 Typical Heat Transfer Oil Specifications ..... 6-8
6.19 Changing the Heat Transfer Oil ..... 6-9
6.20 Material Pump Replacement ..... 6-10
6.21 Flex Boom Adjustment ..... 6-23
6.21.1 Strut Adjustment ..... 6-23
6.21.2 Locked Position of the Flex Boom ..... 6-23
6.21.3 Grease Zerk ..... 6-24
6.21.4 Boom Swing Adjustment Nut ..... 6-24
6.22 Wand Repair Instructions ..... 6-25
6.22.1 Cable Replacement ..... 6-25
6.22.2 Switch Replacement ..... 6-25
6.22.3 Terminal Block Replacement ..... 6-25
6.22.4 Wand Handle Replacement ..... 6-26
6.23 Burner Fuel Filter Replacement ..... 6-29
7.0 How to Use a Multimeter ..... 7-1
7.1 Checking DC Voltage with a Multimeter ..... 7-1
7.2 Checking AC Voltage with Multimeter ..... 7-1
7.3 Checking Resistance (Ohms) ..... 7-1
7.3.1 How to Check Wire Continuity ..... 7-1
7.3.2 How to Check RTD Sensor ..... 7-1

# Table of Contents


7.4 Checking Amperage ..... 7-2
8.0 Troubleshooting, All Models ..... 8-1
8.1 Diesel Burner Troubleshooting ..... 8-1
8.1.1 Symptoms: Burner will Not Ignite ..... 8-1
8.1.2 Burner Electrical Troubleshooting ..... 8-2
8.1.3 Excessive Smoke Coming Out of Exhaust Stack ..... 8-6
8.1.4 Burner Lights but Shuts Down After 15 Seconds ..... 8-6
8.1.5 Testing DC Controller ..... 8-7
8.1.6 Burner Fuel Solenoid Testing ..... 8-7
8.1.7 Burner Ignition Coil Testing ..... 8-8
8.1.8 Bleeding the Burner ..... 8-8
8.1.9 Sealant is Heating Slowly ..... 8-10
8.2 Mixer Troubleshooting ..... 8-11
8.2.1 Symptom: Mixer Does Not Rotate ..... 8-11
8.2.2 Mixer Electrical Troubleshooting ..... 8-12
8.2.3 Mixer Hydraulic Troubleshooting ..... 8-16
8.3 Hose Troubleshooting ..... 8-19
8.3.1 Symptom: Hose Does Not Heat ..... 8-19
8.3.2 Hose Electrical Troubleshooting ..... 8-19
8.3.3 Symptom: Trigger is not Working ..... 8-24
8.3.4 RTD Sensor Ohms vs. Temperature ..... 8-25
8.4 Pump Troubleshooting ..... 8-27
8.4.1 Symptom: Material Does Not Dispense When the Pump is Activated ..... 8-27
8.4.2 Pump Electrical Troubleshooting ..... 8-28
8.4.3 Pump Hydraulic Troubleshooting ..... 8-34
8.5 Engine Event History Log ..... 8-35
8.5.1 How to Access Engine “Event History” in Digital Engine Controller for Non-ECU (Electronic Control Unit) Controlled Melters ..... 8-35
9.0 About the Illustrated Parts List ..... 9-1
9.1 Ordering Crafco Parts ..... 9-1
9.2 Super Shot 125 Diesel Melter Assembly 43600 ..... 9-2
9.3 Super Shot 125 Diesel Melter Skid Mount Assembly 57200 ..... 9-8
9.4 Super Shot 125 Diesel Melter Dual Axle PN 43600DX ..... 9-14
9.5 Tank Assembly, All Models ..... 9-20
9.6 Control Box Assembly: PN 47250N All Models ..... 9-22

## Table of Contents

9.7 Engine Assembly: PN 47125N Isuzu Diesel ..... 9-24
9.8 Hydraulic Control Valve Assembly: PN 45420 All Models ..... 9-26
9.9 Material Flow Control Assembly: PN 46060 All Models ..... 9-28
9.10 Pump/Mixer Motor Assembly: PN 44832 All Models ..... 9-30
9.11 Diesel Burner Assembly: PN 46380 All Models ..... 9-32
9.12 Hydraulic Diagram: PN 26554 (43600 & 57200) ..... 9-34
9.13 Hydraulic Diagram: PN 26554DX (43600DX) ..... 9-38
9.14 Diesel Fuel Line Schematic (43600 & 57200) ..... 9-42
9.15 Diesel Fuel Line Schematic – (43600DX) ..... 9-46
9.16 Electrical Schematic: (43600 & 57200) ..... 9-50
9.17 Electrical Schematic: (43600DX) ..... 9-52
9.18 Wand Assembly: PN 52200 All Models ..... 9-54
9.19 Super Shot Flex Boom ..... 9-56
9.20 Optional Engine Cover for 3CH1 Engine All Models ..... 9-58
10.0 Tools and Accessories ..... 10-1

# List of Figures

Fig. 5-1 Hydraulic Fluid Level and Temp. Gauge ..... 5-2
Fig. 5-2 Heat Transfer Oil Dip Stick ..... 5-2
Fig. 6-1 Lug bolt Tightening Sequence ..... 6-2
Fig. 6-2 Temperature Control Calibration ..... 6-3
Fig. 6-3 Heat Transfer Oil Drain and Fill Ports ..... 6-9
Fig. 6-4 Agitator and Pump Shaft Alignment ..... 6-10
Fig. 6-5 Removal of Motor Mount Assembly ..... 6-11
Fig. 6-6 Supporting the Agitator Away from the Material Pump ..... 6-12
Fig. 6-7 Unbolting the Material Pump ..... 6-13
Fig. 6-8 Cleaning of the Pump Mounting Plate ..... 6-14
Fig. 6-9 Pump Drive Shaft Dry Fit to Material Pump ..... 6-15
Fig. 6-10 New Material Pump Mounting ..... 6-16
Fig. 6-11 Agitator Shaft and Paddles Mounting ..... 6-17
Fig. 6-12 Alignment Washer ..... 6-18
Fig. 6-13 Pump Shaft Placement ..... 6-19
Fig. 6-14 Pump Shaft to Hydraulic Pump Motor Placement ..... 6-20
Fig. 6-15 Agitator Connecting Link ..... 6-21
Fig. 6-16 Agitator Chain Tightening Steps ..... 6-22
Fig. 6-17 Flex Boom Adjustment ..... 6-23
Fig. 6-18 Switch Wire Location ..... 6-26
Fig.6-19 Wire Routing ..... 6-26
Fig.6-20 Terminal Block Wiring ..... 6-27
Fig.6-21 Actuator Spring Location ..... 6-27
Fig.6-22 Actuator / Trigger Assembly ..... 6-28
Fig. 7-1 Standard Multimeter ..... 7-2
Fig. 7-2 Clamp – On Amp Meter/Multimeter ..... 7-3
Fig. 8-1 Diesel Burner Schematic ..... 8-5
Fig. 8-2 Diesel Burner Electrode Adjustment ..... 8-9
Fig. 8-3 Diesel Burner Air Settings ..... 8-9
Fig. 8-4 Checking Din Plug Voltage ..... 8-14
Fig. 8-5 Mixer Schematic ..... 8-15

# List of Figures

Fig. 8-6 Hydraulic Valve Pressure Setting ..... 8-17
Fig. 8-7 Din Plug Layout ..... 8-18
Fig. 8-8 Junction Box Voltage Testing ..... 8-21
Fig. 8-9 Hose Circuit Schematic ..... 8-22
Fig. 8-10 Junction Box Wiring ..... 8-23
Fig. 8-11 Pump Schematic ..... 8-33
Fig. 9-1 Super Shot 125 Diesel Melter: PN 43600 ..... 9-2
Fig. 9-2 Super Shot 125 Diesel Melter: PN 43600 (continued) ..... 9-4
Fig. 9-3 Super Shot 125 Diesel Melter: PN 43600 (continued) ..... 9-6
Fig. 9-4 Super Shot 125 Diesel Melter Skid Mount Assembly 57200 ..... 9-8
Fig. 9-5 Super Shot 125 Diesel Melter Skid Mount Assembly 57200 (continued) ..... 9-10
Fig. 9-6 Super Shot 125 Diesel Melter Skid Mount Assembly 57200 (continued) ..... 9-12
Fig. 9-7 Super Shot 125 Diesel Melter Dual Axle PN 43600DX ..... 9-14
Fig. 9-8 Super Shot 125 Diesel Melter Dual Axle PN 43600DX (continued) ..... 9-16
Fig. 9-9 Super Shot 125 Diesel Melter Dual Axle PN 43600DX (continued) ..... 9-18
Fig. 9-10 Tank Assembly: All Models ..... 9-20
Fig. 9-11 Control Box Assembly: PN 47250N All Models ..... 9-22
Fig. 9-12 Engine Assembly: PN 47125N Isuzu Diesel ..... 9-24
Fig. 9-13 Hydraulic Control Valve Assembly: PN 45420 All Models ..... 9-26
Fig. 9-14 Material Flow Control Assembly: PN 46060 All Models ..... 9-28
Fig. 9-15 Pump/Mixer Motor Assembly: PN 44832 All Models ..... 9-30
Fig. 9-16 Diesel Burner Assembly: PN 46380 All Models ..... 9-32
Fig. 9-17 Hydraulic Diagram: PN 26554 (43600 & 57200) ..... 9-34
Fig. 9-18 Hydraulic Diagram: PN 26554 (43600 & 57200 continued) ..... 9-36
Fig. 9-19 Hydraulic Diagram: PN 26554DX (43600DX) ..... 9-38
Fig. 9-20 Hydraulic Diagram: PN 26554DX (43600DX continued) ..... 9-40
Fig. 9-21 Diesel Fuel Line Schematic (43600 & 57200) ..... 9-42
Fig. 9-22 Diesel Fuel Line Schematic (43600 & 57200 continued) ..... 9-44
Fig. 9-23 Diesel Fuel Line Schematic – (43600DX) ..... 9-46
Fig. 9-24 Diesel Fuel Line Schematic – (43600DX continued) ..... 9-48
Fig. 9-25 Electrical Schematic: (43600 & 57200) ..... 9-50

# List of Figures

Fig. 9-26 Electrical Schematic: (43600DX) ..... 9-52
Fig. 9-27 Wand Assembly: PN 52200 All Models ..... 9-54
Fig. 9-28 Super Shot Flex Boom ..... 9-56
Fig. 9-29 Optional Engine Cover for 3CH1 Engine All Models ..... 9-58

# List of Tables

Table 2-1 Safety Symbols and Notices ..... 2-4
Table 2-2 Safety Symbols and Notices (continued) ..... 2-5
Table 4-1 Machine Specifications ..... 4-1
Table 5-1 Preparing the Machine for Start Up ..... 5-1
Table 5-2 Starting the Burner ..... 5-3
Table 5-3 Starting the Burner for Electric Hose (continued) ..... 5-4
Table 5-4 Operating the Electric Hose ..... 5-6
Table 5-5 Dispensing the Material ..... 5-7
Table 5-6 Loading Material into the Sealant Tank ..... 5-8
Table 5-7 Material Tank Depth Chart ..... 5-9
Table 5-8 Shutting Down and Cleaning Out the Machine, All Models ..... 5-10
Table 5-9 Hose for Transport Instructions ..... 5-11
Table 5-10 Overnight Heater Use ..... 5-12
Table 5-11 Mounting a Skid Machine ..... 5-13
Table 5-12 Shot Timer Option ..... 5-15
Table 5-13 Shot Timer Option (continued) ..... 5-16
Table 6-1 Maintenance Chart ..... 6-4
Table 6-2 Service Instructions ..... 6-5
Table 6-3 General Maintenance Parts ..... 6-5
Table 6-4 General Maintenance Parts (continued) ..... 6-6
Table 6-5 Recommended Spare Parts ..... 6-6
Table 6-6 Recommended Fluids and Lubricants ..... 6-7
Table 6-7 Applicable Brand of Heat Transfer Oil ..... 6-8
Table 6-8 Changing the Heat Transfer Oil ..... 6-9
Table 6-9 Material Pump Replacement ..... 6-10
Table 6-10 Material Pump Replacement (continued) ..... 6-11
Table 6-11 Material Pump Replacement (continued) ..... 6-12
Table 6-12 Material Pump Replacement (continued) ..... 6-13
Table 6-13 Material Pump Replacement (continued) ..... 6-14
Table 6-14 Material Pump Replacement (continued) ..... 6-15
Table 6-15 Material Pump Replacement (continued) ..... 6-16

# List of Tables

Table 6-16 Material Pump Replacement (continued) ..... 6-17
Table 6-17 Material Pump Replacement (continued) ..... 6-18
Table 6-18 Material Pump Replacement (continued) ..... 6-19
Table 6-19 Material Pump Replacement (continued) ..... 6-20
Table 6-20 Material Pump Replacement (continued) ..... 6-21
Table 6-21 Material Pump Replacement (continued) ..... 6-22
Table 6-22 Burner Fuel Filter Replacement ..... 6-29
Table 8-1 Basic Visual Troubleshooting ..... 8-1
Table 8-2 Basic Visual Troubleshooting (continued) ..... 8-2
Table 8-3 Burner Electrical Troubleshooting ..... 8-2
Table 8-4 Burner Electrical Troubleshooting (continued) ..... 8-3
Table 8-5 Burner Electrical Troubleshooting (continued) ..... 8-4
Table 8-6 Smoke Coming Out of Exhaust Stack ..... 8-6
Table 8-7 Burner Lights but Shuts Down After 15 Seconds ..... 8-6
Table 8-8 Testing the DC Controller ..... 8-7
Table 8-9 Burner Fuel Solenoid Test ..... 8-7
Table 8-10 Burner Ignition Coil Test ..... 8-8
Table 8-11 Sealant is Heating Slowly ..... 8-10
Table 8-12 Basic Visual Troubleshooting ..... 8-11
Table 8-13 Mixer Electrical Troubleshooting ..... 8-12
Table 8-14 Mixer Electrical Troubleshooting (continued) ..... 8-13
Table 8-15 Mixer Hydraulic Troubleshooting ..... 8-16
Table 8-16 Basic Visual Hose Troubleshooting ..... 8-19
Table 8-17 Hose Electrical Troubleshooting ..... 8-19
Table 8-18 Hose Electrical Troubleshooting (continued) ..... 8-20
Table 8-19 Trigger is Not Working ..... 8-24
Table 8-20 RTD Sensor Ohms vs. Temperature ..... 8-25
Table 8-21 RTD Sensor Ohms vs. Temperature (continued) ..... 8-26
Table 8-22 Basic Visual Pump Troubleshooting ..... 8-27
Table 8-23 Pump Electrical Troubleshooting ..... 8-28
Table 8-24 Pump Electrical Troubleshooting (continued) ..... 8-29

# List of Tables

Table 8-25 Pump Electrical Troubleshooting (continued) ..... 8-30
Table 8-26 Pump Electrical Troubleshooting (continued) ..... 8-31
Table 8-27 Pump Electrical Troubleshooting (continued) ..... 8-32
Table 8-28 Pump Electrical Troubleshooting (continued) ..... 8-33
Table 8-29 Pump Hydraulic Troubleshooting ..... 8-34
Table 9-1 Super Shot 125 Diesel Melter: PN 43600 ..... 9-3
Table 9-2 Super Shot 125 Diesel Melter: PN 43600 (continued) ..... 9-5
Table 9-3 Super Shot 125 Diesel Melter: PN 43600 (continued) ..... 9-7
Table 9-4 Super Shot 125 Diesel Melter Skid Mount Assembly 57200 ..... 9-9
Table 9-5 Super Shot 125 Diesel Melter Skid Mount Assembly 57200 (continued) ..... 9-11
Table 9-6 Super Shot 125 Diesel Melter Skid Mount Assembly 57200 (continued) ..... 9-13
Table 9-7 Super Shot 125 Diesel Melter Dual Axle PN 43600DX ..... 9-15
Table 9-8 Super Shot 125 Diesel Melter Dual Axle PN 43600DX (continued) ..... 9-17
Table 9-9 Super Shot 125 Diesel Melter Dual Axle PN 43600DX (continued) ..... 9-19
Table 9-10 Tank Assembly: All Models ..... 9-21
Table 9-11 Control Box Assembly: PN 47250N All Models ..... 9-23
Table 9-12 Engine Assembly: PN 47125N Isuzu Diesel ..... 9-25
Table 9-13 Hydraulic Control Valve Assembly: PN 45420 All Models ..... 9-27
Table 9-14 Material Flow Control Assembly: PN 46060 All Models ..... 9-29
Table 9-15 Pump/Mixer Motor Assembly: PN 44832 All Models ..... 9-31
Table 9-16 Diesel Burner Assembly: PN 46380 All Models ..... 9-33
Table 9-17 Hydraulic Diagram: PN 26554 (43600 & 57200) ..... 9-35
Table 9-18 Hydraulic Diagram: PN 26554 (43600 & 57200 continued) ..... 9-37
Table 9-19 Hydraulic Diagram: PN 26554DX (43600DX) ..... 9-39
Table 9-20 Hydraulic Diagram: PN 26554DX (43600DX continued) ..... 9-41
Table 9-21 Diesel Fuel Line Schematic (43600 & 57200) ..... 9-43
Table 9-22 Diesel Fuel Line Schematic (43600 & 57200 continued) ..... 9-45
Table 9-23 Diesel Fuel Line Schematic – (43600DX) ..... 9-47
Table 9-24 Diesel Fuel Line Schematic – (43600DX continued) ..... 9-49
Table 9-25 Electrical Schematic: (43600 & 57200) ..... 9-51
Table 9-26 Electrical Schematic: (43600DX) ..... 9-53

# List of Tables

Table 9-27 Wand Assembly: PN 52200 All Models ..... 9-55
Table 9-28 Super Shot Flex Boom ..... 9-57
Table 9-29 Optional Engine Cover for 3CH1 Engine All Models ..... 9-59

# Chapter 1 Introduction

## 1.0 About This Manual

This manual is supplied with each new Crafco Super Shot 125 Diesel Melter. The manual assists your machine operators in the proper use of the melter applicator and provides information about the machine's mechanical functions.

Your Crafco Super Shot 125 Diesel Melter is specially made to give excellent service and save maintenance expense. However, as with all specially engineered equipment, you get best results at minimum cost if you:

Operate your machine as instructed in this manual.

Maintain your machine regularly as stated in this manual.

## 1.1 How to use this manual

This manual is formatted to start each new chapter on the right page. There may be a blank page on the left page if the previous chapter ends on the right page.

If you are viewing this in a digital format (PDF) the following features are available:

1. The Table of Contents, List of Tables, and List of Figures are all hyperlinks; when mouse is left-clicked on section, table, or figure you will be sent to that page.
2. The blue highlighted text throughout the manual is a hyperlink; when mouse is left-clicked you will be sent to that page, table, or figure.
3. The panel to the left in the PDF is a bookmarks panel, if you left-click on any section/heading in the bookmarks panel you will be sent to that page.

©2026 by Crafco All Rights Reserved

# Chapter 2 Safety

## 2.0 Safety Precautions

For more in-depth safety information, please see Safety Manual (PN 26221), which comes with the machine. Or contact your nearest authorized Crafco Distributor at crafco.com/Distributors.

## 2.1 General Safety

- Crafco assumes no liability for an accident or injury incurred through improper use of the machine.
- Read this manual thoroughly before operating the machine.
- Obey all CAUTION and WARNING signs posted on the machine.
- Make sure an operator fully knows how to operate the machine before using the machine.

## 2.2 Personal Safety

- The high operating temperatures of this machine and the sealant it contains requires that protective clothing, gloves, hard-soled shoes, and safety glasses or a face shield be worn at all times by operators of the machine.
- Pay attention to the surfaces you walk and work on, and look out for hazards like uneven ground, spills, other equipment, and debris. Keep your vision clear and the working area clear of obstructions.
- Prevent water from going into any part of the machine. If there is indication of water in the heat transfer oil system, warm heating oil to 250-300°F for 2 to 3 hours.
- Bodily contact with hot sealant or heat transfer oil can cause severe burns.
- If the mixer is not stopped before adding solid material, hot material can get on an operator's body and cause severe burns.
- Keep hands, feet, and clothing away from all moving parts.
- Never attempt to clean out tank with machine on and engine running.
- Never operate the machine without guards in place.
- When maintaining, cleaning or repairing machine, make sure the battery is disconnected to prevent accidental energizing and operation of machine, and have a second person or guarding available to monitor and prevent access to the machine.
- Do not operate the machine when there is a chance of lightning discharge in the atmosphere.

## 2.3 Equipment or Operational Safety

- Do not operate the machine in buildings or work areas that do not have sufficient airflow.
- Shut-down the burner and the engine before refilling the fuel tank.
- Make sure the mixer stops before adding solid material to the sealant tank. Lift the lid, place the material on the lid, and close the lid. The mixer should restart automatically.
- Always keep a correctly maintained fire extinguisher near the machine and know how to use it.
- DO NOT heat transfer oil to a temperature of more than 525°F.
- DO NOT put too much heat transfer oil in the reservoir. The expansion of oil while it heats up can cause overflow. Check the oil each day before starting the burner. With the machine on a level surface, check the heat transfer oil level using the mark on the dipstick closest to the current oil temperature (0°F, 70°F, or 150°F) See Fig. 5-2 Heat Transfer Oil Dip Stick.

©2026 by Crafco All Rights Reserved

Add oil if required. Use only recommended heat transfer oil. Change the oil after 500 hours of machine operation, or one year, whichever comes first.

- Follow the operating instructions for starting and shutting down the burner. Instructions are mounted on the control box on the machine.
- Calibrate the temperature control operation after each 50 hours of machine operation. Refer to section 6.10 Temperature Control Calibration.
- Replace any hoses that show signs of wear, fraying, or splitting.
- Make sure all fittings and joints are tight and do not leak each time the machine is used.
- Make sure battery cover is secure and cables are not damaged before operation.
- Do not leave the machine unattended while the burner is lit.
- Tighten all bolts and screws every 100 hours of machine operation.

## 2.4 California Proposition 65

The state of California currently maintains a list of chemicals that can cause cancer, birth defects, or other reproductive harm. Your Crafco equipment comes with the following warnings:

### 2.4.1 All Crafco Equipment

⚠ **WARNING:** Cancer and Reproductive Harm - www.P65Warnings.ca.gov

26471N

### 2.4.2 All Crafco Equipment using a diesel engine

⚠ **WARNING:** Breathing diesel engine exhaust exposes you to chemicals known to the State of California to cause cancer and birth defects or other reproductive harm.

- Always start and operate the engine in a well-ventilated area.
- If in an enclosed area, vent the exhaust to the outside.
- Do not modify or tamper with the exhaust system.
- Do not idle the engine except as necessary.

For more information go to www.P65warnings.ca.gov/diesel.

26307

©2026 by Crafco All Rights Reserved

### 2.5 Towing or Driving for Transporting with Burner On

The burner in your Crafco machine is designed for operation only while the unit is parked or towed at slow speeds while applying sealant at a jobsite. When driving or towing this machine for transport, the burner shall be turned off. Operating the burner when transporting the machine is a violation of The Code of Federal Regulations, CFR Title 49, Part 392, Subpart G, 392.67 and may cause damage to the burner and/or machine.

| CAUTION |
| --- |
| The burner in your Crafco machine is designed for operation only while the unit is parked or towed at slow speeds while applying sealant at a jobsite. **When driving or towing this machine for transport, the burner shall be turned off.** |

©2026 by Crafco All Rights Reserved

### 2.6 Safety Symbols and Notices

Important safety symbols and notices are marked on the machine and in this manual. Failure to comply could result in equipment damage, operational malfunction, serious injury, or death. Please read and comply with all symbols and notices. The table below includes the most commonly used symbols and notices.

**Table 2-1 Safety Symbols and Notices**

| Symbol | Item | Remarks |
|---|---|---|
| **WARNING** | Warning | Refers to possible bodily injury or death. |
| **CAUTION** | Caution | Refers to possible equipment damage or operational malfunction. |
| | Severe Burn Hazard | Hot material can cause severe burns. |
| | Protective Shoes | Wear hard-soled work shoes. |
| | Protective Gloves | Wear heat-resistant gloves. |
| | Protective Face or Eye Wear | Wear face shield or safety glasses. |
| | Body Crush Hazard | Do not stand between trailer and hitch when hooking melter to truck. |

©2026 by Crafco All Rights Reserved

**Table 2-2 Safety Symbols and Notices (continued)**

| Symbol | Item | Remark |
|---|---|---|
| | Crush Hazard | Keep feet and legs clear. |
| | Pinch Hazard | Keep hands and feet clear. |
| | Exhaust Hazard | Avoid breathing engine exhaust. |
| | Read Manual | Read and understand operator and safety manuals before operating machine. |

©2026 by Crafco All Rights Reserved

# Chapter 3 Warranty Information

### 3.0 Limited Warranty

Crafco (Manufacturer), or one of its affiliated distributors, will replace for the original purchaser free of charge any parts found upon examination by the Manufacturer, to be defective in material or workmanship. This warranty is for a period **two years** from the invoice date, but excludes engine or components, tires, and battery as these items are subject to warranties issued by their manufacturers.

Crafco shall not be liable for parts that have been damaged by accident, alteration, abuse, improper lubrication/maintenance, normal wear, or other cause beyond our control.

The warranty provided herein extends only to the repair and/or replacement of those components on the equipment covered above and does not cover labor costs. The warranty does not extend to incidental or consequential damages incurred as a result of any defect covered by this warranty.

All transportation and labor costs incurred by the purchaser in submitting or repairing covered components must be borne by the purchaser. Crafco specifically disavows any other representation, warranty, or liability related to the condition or use of the product.

The warranty is valid only for parts which have been supplied or recommended by Crafco.

| CAUTION |
| --- |
| Use of replacement parts other than genuine Crafco parts may impair the safety or reliability of your equipment and nullifies any warranty. |

©2026 by Crafco All Rights Reserved

# Chapter 3 Warranty Information

### 3.1 Warranty Claim Instructions

Crafco warrants parts and machinery purchased through Crafco, or one of its affiliated distributors, for two years from the invoice date. Wear items are not covered under the Crafco limited warranty. A wear item is defined as but not limited to: material pumps, sealing tips, tires, etc.

If parts fail to function within two years of invoice date, a return authorization number (RA) must be obtained. If the part was purchased through Crafco please contact Crafco returns department at Returns@Crafco.com for an RA number or if purchased through a Crafco distributor please contact your distributor.

Note: if the part has a serial number associated with it, for example; a machine or electric hose or wand, this must be furnished when requesting the RA number. The customer will be emailed an RA form with all instructions to return the item to Crafco. If the part is found to be within the two year warranty period and has not been abused or modified, a credit will be issued to the customer's account or credit card. The customer may request the part be replaced instead of a credit, if desired.

Note: All engine warranties are covered through the engine manufacturer. If you need information for a distributor in your area please contact us and we will direct you to the closest engine distributor.

All parts returned are tested and evaluated. If the part has been modified in any way without prior consent from a Crafco representative, warranty is void.

Please follow the instructions stated below when calling in a Warranty Claim. Failure to follow these procedures may be cause to void the warranty.

Call your local Crafco Distributor. If you do not know who your local distributor is, call a Crafco Customer Service Representative at 602-276-0406 or email CustomerService@Crafco.com for the name, location and telephone number.

On contacting the distributor, be prepared to identify the serial number, model number, engine number, engine manufacturer, and the date of purchase if available.

Should the cause of the malfunction be a defective part, the Distributor will advise you of the procedure to follow for a replacement.

For expedited service, you can purchase the failed part at the time of setting up the return RA, so the part can be delivered to you sooner. Once we receive the failed part back and inspect it, we can credit you for the part if it was found to be defective.

If you have any additional questions regarding warranty repairs and parts, please do not hesitate to call 480-655-8333 or email Returns@Crafco.com.

For Warranty:
Crafco
25527 South Arizona Avenue
Chandler, AZ 85248
Phone: (480) 655-8333
Returns@Crafco.com

For all other inquires:
CustomerService@Crafco.com

# Chapter 4 Machine Specifications

## 4.0 Machine Specifications

**Table 4-1 Machine Specifications**

| Specification | PN 43600 | PN 57200 | PN 43600DX |
|---|---|---|---|
| Vat Capacity | 132.52 gallons (501.66 liters) | | |
| Melt Capacity | 1064 lbs. (482.6 kg.) per hour | | |
| Heat Transfer Oil Required | 34.8 gallons (131.7 liters) at 70°F | | |
| Tank Construction | Double boiler type | | |
| Tank Opening Size | Single 14” (355.6mm) x 18” (457.2mm) | | |
| Maximum Heat Input | 246,000 BTUs | | |
| Burner and Temperature Control | Diesel-forced air thermostatic control | | |
| Engine, Diesel | Isuzu 3-cyl Model 3CH1 - 23.9 HP @ 3000 RPM | | |
| Drive Mechanism | All hydraulic with infinite speed forward and reverse on material pump. Fixed speed agitator. | | |
| Mixer | Full sweep mixer with 2 horizontal paddles, vertical risers. | | |
| Axle Capacity | Single 5,200 lbs. (2358 kg.) | N/A | Dual 3,500 lbs. (1587 kg.) |
| Tires | ST225/75R15 Load Range D | N/A | ST205/75R-14/8 Load Range C |
| Dry Weight Approximately | 3,310 lbs. (1502 kg.) | 3,125 lbs. (1417 kg.) | 3,550 lbs. (1610 kg.) |
| Diesel Tank Capacity | 26 Gal (98.4L) | | 32 Gal (121.1L) |
| Hydraulic Tank Capacity | 26 Gal (98.4L) | | 32 Gal (121.1L) |

©2026 by Crafco All Rights Reserved

# Chapter 5 Operating Instructions

### 5.0 Operating Instructions

The Crafco Super Shot 125 Diesel Melter was developed to melt Crafco sealants. However, it works well with most road asphalt and federal specification crack or joint sealants.

**Note:** DO NOT attempt to operate the machine without using these and all other instructions.

### 5.1 Preparing the Machine for Start Up

**Table 5-1 Preparing the Machine for Start Up**

| Step | Action |
|---|---|
| 1 | Fill the engine fuel tank with diesel fuel.<br>**Note:** Use No. 1 Diesel fuel in cold weather and No. 2 Diesel fuel in warm weather |
| 2 | Check the oil level in the engine crankcase. (Refer to the manufacturer's instruction for the engine.) |
| 3 | Check the hydraulic fluid level while at a temperature of 70°F (21.1°C). Add fluid if necessary. See Fig. 5-1 Hydraulic Fluid Level and Temp. Gauge |
| 4 | With the machine on level surface, check the heat transfer oil level while at a temperature of 70°F. (21.1°C) The oil should be at the full mark on the dipstick. There are two other full marks representing 0°F (-17.8°C) and 150°F (65.6°C). See Fig. 5-2 Heat Transfer Oil Dip Stick. DO NOT overfill or spillage may occur when the oil is heated and expands. |
| 5 | Make sure all toggle switches are turned "OFF" and all temperature control dials are set to their minimum settings. |
| 6 | Check the oil level in the air compressor if this machine is so equipped. |
| | **WARNING** |
| | The safe operation of this machine is the operator's responsibility.<br>Use extreme care when operating this machine; safety is the result of being careful and paying attention to details. Remember the diesel flame is approximately 2,200°F (1,204.4°C). Some exposed parts of the machine reach 500°F (260°C), the sealant 400°F (204.4°C), and the hydraulic fluid 180°F (85.2°C).<br>Always put on protective clothing, gloves, hard-soled shoes, and safety glasses or a face shield. Be sure that all joints and fittings are tight and leak proof. Immediately replace any hose, that shows any signs of wear, fraying, or splitting. Tighten all bolts, nuts, and screws every 100 hours. |

©2026 by Crafco All Rights Reserved

# Chapter 5 Operating Instructions

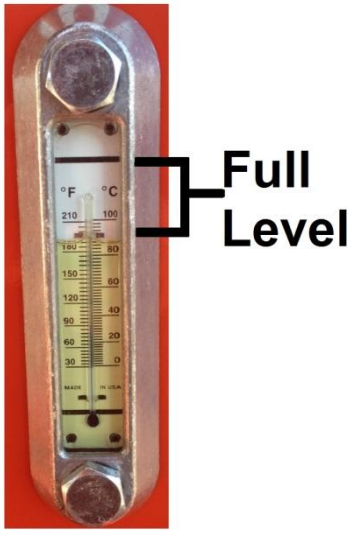


**Fig. 5-1 Hydraulic Fluid Level and Temp. Gauge**

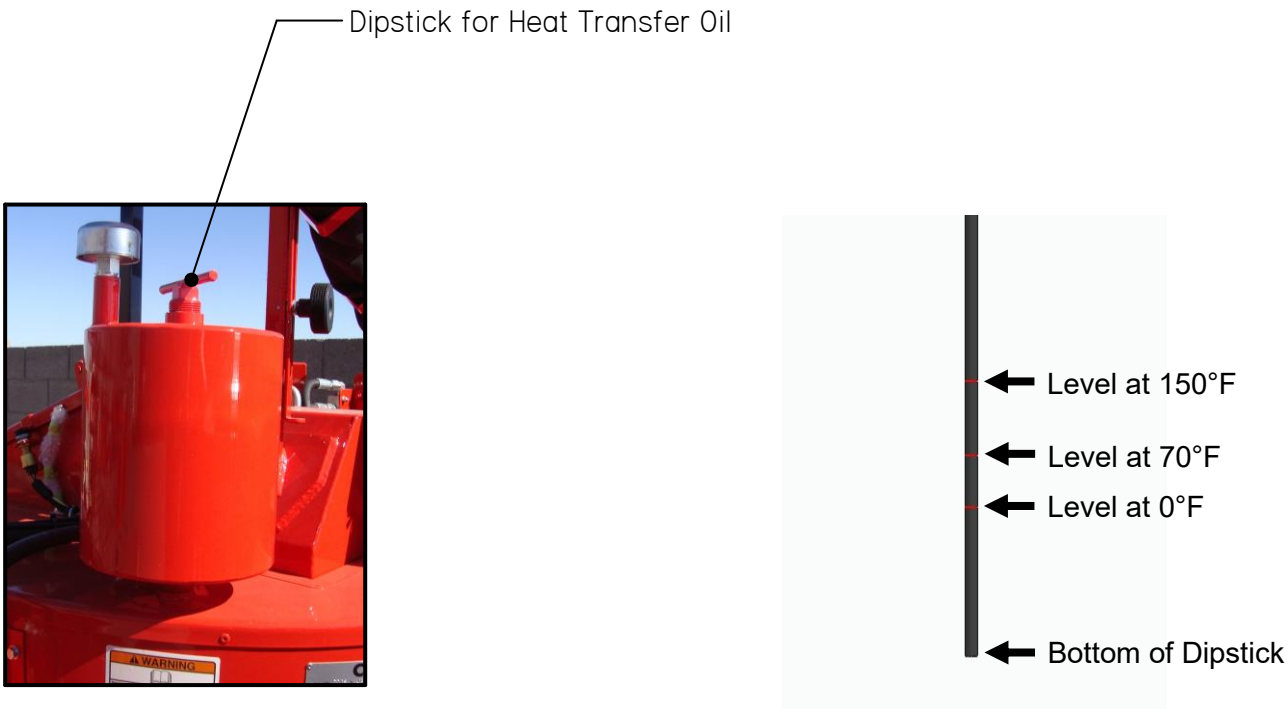


**Fig. 5-2 Heat Transfer Oil Dip Stick**

### 5.2 Machine Start Up for All Models

**Table 5-2 Starting the Burner**

| Step | Action |
|---|---|
| 1 | Fully open the exhaust stack cover. |
| 2 | Start the engine:<br>a) Turn main power key switch to “ON” position<br>b) Make sure engine controller is in AUTO mode (display should show “Waiting to Start”). If not in AUTO mode, press the AUTO mode button once<br>c) Press the “RUN” button once. The engine will not crank immediately, it will first run the fuel pump and heat the glow plugs for several seconds, then engine will crank and start.<br>d) Engine will run at medium idle until the material temperature reaches 275F, at which time, the throttle solenoid on the engine will open the throttle to the running speed which is full throttle. If the engine is started with a warm material tank (over 275F), the engine will run at medium idle for 30 seconds, then the throttle solenoid will open the throttle to the running speed. |
| 3 | Turn the “BURNER” toggle switch in the control box to the “ON” position. The red light marked “BURNER” will illuminate, indicating that the material and hot oil temperatures are below set point. When the red light goes off this indicates the material or oil temperatures are up to the set point.<br>**Note:** Just because this light is illuminated does not indicate the burner is actually working. |
| 4 | Set the heat transfer oil temperature at 500°F (260°C). |
| 5 | Set the material temperature to the manufacturer’s recommended temperature. |
| | **CAUTION** |
| | If the burner fails ignition after 3 attempts the “BURNER LOCKOUT” alarm will sound. To reset burner, hold the “RESET” toggle switch in the “DOWN” position for 5 seconds, then release. The burner should ignite. If the burner still does not ignite, refer to 8.1.1 Symptoms: Burner will Not Ignite to determine the malfunction. |
| | **Important:** The solid material in the tank melts first around the walls and bottom. The material temperature sensor is located by the wall; therefore, it is possible that at the beginning of the melting process the indicated temperature reaches operating temperature, but the material in the center of the tank is still solid. This is normal, and when the heated hose is ready for operation, most of the material in the tank will be melted and heated to the proper application temperature. |
| 6 | Allow the heat transfer oil to continue to heat. |
| 7 | When the material reaches 275°F (135°C), engage the mixer by turning the toggle switch at the hydraulic control panel to “MIXER” position. If the mixer does not move, allow the material to heat longer.<br>**Note:** Mixer speed is preset at the factory and cannot be adjusted. The mixer cannot be engaged until the material reaches 275°F (135°C). |

©2026 by Crafco All Rights Reserved

**Table 5-3 Starting the Burner for Electric Hose (continued)**

| Step | Action |
|---|---|
| | **CAUTION** |
| | Jamming the mixer can cause the hydraulic oil to overheat and damage the machine. |
| 8 | The hose automatically turns “ON” when the material temperature reaches 275°F (135°C). The red light marked ‘HOSE” will illuminate when the hose control is calling for heat. |
| 9 | Adjust the temperature dial to the manufacturer’s recommended temperature.<br>**Note:** The hose reaches operating temperature in approximately 30 minutes. |
| 10 | After the hose reaches the temperature set point, the light in the control box marked “HOSE” turns off. |
| 11 | Reduce the temperature to approximately 360°F (182.2°C).<br>**Note:** We recommend that you run the hose at the suggested temperature setting. |
| | **Important:** The hose must reach 325°F (162.8°C) before dispensing can take place. If the hose does not dispense when the trigger is activated, allow the material to heat longer. If the hose still does not dispense, shut the machine down, locate and remove the plug in the line. |
| | **CAUTION** |
| | DO NOT twist or kink the hose.<br>Avoid sharp bends and continuous twisting by maintaining a minimum 10-inch bend radius.<br>DO NOT use a setting on the hose control of more than 400°F (204.4°C).<br>DO NOT move or bend the hose when cold; it can cause damage to the hose.<br>DO NOT leave the hose cycling for longer than 30 minutes without dispensing material; coking can occur and permanently damage the hose.<br>DO NOT remove the hose from the boom during operation or kinking will occur. |
| | **Important:** It is strongly recommended that the hose be stored in the boom (locked position) when not in use or when in transit. This will prevent twisting or kinking. |

### 5.3 Altitude Compensation System

These units may be equipped with an Altitude Compensation System. If so, there will be a small boxed housing mounted on the engine mount cross member. The system is automatic during most operating conditions. However, if the machine is taken from above or below an altitude of 2,624 ft. (800 Meters) while the engine is running, the engine will need to be stopped and then restarted. There is a yellow indicator light that illuminates when the machine is above 2,624 ft. (800 Meters) indicating that the system is active. For units that don’t, they may run a little rough and smoke from the exhaust when started at high altitudes when cold. Once warm, they will operate normally.

### 5.4 About the Heated Hose, Wand, Valve, and Tip Guard

**The Heated Hose**

The heated hose supplied with the machine is Teflon-lined with steel over-braid. It has a heating element that runs the length of the hose to heat the material within the hose. The hose is covered with high temperature, durable rubber.

**The Wand**

The wand has an aluminum tube to protect both the wand and the operator. The pistol grip actuator is equipped with an electric switch, which, when depressed, sends a signal to actuate the pump. The wand is equipped with a trigger lock to prevent accidental pump actuation when it is not pumping material. The trigger must be in the “LOCKED” position at all times except when intentionally pumping material.

**The Valve**

The wand has a disposable duckbill valve on the end, which shuts off the flow of material when the pump is turned off and prevents excessive dripping of material. This valve also directs the material into a stream for easy application into the crack. Other sealing tips are available. See 10.0 Tools and Accessories for other sealing tips and options.

**Tip Guard**

The wand has a Tip Guard installed at the factory only when a duckbill is installed. This Tip Guard is not required when using a sealing disk or dripless tip adapter. The purpose of this guard is to prolong the life of the duckbill and to protect the operator in the event of a duckbill failure. Ensure this guard is installed properly before operating equipment. See below.

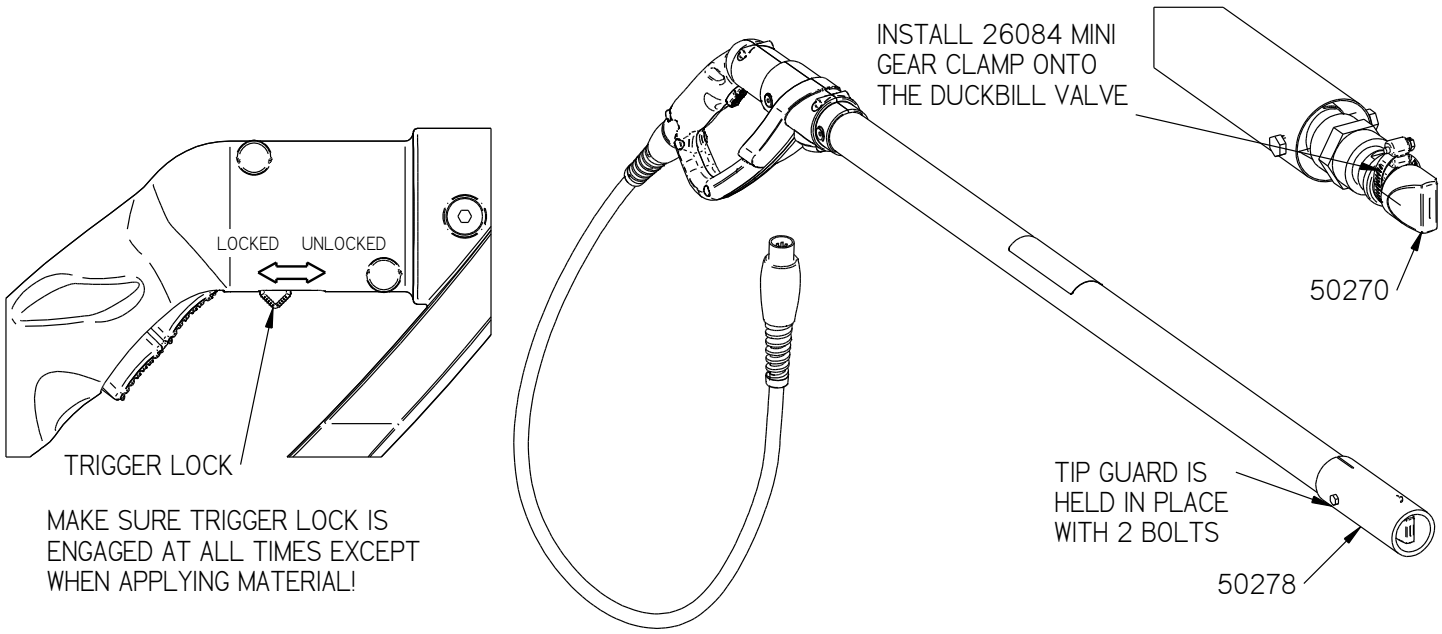


©2026 by Crafco All Rights Reserved

### 5.5 Operating the Electric Hose

**Table 5-4 Operating the Electric Hose**

| Step | Action |
|---|---|
| | **CAUTION** |
| | Twisting and kinking of the electric hose (used on SS60, SS125, and SS250 Melter) causes the hose to fail; the electric heating wires are shorted out to the metal hose cover and the hose stops heating.<br>**Note:** This type of failure is not covered under the Crafco warranty. |
| 1 | Set the hose temperature at 380°F, or manufacturer recommended operating temperature. |
| 2 | Allow the hose to be turned on and heating for a minimum of 30 minutes. |
| 3 | Make sure the hose swivel between the hose and wand moves freely.<br>**Note:** Do not twist or bend hose over sharp edges such as the edge of the frame or tank.<br>Crafco recommends you do not work directly under the boom; this may cause damage to the hose. |
| 4 | Follow all machine instructions in this manual. |

### 5.6 Dispensing the Material

**Table 5-5 Dispensing the Material**

| Step | Action |
|---|---|
| | **WARNING** |
| | Put on protective clothing, gloves, hard-soled shoes, and face shield or safety glasses when operating or filling this machine. Read the entire manual before operating the machine.<br>Never point the wand at any part of your body or at any other person. Hot materials can cause severe burns. |
| | **Important:** Some difficulty may be encountered when starting up on cold days. Although the wand is designed to heat the material all the way down to the tip, on cold days you can place the tip of the wand into the shoebox to facilitate material melting in the valve. Insert the wand tip for only a short time before proceeding. |
| 1 | Allow the material to reach 380°F (139.3°C) and the hose to reach 380°F (139.3°C); or proper operating temperatures. |
| 2 | Turn the pump speed control to the lowest setting by turning the speed control knob fully clockwise. |
| 3 | With the wand tip inserted in the shoebox on top of the melter, depress the trigger on the wand and slowly increase the pump speed by turning the speed control knob counterclockwise until the pump motor starts to turn and material flows from the tip of the duckbill valve. |
| 4 | Adjust the pump speed to the desired rate of flow. |
| 5 | Dispense the material as required.<br>Note: The rate of flow can be varied while the pump is running by rotating the control knob. |

### 5.7 About the Active Screen Pump Protection

The pump is completely encircled by a protective screen. The screen prevents anything larger than ½ inch (1.27 cm) in size to pass from the sealant tank into the pump suction port. The screen continuously rotates 360 degrees around the pump whenever the sealant agitator is engaged. The active screen protects the pump from foreign object damage and self-cleans as it rotates around the sealant pump and suction port.

©2026 by Crafco All Rights Reserved

### 5.8 Loading Material into the Sealant Tank

This unit is equipped with a safety interlock system on the loading door. This system disables the mixer hydraulic system when the lid is open. This is a safety feature for the operator and should never be disabled for any reason.

| WARNING |
|---|
| Personal injury could occur if this safety system is disabled. |

**Table 5-6 Loading Material into the Sealant Tank**

| Step | Action |
|---|---|
| | **WARNING**<br>Following this procedure prevents hot material from getting on operators and causing severe burns. Never throw blocks of material directly into tank. Hot material splash hazard will result. |
| 1 | To load material into the sealant tank, first open the lid. For approximate material volume see Table 5-7 Material Tank Depth Chart |
| 2 | Place the solid material on the lid then close the lid. |
| 3 | Continue adding solid material at intervals to allow the mixer to rotate without jamming.<br>**Note:** If blocks of solid material are added too quickly, jamming results and slows down the melting process. |
| | **Note:** When sealant placement volume is low, or the crew has stopped working for lunch, hot oil and material temperatures can equalize. To lower material temperature add a few blocks of cold sealant. This may not be an option if the tank is full. |

©2026 by Crafco All Rights Reserved

### 5.8.1 Material Tank Depth Chart

Table 5-7 Material Tank Depth Chart

| DEPTH OF MATERIAL TANK (INCHES) | CAPACITY IN GALLONS BOTTOM UP | CAPACITY IN LITERS BOTTOM UP | CAPACITY IN GALLONS TOP DOWN | CAPACITY IN LITERS TOP DOWN |
|---|---|---|---|---|
| 1 | 4.65 | 17.60 | 127.87 | 484.06 |
| 2 | 9.30 | 35.20 | 123.22 | 466.46 |
| 3 | 13.95 | 52.81 | 118.57 | 448.86 |
| 4 | 18.60 | 70.41 | 113.92 | 431.26 |
| 5 | 23.25 | 88.01 | 109.27 | 413.66 |
| 6 | 27.90 | 105.61 | 104.62 | 396.06 |
| 7 | 32.55 | 123.22 | 99.97 | 378.46 |
| 8 | 37.20 | 140.82 | 95.32 | 360.86 |
| 9 | 41.85 | 158.42 | 90.67 | 343.26 |
| 10 | 46.50 | 176.02 | 86.02 | 325.66 |
| 11 | 51.15 | 193.62 | 81.37 | 308.06 |
| 12 | 55.80 | 211.23 | 76.72 | 290.46 |
| 13 | 60.45 | 228.83 | 72.07 | 272.86 |
| 14 | 65.10 | 246.43 | 67.42 | 255.26 |
| 15 | 69.75 | 264.03 | 62.77 | 237.66 |
| 16 | 74.40 | 281.63 | 58.12 | 220.06 |
| 17 | 79.05 | 299.24 | 53.47 | 202.46 |
| 18 | 83.70 | 316.84 | 48.82 | 184.86 |
| 19 | 88.35 | 334.44 | 44.17 | 167.26 |
| 20 | 93.00 | 352.04 | 39.52 | 149.66 |
| 21 | 97.65 | 369.65 | 34.87 | 132.06 |
| 22 | 102.30 | 387.25 | 30.22 | 114.46 |
| 23 | 106.95 | 404.85 | 25.57 | 96.86 |
| 24 | 111.60 | 422.45 | 20.92 | 79.26 |
| 25 | 116.25 | 440.05 | 16.27 | 61.66 |
| 26 | 120.90 | 457.66 | 11.62 | 44.06 |
| 27 | 125.55 | 475.26 | 6.97 | 26.46 |
| 28 | 130.20 | 492.86 | 2.32 | 8.86 |
| 28.5 | 132.52 | 501.66 | 0 | 0.00 |

©2026 by Crafco All Rights Reserved

### 5.9 Shutting Down and Cleaning Out the Machine, All Models

**Table 5-8 Shutting Down and Cleaning Out the Machine, All Models**

| Step | Action |
|---|---|
| | **CAUTION** |
| | When shutting down the machine for the day, Crafco recommends leaving the melter about half full of material. This will give a fairly rapid heat up rate in the morning but allows enough material to start dispensing right away when the material becomes molten. |
| 1 | Leaving the hose in the boom, swing the boom toward the front of the machine and lock the boom into position with the latch provided. |
| | **CAUTION** |
| | DO NOT kink or twist the hose or permanent damage may result. |
| 2 | Place the wand in the wand holder and lock the wand into position with the latch provided. |
| 3 | Place the hose in the hose guide and secure with the Velcro straps. |
| 4 | Reverse the pump approximately 30 more seconds. |
| 5 | Turn the mixer toggle switch to the “CENTER” position. |
| 5 | Turn the burner toggle switch to the “OFF” position. |
| 6 | Stop the engine by pressing the “OFF” button on the engine controller. The engine will go into an “IDLE COOL” for ten seconds and then the engine will shut down and stop. |
| 7 | Turn the “MAIN POWER” switch to the “OFF” position. |

©2026 by Crafco All Rights Reserved

### 5.10 Storing the Electric Hose for Transport

**Table 5-9 Hose for Transport Instructions**

| Step | Action |
|---|---|
| 1 | Leave the hose in the boom, swing the boom toward the front of the machine and lock the boom into position with the latch provided. |
| 2 | Place the wand in the wand holder and lock the wand into position with the latch provided. |
| 3 | Place the hose in the hose guide and secure with the Velcro strap. |
| | **CAUTION** |
| | Hose damage occurs if:<br>The hose is bent or moved when cold.<br>The hose is twisted or bent at a sharp radius.<br>The hose is moved before being heated a minimum of 30 minutes and set at 380°F.<br>The operator crosses over or under the hose, causing the wires between the hose and wand connection to twist or wrap up.<br>The swivel is cold and is not flexible, which can cause the hose to twist.<br>The wiring between the hose and the wand is pulled, stressed, or used to support the wand. |

©2026 by Crafco All Rights Reserved

### 5.11 Overnight Heater Use

An overnight heater rod is available as an option. 24190 110V and 24194 220V. The overnight heater may be used to maintain an overnight heat transfer oil temperature of approximately 200-250°F (93.3°C)

**Table 5-10 Overnight Heater Use**

| Step | Action |
|---|---|
| | **WARNING** |
| | The overnight heaters are for overnight use only. If the overnight heater is used, the material must be dispensed the next day. If the material can't be dispensed, the machine needs to be heated to mixing temperatures, and agitated to prevent settling. If you don't dispense the material after 1 night's use, you risk damaging the material and possibly the machine due to settled material, which can harden in the bottom of the material tank |
| 1 | Attach the heater power cord to a suitable extension cord. |
| 2 | Attach the extension cord to its own outlet rated for 15 amps minimum. |
| | **WARNING** |
| | Suitable extension cord size requirements for **110 Volt** use:<br>25-50 FT • 16-20 Amps • 12 Gauge (Heavy Duty) or 10 Gauge (Extra Heavy Duty)<br>100 FT • 16-20 Amps • 10 Gauge (Extra Heavy Duty)<br><br>Suitable extension cord size requirements for **220 Volt** use:<br>25-50 FT • 8-10 Amps • 14 Gauge (Medium Duty) or 12 Gauge (Heavy Duty)<br>100 FT • 8-10 Amps • 12 Gauge (Heavy Duty)<br><br>**Failure to use the correct size extension cord could result in damage and possible fire!** |
| 3 | Disconnect the heater when using the machine's burner system. |
| | **CAUTION** |
| | Do not use the heater without heat transfer oil in the tank. Doing so will overheat and damage the heater, and it will have to be replaced. |

©2026 by Crafco All Rights Reserved

### 5.12 Mounting a Skid Machine

**Table 5-11 Mounting a Skid Machine**

| Step | Action |
|---|---|
| | **WARNING** |
| | The truck needs to be of proper size to hold the loaded weight and size of the machine and any extra material to be carried. The center of gravity of the loaded machine should be above or in front of the rear main axle. Contact Crafco for help in determining the location of the center of gravity of your machine before mounting.<br><br>Helmet, gloves, safety glasses, and safety shoes must be worn when mounting a skid machine. |
| | **WARNING** |
| | Adequate equipment and lifting devices with sufficient capacity must be used to raise and move the machine from the bottom frame/skid tubes of the machine for loading purposes. Do not use lugs on top of tank for lifting purposes. |
| | **WARNING** |
| | Only mount the unit to a metal truck bed or any other non-flammable surface that can support the weight of the machine.<br><br>**Failure to use the correct mounting surface could result in damage and possible fire!** |
| | **WARNING** |
| | Mount the machine a minimum of 3” (76mm) above the truck bed. Depending on the machine and airflow, you may have to mount it higher to prevent excessive temperatures on the machine and truck bed. |
| 1 | Mount with four ½” diameter Grade 5 bolts (or 12mm Grade 10.9) minimum, using the loading tubes at each corner of the machine to secure it in place. |
| | **WARNING** |
| | Leave 15” (381mm) clearance around the machine. Keep this area clear of any flammable material such as empty sealant boxes.<br><br>**Failure to keep this area clear could result in damage and possible fire!** |

©2026 by Crafco All Rights Reserved

TYPICAL SKID MOUNT GUIDELINES

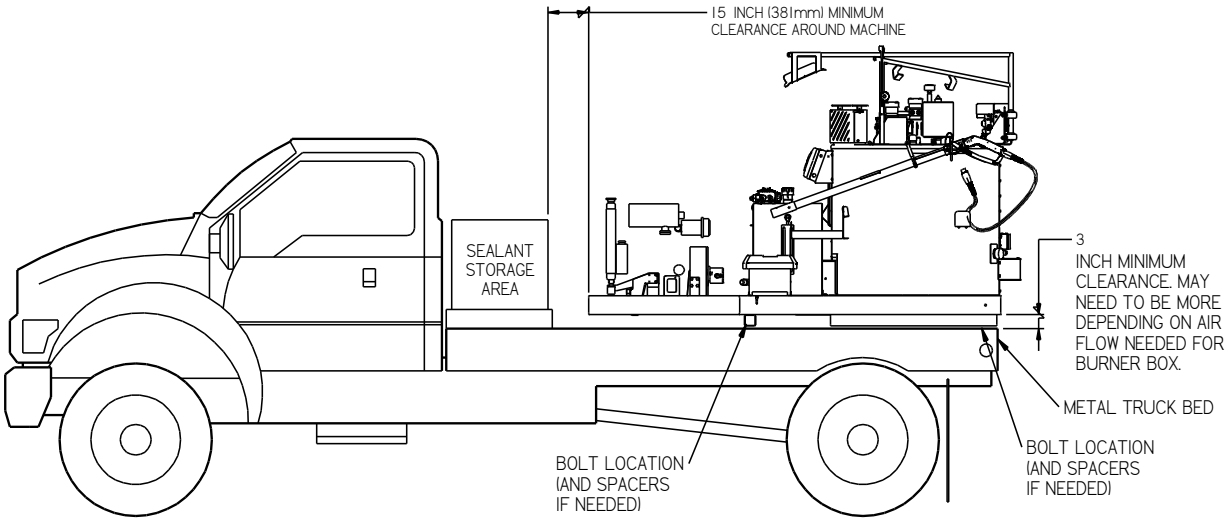

### 5.13 Shot Timer Option

This option is used to place marker adhesive on the road surface for raised reflective markers. This option will allow you to place the same shot size of material each time you pull the wand trigger. The steps listed below will tell you how to operate the shot timer option.

**Table 5-12 Shot Timer Option**

| Step | Action |
|---|---|
| | **WARNING** |
| | Put on protective clothing, gloves, hard-soled shoes, and face shield or safety glasses when operating or filling this machine. Read the entire manual before operating the machine.<br>Never point the wand at any part of your body or at any other person. Hot materials can cause severe burns. |
| | **Important:** Some difficulty may be encountered when starting up on cold days. Although the wand is designed to heat the material all the way down to the tip, on cold days you can place the tip of the wand into the shoebox to facilitate material melting in the valve. Insert the wand tip for only a short time before proceeding. |
| 1 | Allow the material to reach 380°F (139.3°C) and the hose to reach 380°F (139.3°C); or proper operating temperatures. |
| 2 | Locate the toggle switch inside the trigger control and shot timer box labeled “MODE” is toward the “CRACK SEAL” (It will be near the junction box). |
| 3 | Turn the pump speed control to the lowest setting by turning the speed control knob fully clockwise (Located on the boom base). |
| 4 | With the wand tip inserted in the shoebox on top of the melter, depress the trigger on the wand and slowly increase the pump speed by turning the speed control knob counterclockwise until the pump motor starts to turn and material flows from the tip of the duckbill valve. |
| 5 | Once the material is flowing properly release the wand trigger and change the toggle switch labeled “MODE” to “Marker”. |

©2026 by Crafco All Rights Reserved

**Table 5-13 Shot Timer Option (continued)**

| Step | Action |
|---|---|
| 6 | Inside this shot timer box is a knob that controls how long the pump stays running each time you pull the trigger (1/4 to 5 seconds). Crafco recommends setting the dial between ¼ and ½ for the shot size. |
| 7 | Use the pump speed control to make the final adjustment to the size of the shot needed for the job. |
| | **WARNING** |
| 8 | While in the “MARKER” mode the material pump turns for the duration of time set by the shot size dial. Once the wand trigger is pulled the pump will not stop until the time expires even if the wand trigger is released. |
| 9 | When the material flow stops the system is ready to be started again, release the wand trigger and pull the wand trigger when you are ready for the next shot. |
| 10 | At the end of the day use the pump reverse toggle switch located at the rear of the machine. Reverse the material pump for at least 30 seconds.<br>Note: The pump mode does not change the way the pump reverse works. |

### 5.13.1 Shot Timer Troubleshooting Manual

This option comes with an additional manual that covers troubleshooting; electrical schematic and parts break down. Please refer to this additional manual when needed. This manual is part number 38017N Shot Timer and Trigger Control Kit

### 5.14 Storing the Machine

Store the machine in an area where moisture cannot enter the heating system-- the heat transfer oil tank, etc. Extended down time can cause moisture build up in the heating tank.

Evidence that moisture has collected in the heat transfer oil is a constant popping noise. If this popping noise is heard, warm the heat transfer oil to 300°F (149°C) for two to three hours to evaporate the moisture. Failure to follow this procedure will cause the heat transfer oil to overflow the tank, resulting in possible machine damage and/or personal injury.

Best practice is to check in the material tank prior to starting the burner. If water is present, try and remove as much as possible. If the water is not noticed, heat the material to 300°F (149°C) for two to three hours to evaporate the moisture. Failure to follow this procedure will cause the material to overflow the tank, resulting in possible machine damage and/or personal injury.

Store the machine for longer periods with the material tank empty.

©2026 by Crafco All Rights Reserved

# Chapter 6 Maintenance Instructions

### 6.0 Maintenance Instructions

This chapter contains all normal maintenance instructions to properly maintain your machine.

### 6.1 Engine

Refer to the manufacturer's operating and maintenance instructions for the engine.

### 6.2 Hydraulic System

Check hydraulic fluid daily. See Table 5-1 Preparing the Machine for Start Up Step 3.

Change hydraulic filter every 250 hours of machine operation. Replace if necessary.

Change hydraulic fluid every 500 hours of operation.

### 6.3 Heat Transfer Oil

Check the oil level at the start of every day. See Table 5-1 Preparing the Machine for Start Up Step 4.

Change the oil every 500 hours of machine operation or every year, whichever comes first. Failure to follow this oil change interval will result in machine damage.

### 6.4 Wheel Bearing

Pack the wheel bearing every 24,000 miles (38,624 km) or every two years, whichever comes first. Use a good grade of bearing grease.

### 6.5 Material Sensor Tube

Check for heat transfer oil in tube every 50 hours of operation. 2 ounces (59.1 ml) required.

©2026 by Crafco All Rights Reserved

# Chapter 6 Maintenance Instructions

### 6.6 Cleaning Material Tank and Sensor Area

The material tank needs to be cleaned every year, or as needed, for proper operation. As the machine is used, material builds up around the tank walls and sensor guard. The built-up material prevents heat from getting to the fresh material and causes longer heat up times. The built-up material will also prevent the material temperature sensor from reading accurately because it becomes insulated from the fresh material. The coked material needs to be scraped or chipped from the tank walls. The area between the sensor and sensor guard needs to be cleaned also for proper temperature sensing. An air chisel with various sized blades usually works best to break up the material and remove it from the walls. Once the walls and sensor guard areas are cleaned, remove all the loose chunks from the tank, and vacuum out any smaller pieces.

### 6.7 Lug Nuts

Torque all nuts/bolts before first road use and after each wheel removal. Check and torque after the first 10 miles (16 km), 25 miles (40 km), and again at 50 miles (80 km). Check periodically thereafter.

Torque in stages as follows:

First stage 20-25 foot-pound (ft-lb) (89-111 N)

Second stage 50-60 foot pound (ft-lb) (222-266 N)

Third stage 90-120 foot pound (ft-lb) (400-534 N)

Tighten bolts and nuts in the sequence shown in Fig. 6-1 Lug bolt Tightening Sequence.

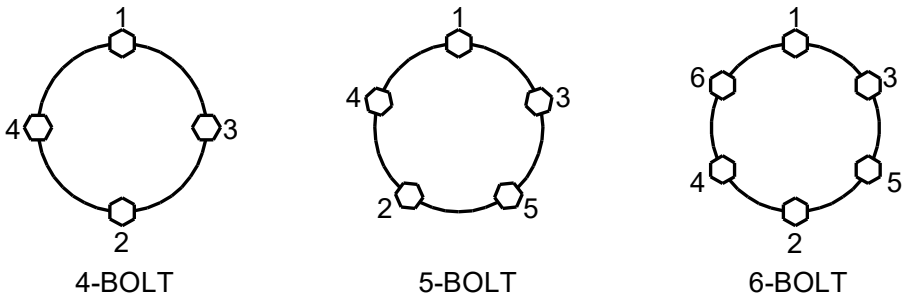


**Fig. 6-1 Lug bolt Tightening Sequence**

### 6.8 Brakes

Check the brakes daily.

### 6.9 Tongue Jack

Lubricate the tongue jack, using a good grade of bearing grease.

©2026 by Crafco All Rights Reserved

### 6.10 Temperature Control Calibration

Check the control knob calibration weekly. Calibrate by turning the knob counterclockwise. If the marks do not align, loosen screw in knob and align the line on the control knob with the calibration mark on the scale plate. (See Fig. 6-2 Temperature Control Calibration)

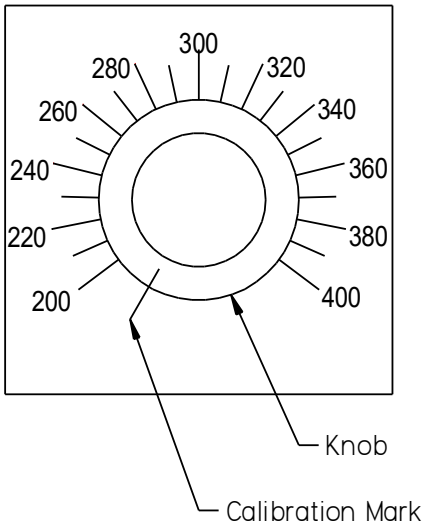


**Fig. 6-2 Temperature Control Calibration**

### 6.11 Cleaning the Melter

We recommend using Orange-Sol industrial cleaner for cleaning the exterior of the machine. The cleaner can be found at the following website: https://www.orange-sol.com/industrial-formula/.

©2026 by Crafco All Rights Reserved

### 6.12 Maintenance Chart

**Table 6-1 Maintenance Chart**

| | | Hours | | | |
|---|---|---|---|---|---|
| Possible Cause | Procedure | 8 | 50 | 250 | 500 |
| Engine Check Oil Level | Refer to the manufacturer's instructions for the engine | X | | | |
| Engine Air Filter(s) | Change the primary filter when restriction indicator says to. See Fig. 9-12 Engine Assembly: PN 47125N | | | | |
| Engine Radiator | Check and clean fins with water | | | | X |
| Other Engine Maintenance | Refer to the manufacturer's operating and maintenance instructions for the engine | | | | |
| Material Sensor Tube | Check for HTO fluid | | X | | |
| | Add | As needed | | | |
| Heat Transfer Oil | Check | X | | | |
| | Change | | | | X |
| Hydraulic Oil | Check | X | | | |
| | Change | | | | X |
| Hydraulic Oil Filter | Change | | | X | |
| Burner | Check burner box insulation | | | | X |
| | Clean CAD cell | | | | X |
| | Check Electrodes | | | | X |
| | Check Flame Retainer/Head | | | | X |
| | Replace burner nozzle | | | | X |
| | Replace fuel filter | | | | X |
| Wheel Bearings | Clean and re-pack using a good grade of bearing grease | Every 24,000 miles (38,624 km) or two years | | | |
| Tongue Jack | Grease using a good grade of bearing grease | Once a year | | | |
| Material Tank | Scrape out built up material in the material tank | Once a year or as needed | | | |
| Material Sensor Guard | Scrape out built up material around guard | | | | X |
| Flex Boom Bearings | Grease using a good grade of bearing grease | Once a year | | | |

For a list of parts required for maintenance see Table 6-3 General Maintenance Parts.

### 6.13 Service Instructions

**Table 6-2 Service Instructions**

| Step | Action |
|---|---|
| 1 | Do a general inspection of the machine at least once a week. |
| 2 | Replace all worn or damaged parts.<br>**Note:** Keep regular replacement items in stock for emergency repairs to prevent costly downtime. See Table 6-5 Recommended Spare Parts |
| 3 | Make necessary adjustments and tighten all loose nuts or screws. |
| 4 | Watch for leaks. Tighten fittings or repair as necessary. |
| 5 | Clean the external surfaces of the machine at regular intervals.<br>**Note:** Refer to the material manufacturer's instructions for recommendations. |
| 6 | Follow the recommended maintenance per Table 6-1 Maintenance Chart |

For service, find a list of authorized Distributors and service centers at Crafco.com/Distributors.

### 6.14 General Maintenance Parts

**Table 6-3 General Maintenance Parts**

| Legend | |
|---|---|
| PN 43600 | Super Shot 125 Diesel Melter |
| PN 57200 | Super Shot 125 Diesel Melter Skid Mount |
| PN 43600DX | Super Shot 125 Diesel Melter Dual Axle |

**Table 6-4 General Maintenance Parts (continued)**

| 43600, 57200 and 43600DX | | |
|---|---|---|
| **Quantity** | **Description** | **Part No.** |
| 1 | Fuel Filter, Engines & Burner | 41867 |
| 1 | Oil Filter | 45389 |
| 1 | Air Filter | 45391 |
| 1 | Nozzle, Burner 1.5x80B | 41883 |
| 1 | Hydraulic Oil Filter | 45438 |
| Table 6-6 | Hydraulic Oil | Table 6-6 |
| Table 6-6 | Heat Transfer Oil | Table 6-7 |

### 6.15 Recommended Spare Parts

**Table 6-5 Recommended Spare Parts**

| Quantity | Description | Machine | Part No. |
|---|---|---|---|
| 1 | Temperature Controller, Material | All | 51672 |
| 1 | Temperature Controller, Electric Hose | All | 51691 |
| 1 | Temperature Controller, Hot Oil | All | 43391 |
| 1 | DC Controller | All | 42335 |
| 1 | Coupling, Fuel Pump | All | 41970 |
| 1 | Electric Hose, 18’ | All | 52405 |
| 1 | 48” Electric Wand | All | 52200 |

©2026 by Crafco All Rights Reserved

### 6.16 Recommended Fluids and Lubricants

**Table 6-6 Recommended Fluids and Lubricants**

| 43600 and 57200 | | |
|---|---|---|
| **Application** | **Recommended** | **Full Point** |
| Fuel | Diesel #2 Warm Climate<br>Diesel #1 Cold Climate | 26 Gal (98 l) |
| Engine Oil | Refer to engine manual | Refer to engine manual |
| Hydraulic Oil | Shell AW Hydraulic 46 | 24 Gal (90 l) |
| Heat Transfer Oil | Shell Turbo T 68 (Group II) | 31.2 Gal (118 l) |

| 43600DX | | |
|---|---|---|
| **Application** | **Recommended** | **Full Point** |
| Fuel | Diesel #2 Warm Climate<br>Diesel #1 Cold Climate | 32 Gal (121 l) |
| Engine Oil | Refer to engine manual | Refer to engine manual |
| Hydraulic Oil | Shell AW Hydraulic 46 | 30 Gal (113 l) |
| Heat Transfer Oil | Shell Turbo T 68 (Group II) | 31.2 Gal (118 l) |

©2026 by Crafco All Rights Reserved

### 6.17 Applicable Brands of Heat Transfer Oil

**Table 6-7 Applicable Brand of Heat Transfer Oil**

| Manufacturer | Product Name | Crafco Heat Transfer Fluid |
|---|---|---|
| Chevron | Heat Transfer Oil Grade 46 | Shell Turbo T 68 (Group II) |
| Citgo | Hytherm Oil 46 | Shell Turbo T 68 (Group II) |
| Conoco | Hydroclear Heat Transfer Oil | Shell Turbo T 68 (Group II) |
| Fina | Vulcan Heat Transfer Oil 46 | Shell Turbo T 68 (Group II) |
| Lubrication Engineers | Heat Transfer Oil | Shell Turbo T 68 (Group II) |
| Exxon Mobile | Caloria HT 43 | Shell Turbo T 68 (Group II) |
| Mobil | Mobiltherm 43 | Shell Turbo T 68 (Group II) |
| Mobil | Mobiltherm 603 | Shell Turbo T 68 (Group II) |
| Phillips 66 | Heat Transfer Oil #3 | Shell Turbo T 68 (Group II) |
| Phillips 66 | Magnus Oil 68 | Shell Turbo T 68 (Group II) |
| **CAUTION** | | |
| The heat transfer oil in this machine is a grade that has been tested and recommended by Crafco Using a grade of oil not specifically recommended by Crafco is cause for warranties to be voided.<br>All oils subjected to high temperatures deteriorate with time and lose many of their characteristics. Tests conducted by Crafco have determined that for best results and safety, the heat transfer oil in this machine must be drained and replaced with Crafco recommended oil after five hundred (500) hours of machine operation or one (1) year, whichever occurs first. | | |

### 6.18 Typical Heat Transfer Oil Specifications

| | |
|---|---|
| ISO | 68 |
| Flash Point, COC | 445°F (229.4°C) |
| Viscosity @ 100°F-SUS | 325 |
| Viscosity @ 210°F-SUS | 50 |
| Viscosity Index | 95-100 |
| Pour Point | 0°F (-17.8°C) |
| Carbon Residue | 1% |

©2026 by Crafco All Rights Reserved

### 6.19 Changing the Heat Transfer Oil

**Table 6-8 Changing the Heat Transfer Oil**

| Step | Action |
|---|---|
| 1 | To facilitate easier draining of the heat transfer oil, heat the oil to approximately 100°F (38°C). |
| | **WARNING** |
| | Wear proper PPE (safety glasses, face shield, gloves, long sleeve shirt) to prevent bodily injury while servicing the heat transfer oil. |
| 2 | Locate the heat transfer oil drain plug on the underside of the melter directly below the material tank. See Fig. 6-3 Heat Transfer Oil Drain and Fill Ports |
| 3 | Remove the pipe cap from the drainpipe with a pipe wrench and allow the oil to drain into an appropriately sized container.<br>**Note:** It may be necessary to use a second wrench to keep the drainpipe from turning. |
| 4 | If oil fails to drain from the tank, this may be an indication that the oil has crystalized (coked up) inside of the drainpipe. Use a long screwdriver or steel rod to break up the hardened material from the drainpipe to allow the oil to flow.<br>**Note:** Raise the front of the machine slightly to allow oil to flow towards the drainpipe. |
| 5 | As an alternative draining method, a 1/4" schedule 40 pipe attached to an oil pump, can be inserted through the HTO fill port or through the expansion tank where the dipstick is located. The end of the pipe should be cut at a slight angle to prevent blocking of the pipe, so the oil can be pumped out. Make sure the pipe is long enough to go to the bottom of the tank. |
| 6 | After the oil has completely drained, replace the pipe cap onto the drainpipe and fill the tank to the correct level on the dipstick with a recommended oil that meets ISO 68 specification. See section 6.17 and 6.18. Also see Table 5-1, step 4 for checking HTO level. |
| | **CAUTION** |
| | Do not overfill the heat transfer oil tank as the oil expands when heated and may overflow. |

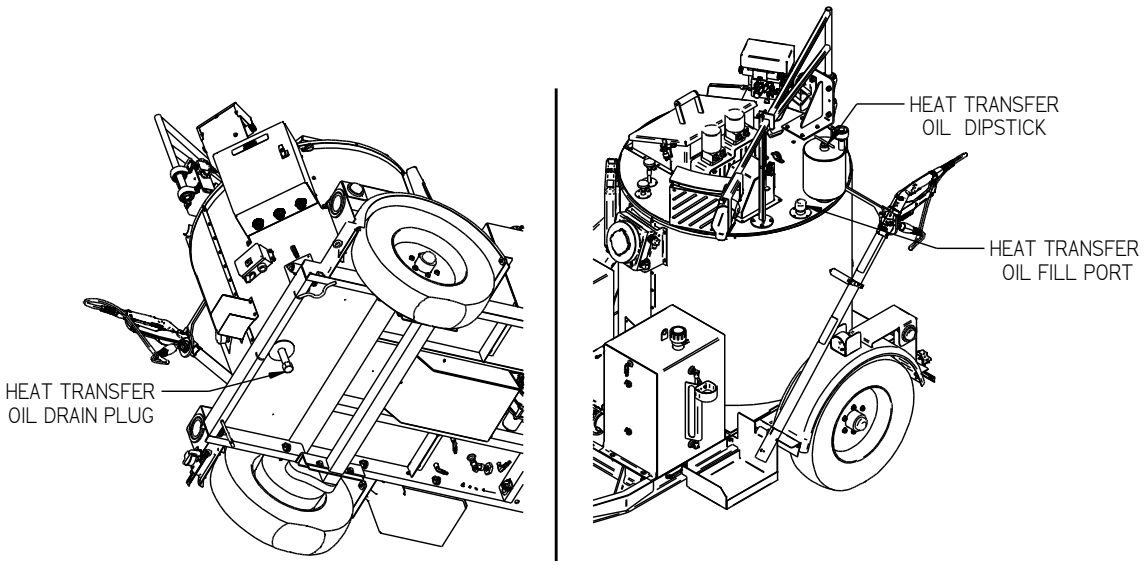


**Fig. 6-3 Heat Transfer Oil Drain and Fill Ports**

©2026 by Crafco All Rights Reserved

### 6.20 Material Pump Replacement

**Table 6-9 Material Pump Replacement**

| Step | Action |
|---|---|
| 1 | Bring the melter to temperature as preparation to drain the sealant tank. |
| 2 | Remove the pipe cap located at the rear of the machine and drain the sealant tank. |
| | **WARNING**<br>The material in the sealant tank is extremely hot. Bodily contact with hot sealant can cause severe burns.<br>The high operating temperatures of this machine and the sealant it contains require that protective clothing, gloves, hard-soled shoes, and safety glasses or a face shield be worn at all times by operators of the machine. |
| 3 | Remove both guards from the motor mount to access the chain and the sprockets. |
| 4 | Rotate both the agitator and pump shafts until the connecting link and set screws are accessible. (See Fig. 6-4 Agitator and Pump Shaft Alignment) |

**Fig. 6-4 Agitator and Pump Shaft Alignment**

**Table 6-10 Material Pump Replacement (continued)**

| Step | Action |
|---|---|
| 5 | Disassemble the connecting link and remove the drive chain. |
| 6 | Loosen the set screw in the lower coupling half located between the hydraulic motor and the material pump drive shaft. |
| 7 | Remove the four (4) hydraulic hoses and put caps on all the ports.<br>**Note**: Mark the hoses for ease of replacement. |
| 8 | Remove the four (4) bolts holding the motor mount on top of the melter. |
| 9 | Lift off the motor mount and set aside. |
| 10 | Remove the pump drive shaft from the center of the agitator shaft. |
| 11 | Remove the two (2) bolts holding the agitator shaft bearing.<br>**Note**: Do not remove the bearing from the agitator shaft. |

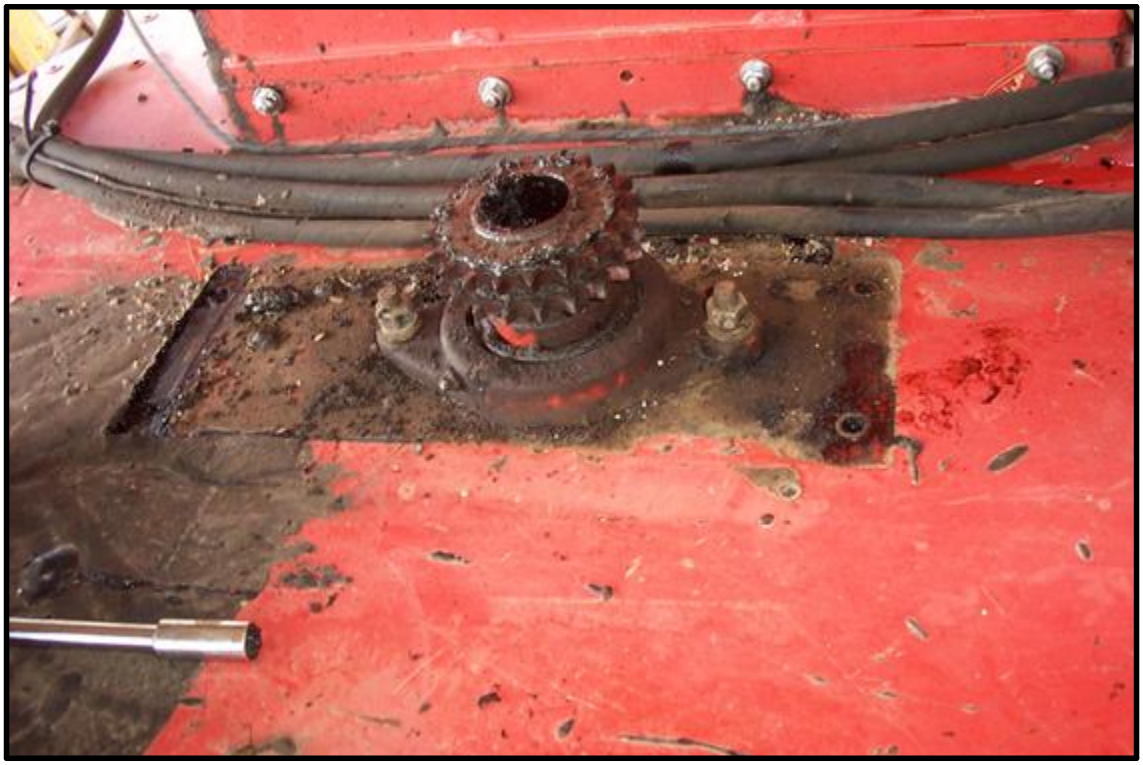

**Fig. 6-5 Removal of Motor Mount Assembly**

©2026 by Crafco All Rights Reserved

**Table 6-11 Material Pump Replacement (continued)**

| Step | Action |
|---|---|
| 12 | When the unit has cooled sufficiently, remove the six (6) bolts holding the paddles on top of the screen. |
| 13 | Remove the paddles from the tank. |
| 14 | Lift the agitator shaft and screen assembly as high as possible and insert a screwdriver into the shaft hole.<br>**Note**: This will support the assembly while removing the pump from the tank. |

**Fig. 6-6 Supporting the Agitator Away from the Material Pump**

**Table 6-12 Material Pump Replacement (continued)**

| Step | Action |
|---|---|
| 15 | Remove the six (6) bolts attaching the pump to the tank.<br>**Note**: A clean pump was used in the figure below for clarity. |
| 16 | Lift the pump from the sealant tank. |
| | **WARNING** |
| | Crush Hazard. The pump weighs approximately 90 pounds (40.8 kg). Take precautions not to drop the pump on any part of your body or pinch any part of your body between the pump and another object. |

**Fig. 6-7 Unbolting the Material Pump**

**Table 6-13 Material Pump Replacement (continued)**

| Step | Action |
|---|---|
| 17 | Clean any sealant from the top of the pump mounting plate and clean the shaft holes. (See Fig. 6-8 Cleaning of the Pump Mounting Plate) |
| | **CAUTION** |
| | Premature pump wear results if the pump mounting plate and bolt holes are not properly cleaned. |

**Fig. 6-8 Cleaning of the Pump Mounting Plate**

**Table 6-14 Material Pump Replacement (continued)**

| Step | Action |
|---|---|
| 18 | Make sure that the pump shaft coupling fits correctly onto the new material pump before mounting the material pump inside the tank. Also make sure the pump spins freely. |

**Fig. 6-9 Pump Drive Shaft Dry Fit to Material Pump**

**Table 6-15 Material Pump Replacement (continued)**

| Step | Action |
|---|---|
| 19 | Make sure the 1” material port matches the 1” hole in the pump plate; there should be an alignment pin in the pump plate to insure the correct positioning. Use new hardware to secure the material pump to the pump plate (6) 28739 3/8”-16 x 5” bolt with (6) 28647 3/8” lock washer. Torque these six bolts at 33 lb.-ft.<br>**Note**: Make sure the material pump shaft spins freely after torquing these bolts. |

**Fig. 6-10 New Material Pump Mounting**

**Table 6-16 Material Pump Replacement (continued)**

| Step | Action |
|---|---|
| 20 | Crafco recommends that you use a new screen assembly to ensure the agitator and paddles have good threads to secure with, along with new hardware. (See Fig. 6-11 Agitator Shaft and Paddles Mounting) |
| 21 | Remove the paddles from the old screen assembly and bolt them to the new screen assembly, using (10) 28760 ½”-13 x 1” bolts with (10) 29065N ½” Nord lock washers. The use of Loctite on the threads before assembling is also recommended. Torque these bolts to 80 lb.-ft. |
| 22 | Place the material screen and paddle assembly onto the material pump. Lower the agitator shaft down onto the screen assembly and secure it with (4) 28760 ½”-13 x 1” bolts with (4) 29065N ½” Nord lock washers. The use of Loctite on the threads before assembling is also recommended. Torque these bolts to 80 lb.-ft. |

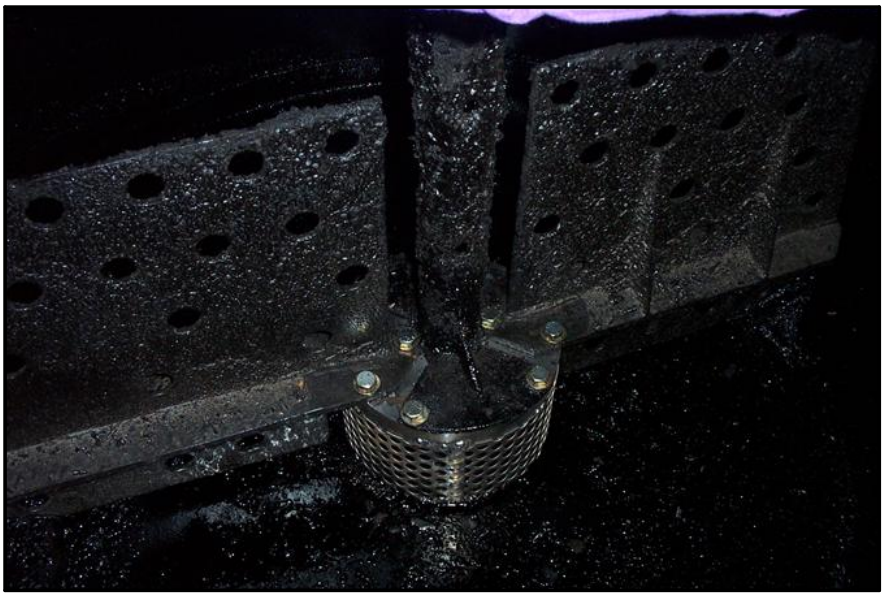

**Fig. 6-11 Agitator Shaft and Paddles Mounting**

**Table 6-17 Material Pump Replacement (continued)**

| Step | Action |
|---|---|
| 23 | Use part number 47970N Washer, Alignment to properly align the shaft inside the agitator shaft.<br>**Note**: This washer may wear out or melt between material pump changes.<br>**Note**: A clean pump drive shaft and agitator shaft was used in the figure below for clarity. |

**Fig. 6-12 Alignment Washer**

©2026 by Crafco All Rights Reserved

**Table 6-18 Material Pump Replacement (continued)**

| Step | Action |
|---|---|
| 24 | Secure the agitator bearing using new hardware (2) 28642 ½" grade 8 washers, (2) 28649 ½" lock washer and (2) 28504 ½-13 hex nut .<br>**Note**: Make sure the agitator spins freely at this point. |
| 25 | Place the pump shaft into the agitator shaft. You might need to spin the pump shaft to get the keyway in the pump shaft coupling to align with the material pump shaft<br>**Note**: Make sure when the pump shaft spins the material pump spins as well. |

**Fig. 6-13 Pump Shaft Placement**

**Table 6-19 Material Pump Replacement (continued)**

| Step | Action |
|---|---|
| 26 | Place the motor mounting bracket back into place, using new hardware (4) 28716 5/16”-18 x 1” bolt and (4) 29063 5/16” Nord lock washer. |
| 27 | Slide the pump shaft onto the hydraulic motor shaft and tighten the set screws. |

**Fig. 6-14 Pump Shaft to Hydraulic Pump Motor Placement**

©2026 by Crafco All Rights Reserved

**Table 6-20 Material Pump Replacement (continued)**

| Step | Action |
|---|---|
| 28 | Loosen the four bolts holding the agitator hydraulic motor in place and slide it toward the material pump hydraulic motor. |
| 29 | Using a new chain assembly, wrap the double chain around both sprockets, with the master link provided with the chain. |
| 30 | Insert the master link from below up through the chain assembly first row, then add two spacers, then push the master lick through the second row of the double chain, then add the last spacer and the locking clip. |

**Fig. 6-15 Agitator Connecting Link**

©2026 by Crafco All Rights Reserved

**Table 6-21 Material Pump Replacement (continued)**

| Step | Action |
|---|---|
| 31 | Slide the agitator hydraulic motor away from the material pump hydraulic motor to tighten the agitator chain and then tighten the (4) bolts that hold the agitator hydraulic motor in place. |
| 32 | Place both chain guards back into place and replace all four of the hydraulic hoses. |

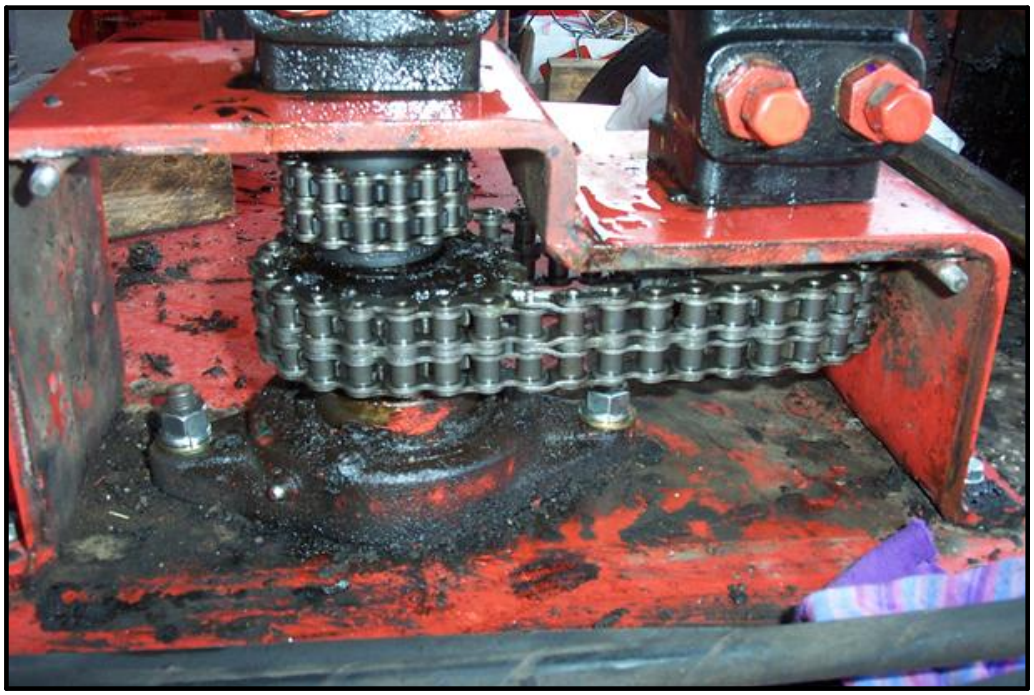

**Fig. 6-16 Agitator Chain Tightening Steps**

©2026 by Crafco All Rights Reserved

### 6.21 Flex Boom Adjustment

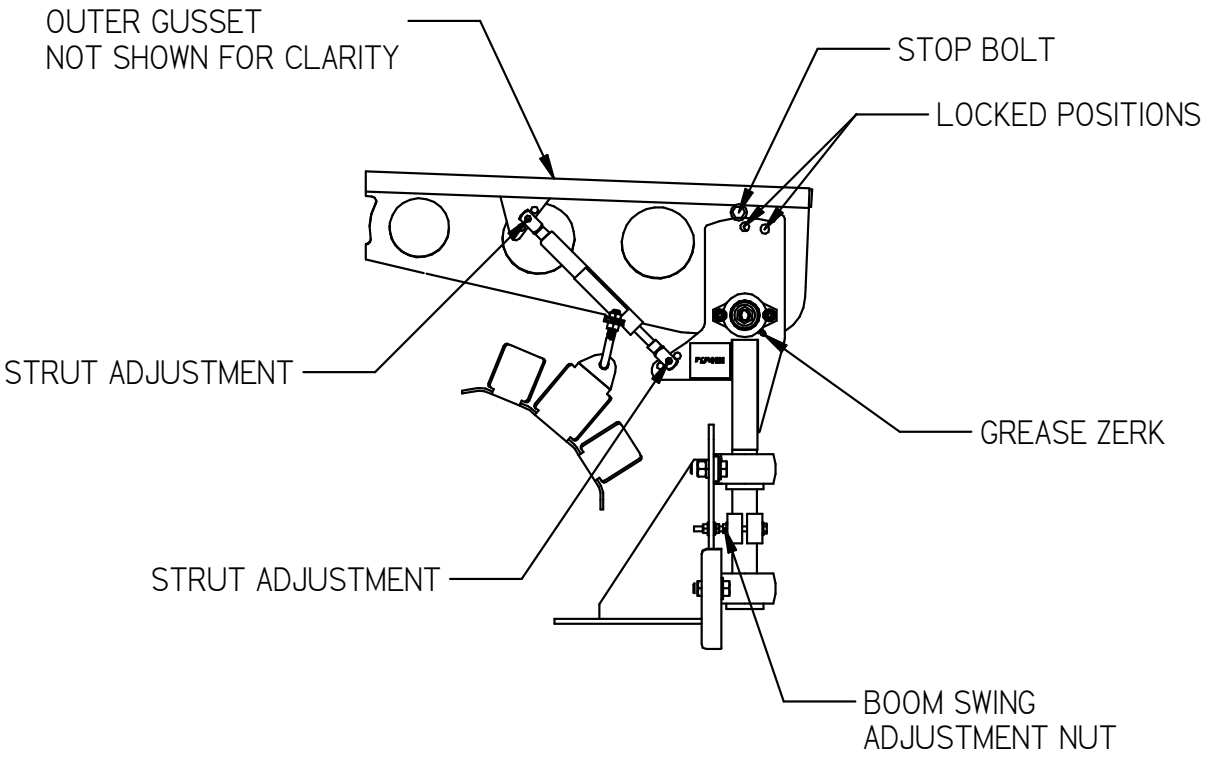


**Fig. 6-17 Flex Boom Adjustment**

#### 6.21.1 Strut Adjustment

1. Remove the hose from both hose hangers and hose hook to lessen the weight on the boom. Remove the stop bolt hardware, rotate the boom up to allow access to the strut. The strut pin is removed by unclipping the clamp at the base of each end of the strut and then pulling the pin out (the clamp is attached to the pin).
2. The factory set position on the strut is center hole on both ends of the strut. If you desire less force lifting of the flex boom arm, you can move both ends of the strut to the upper position. If you desire more force lifting the flex boom arm, you can move both ends of the strut to the lower position.

#### 6.21.2 Locked Position of the Flex Boom

1. If the strut wears out to the point that the strut no longer lifts the boom, you can move the hardware in the stop bolt position to one of the two locked positions (different boom height) to allow the crew to continue to work until a new strut can be installed.

©2026 by Crafco All Rights Reserved

### 6.21.3 Grease Zerk

1. For each of the two Flex Boom bearings there is a grease zerk, see maintenance chart for timetable for greasing these bearings.

### 6.21.4 Boom Swing Adjustment Nut

1. The tension on the boom brake can be adjusted, this will control the side-to-side swing of the Flex Boom. Tighten both nuts to increase the tension and slow the movement, loosen both nuts to decrease the tension and speed up the movement.

©2026 by Crafco All Rights Reserved

### 6.22 Wand Repair Instructions

The following sections will address how to replace the wand handle, wand cable, switch, and terminal block of the 52200 wand assembly. Actuator, actuator lock, and spring can also be replaced. See Fig. 9-27 Wand Assembly: PN 52200 All Models for parts breakdown.

#### 6.22.1 Cable Replacement

1. Disconnect the cable from the electric hose. Lay wand on flat surface with socket head screws facing up.
2. Remove (7) #10-32 x 1” socket head screws and (2) 1/4-20 x 1/2” socket head screws.
3. Carefully remove top handle half. **Caution:** Actuator pin may lift actuator and spring from bottom handle half. Do not lose spring or pin.
4. Remove red and orange wire from switch.
5. Remove green, white, and black wires from terminal block.
6. Remove cable from handle.
7. Replace cable in handle. Note: Look for flats on strain relief of cable that correspond to flats on handle.
8. Install red wire on top of switch (see Fig. 6-18 Switch Wire Location), then install orange wire on (NO) terminal (top rear of switch).
9. Strip green, white, and black wires 3/8” and twist wires strands then install (**Note:** white black wire is routed under switch see Fig.6-19 Wire Routing) on open terminals of terminal block. Make sure to install completely under the clamp before tightening screws. Torque screws to 16 in-lbs. Bend all (3) wires over the top of terminal block (see Fig.6-20 Terminal Block Wiring).
10. Replace top wand handle half.
11. Use blue Loctite® on all external handle screws before installation. Install (7) #10-32 x 1” socket head screws hand tight, then install (2) 1/4-20 x 1/2” socket head screws hand tight. Now torque all #10-32 screws to 12 in-lbs. and all 1/4-20 screws to 25 in-lbs.
12. Reconnect cable to electric hose.

#### 6.22.2 Switch Replacement

1. Follow steps 1-4 from 6.22.1 above.
2. Remove (2) #4-40 x 1/2” pan head screws from switch, then remove switch from handle.
3. See Fig.6-21 Actuator Spring Location and Fig.6-22 Actuator / Trigger Assembly for proper assembly of actuator to switch.
4. Replace switch and install (2) #4-40 x 1/2” screws and tighten.
5. Follow Steps 10-12 from 6.22.1 above.

#### 6.22.3 Terminal Block Replacement

1. Follow steps 1-4 from 6.22.1 above.
2. Remove (2) #10-32 x 5/8” round head machine screw from terminal block then remove terminal block from handle.
3. Replace terminal block and install (2) #10-32 x 5/8” screws and tighten.
4. Follow steps 10-12 from 6.22.1 above. If actuator, pin, and spring need to be reinstalled, see Fig.6-21 Actuator Spring Location and Fig.6-22 Actuator / Trigger Assembly.

©2026 by Crafco All Rights Reserved

### 6.22.4 Wand Handle Replacement

1. Follow steps 1-6 from 6.22.1 above.
2. Remove actuator, actuator lock, pin, and spring.
3. Remove (2) #4-40 x 1/2” pan head screws from switch, then remove switch from handle.
4. Remove (2) #10-32 x 5/8” round head machine screw from terminal block then remove terminal block from handle.
5. Flip wand over and remove the remaining (2) 1/4-20 x 1/2” screws from the handle. Remove handle from wand tube.
6. Install new handle by reversing previous steps.

**Fig. 6-18 Switch Wire Location**

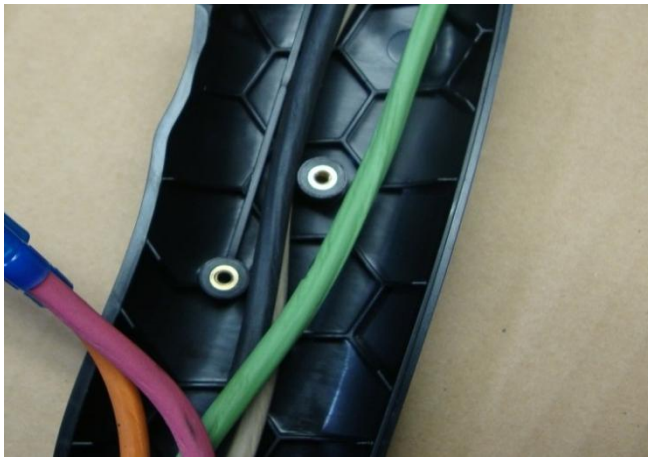

**Fig.6-19 Wire Routing**

©2026 by Crafco All Rights Reserved

Fig.6-20 Terminal Block Wiring

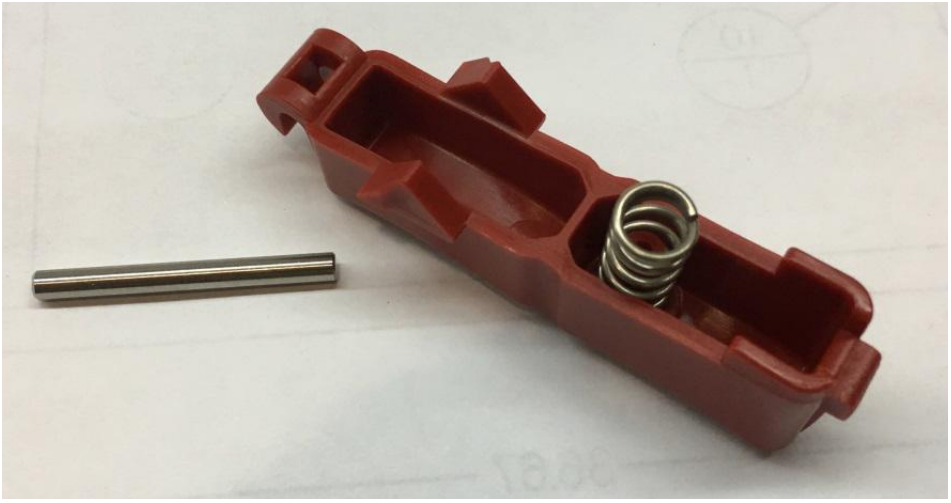

Fig.6-21 Actuator Spring Location

©2026 by Crafco All Rights Reserved

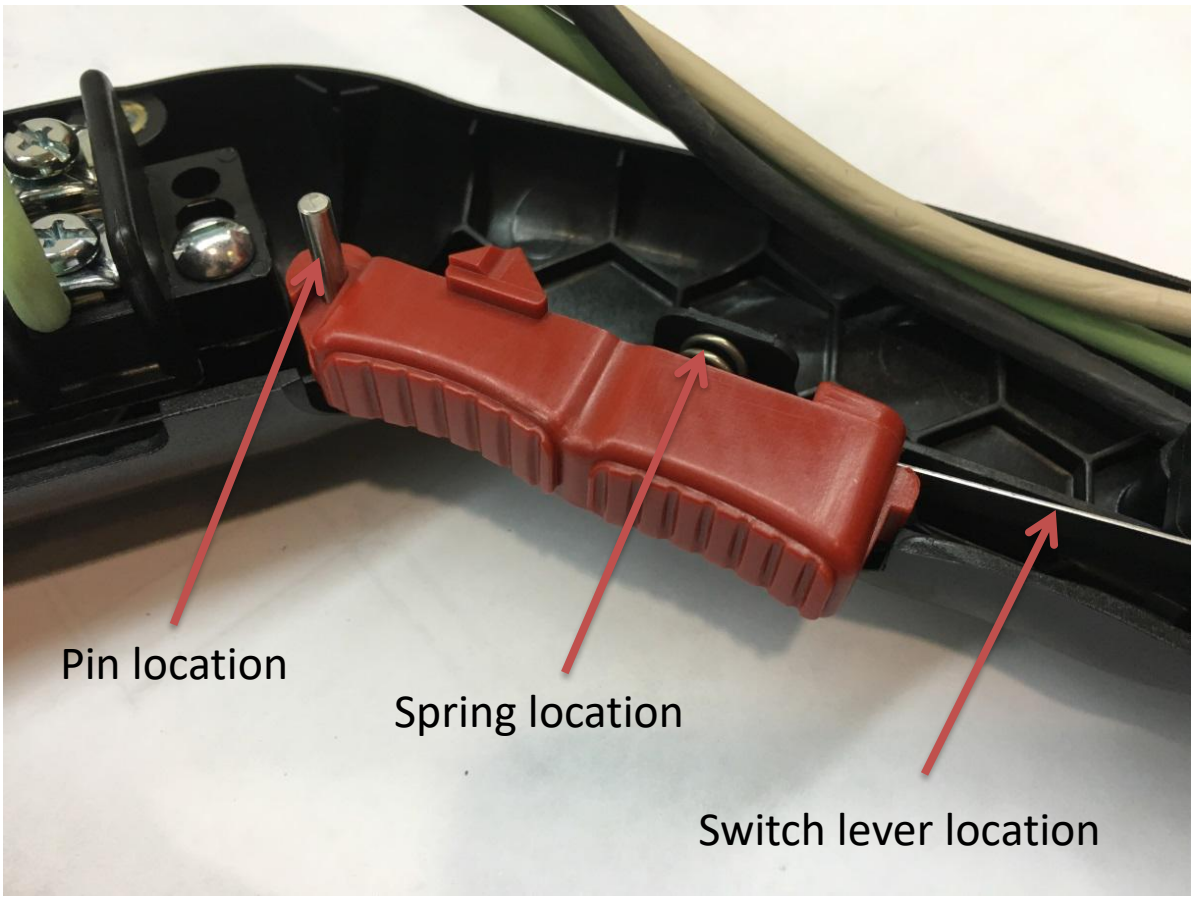


**Fig.6-22 Actuator / Trigger Assembly**

©2026 by Crafco All Rights Reserved

### 6.23 Burner Fuel Filter Replacement

For machines that have a separate fuel filter for the burner, follow the steps below to replace the fuel filter.

**Table 6-22 Burner Fuel Filter Replacement**

| Step | Action |
|---|---|
| 1 | The machine should be off and cooled to ambient temperature. |
| 2 | Place a drain pan below the burner fuel filter assembly. |
| 3 | Close the ball valve that is located inline before the burner fuel filter assembly. |
| 4 | Unscrew the filter from the assembly using an oil filter or strap style wrench. |
| 5 | Screw the new filter into place and tighten by hand. |
| 6 | Open the ball valve to allow fuel to flow. |
| 7 | Turn on the power key and turn on the main power switch. The burner should self-prime and start. It may take a couple cycles to fill the new fuel filter and bleed the fuel system. |
| 8 | Once the burner is running, check for any fuel leaks and tighten the filter if needed. |
| 9 | Turn off the main power switch and power key. |

©2026 by Crafco All Rights Reserved

# Chapter 7 How to Use a Multimeter

## 7.0 How to Use a Multimeter

Melters use 12-volt direct current (DC) to power the burner, hydraulic valves, and trigger on electric wand. The DC power is from a 12-volt battery.
The electric hose and wand use 24-volt 3-phase alternating current (AC). The AC power is from the generator which hangs under the radiator. This system has no reference to ground so there is no possibility of electrical shock unless you are between 2 of the phases. NOTE: ONLY CHECK AMPERAGE ON A HOSE WITH A CLAMP-ON AMP METER. (See Fig. 7-2 Clamp – On Amp Meter/Multimeter)

12-volt DC power has little danger of electrical shock. Care must still be taken when dealing with a DC power system because it is capable of producing large amounts of current.

## 7.1 Checking DC Voltage with a Multimeter

Connect the probes to the meter.
Set the range to a position that includes 12-volts or higher.
Touch the red probe to the positive side of accessory and black probe to ground. If the item you are checking has a ground wire attached then use that ground or you can use a non-painted surface on the frame.

## 7.2 Checking AC Voltage with Multimeter

Connect the probes to the meter (See Fig. 7-1 Standard Multimeter).
Set range to a position that includes 24-volts or higher.
There are three steps to test the generator voltage. All 3 values should be in the range of 24-30 volts AC.

- Touch red probe to the white wire of the generator and the black probe to the green wire of the generator.
- Next, move black probe to black wire.
- Then move red probe to green wire.

## 7.3 Checking Resistance (Ohms)

Connect probes to the meter (See Fig. 7-1 Standard Multimeter).
**Note:** When checking Ohms, the circuit cannot be completed. This means one end of the wire will need to be disconnected.

### 7.3.1 How to Check Wire Continuity

Set the meter to “Audible Continuity.”
Now touch the probe to each end of the wire in question. The meter will read less than “1.0” ohms on the screen and make an audible beep if the wire has continuity from end to end.

### 7.3.2 How to Check RTD Sensor

Set to dial Ohms Ω. If your meter has different ranges set to 2K or 2000-ohm range.
Touch one probe to each screw or wire of the sensor. The meter will read X.XX if in the 2K range or XXX.X if in the 2000 range.

©2026 by Crafco All Rights Reserved

# Chapter 7 How to Use a Multimeter

### 7.4 Checking Amperage

The Multimeter can be used to check amperages under 10 amps in AC or DC current.
When checking the amperage of the electric hose **always use a clamp-on amp meter**. (See Fig. 7-2 Clamp – On Amp Meter/Multimeter) The amperage in the hose can reach as high as 35 amps. Clamp the meter around one wire at a time. Remember, most clamp-on meters do not work on DC current.

**Fig. 7-1 Standard Multimeter**

# Chapter 7 How to Use a Multimeter

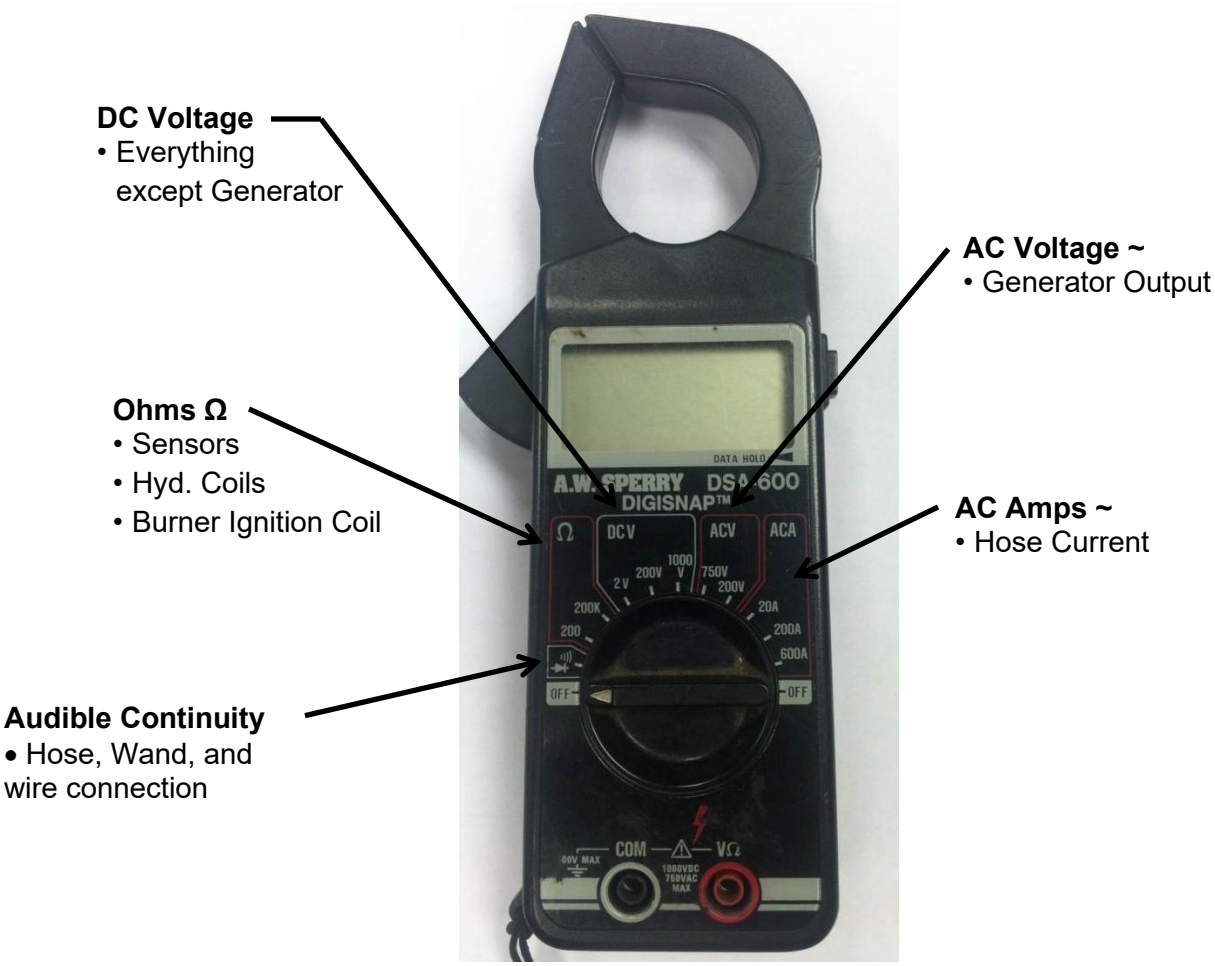


**Fig. 7-2 Clamp – On Amp Meter/Multimeter**

# Chapter 8 Troubleshooting (43600, 57200, and 43600DX)

## 8.0 Troubleshooting, All Models

## 8.1 Diesel Burner Troubleshooting

### 8.1.1 Symptoms: Burner will Not Ignite

**Table 8-1 Basic Visual Troubleshooting**

| Step | Possible Cause | If . . . |
|---|---|---|
| 1 | Start Troubleshooting at the control box. Is the diesel engine running? | • Yes, go to Step 2.<br>• No, start the diesel engine.<br>• **Note**: You can troubleshoot the burner without the engine running, but you must connect a battery charger to the battery and the ignition must be in the “ON” position. |
| 2 | Is the “MAIN POWER” toggle switch in the “ON” position? | • Yes, go to Step 3.<br>• No, turn the toggle switch to the “ON” position. |
| 3 | Is the “BURNER” toggle switch in the “ON” position? | • Yes, go to Step 4.<br>• No, turn the toggle switch to the “ON” position. |
| 4 | Are both the Material and Hot Oil temperature dials set to proper operating temperatures? | • Yes, go to Step 5.<br>• No, set the Material according to the type of sealant you are using and the Hot Oil 100°F above the Material set point. |
| 5 | Are both the Material and Hot Oil temperature displays reading a three-digit positive number? | • Yes, go to Step 6.<br>No, go to Table 8-3 Burner Electrical Troubleshooting, Step 2a. |
| 6 | Is the red "Burner" light "ON"? | • Yes, go to Step 7.<br>• No, go to Table 8-3 Burner Electrical Troubleshooting, Step 4. |
| 7 | Is the diesel tank full? | • Yes, go to Step 8.<br>• No, fill your tank or make sure you have enough fuel for the day. |
| 8 | Did you run the diesel tank low on fuel or empty? | • Yes, fill with diesel.<br>• No, go to Step 9. |

©2026 by Crafco All Rights Reserved

**Table 8-2 Basic Visual Troubleshooting (continued)**

| Step | Possible Cause | If . . . |
|---|---|---|
| 9 | Is there smoke coming out of the exhaust stack? | • Yes go to Table 8-6 Smoke Coming Out of Exhaust Stack.<br>• No, go to Step 9. |
| 10 | Is your burner working properly, but it seems like it takes a lot longer to reach operating temperature? | Yes, go to Table 8-11 Sealant is Heating Slowly.<br>• No, Call Crafco and speak to a customer service technician. |

### 8.1.2 Burner Electrical Troubleshooting

**Note**: Use Fig. 8-1 Diesel Burner Schematic while troubleshooting the burner electrical system.

**Table 8-3 Burner Electrical Troubleshooting**

| Step | Possible Cause | If . . . |
|---|---|---|
| 1 | Is there 12Vdc between the yellow and black wires at the burner plug? | • Yes, go to Step 4.<br>• No, go to Step 1a. |
| 1a | Is there 12Vdc between the yellow wire on the burner relay in the control box and the black wire on the relay? | • Yes, check for poor connection or broken wire between the burner relay in the control box and the plug on the burner.<br>• No, go to Step 1b. |
| 1b | Is there 12Vdc between WHT/RED wire on the burner relay in the control box and the black wire on the relay? | • Yes, go to Step 2.<br>• No, check for poor connection or broken wire between the burner relay in the control box and the burner reset switch. |
| 2 | Is there 12Vdc between the circuit breaker (red wire going to battery positive cable) and the ground lug on the battery tray? | • Yes, wait 15 seconds then repeat step 2.<br>• If still no voltage then replace circuit breaker.<br>• No, go to step 2a. |
| 2a | Check for loose or broken wires between circuit breaker and battery positive cable. | • Yes, replace or repair damaged wire and repeat Step 3.<br>• No, go to step 3. |

### Table 8-4 Burner Electrical Troubleshooting (continued)

| Step | Possible Cause | If . . . |
|---|---|---|
| 3 | Is there 12Vdc between the positive and negative battery post? If this check is done while the engine is running the reading should be 13.8 volts. | • Yes, then there should be 12Vdc on the battery side of the circuit breaker.<br>• No, replace battery.<br>• **Note**: If the reading is less than 13.8 volts while the engine is running the alternator needs to be rebuilt or replaced. |
| 4 | Is there 12Vdc between the green wire in the burner plug and the black wire in the burner plug? | • Yes, go to Table 8-8 Testing the DC Controller.<br>• No, go to Step 4a. |
| 4a | Is there 12Vdc between green wire labeled “GRN-CH1-S” on hot oil PAKSTAT and nearby ground source (black wire)? | • Yes, check for loose or broken wires between burner plug and PAKSTAT.<br>• No, go to Step 5. |
| 5 | Is there 12Vdc between gray wire labeled “GRY-1” on hot oil PAKSTAT and terminal #5 black wire of the oil PAKSTAT | • Yes, replace hot oil PAKSTAT.<br>• No, go to Step 5a. |
| 5a | Is there 12Vdc between the gray wire on the material PAKSTAT and terminal #8 black wire of the material PAKSTAT | • Yes, check for loose or broken wires between hot oil PAKSTAT and the material PAKSTAT.<br>• No, go to Step 6a. |
| 6a | Is there 12Vdc between terminal #3 orange wire and terminal #8 black wire of the material PAKSTAT? | • Yes, replace PAKSTAT.<br>• No, go to Step 6b. |
| 6b | Is there 12Vdc between terminal #1 orange wire and terminal #8 black wire of the material PAKSTAT? | • Yes, check for loose or broken wires between terminal #1 and #3 of material PAKSTAT.<br>• No, go to Step 6c. |
| 6c | Is there 12Vdc between terminal #9 orange wire and terminal #8 black wire of the material PAKSTAT? | • Yes, check for loose or broken wires between terminal #9 and #1 of material PAKSTAT.<br>• No, go to Step 7. |
| 7 | Is there 12Vdc between terminal #3 orange wire and terminal #5 black wire on hot oil PAKSTAT? | • Yes, check for loose or broken wires between terminal #3 of the hot oil PAKSTAT and terminal block.<br>• No, go to Step 8. |

### Table 8-5 Burner Electrical Troubleshooting (continued)

| Step | Possible Cause | If . . . |
|---|---|---|
| 8 | Is there 12Vdc between bottom terminal (orange wire) of burner ON/OFF toggle switch and nearby ground source (black wire)? | • Yes, check for loose or broken wires between top terminal power switch and terminal #3 of the hot oil PAKSTAT.<br>• No, go to Step 9. |
| 9 | Is there 12Vdc between middle terminal (red wire) of burner ON/OFF toggle switch and nearby ground source (black wire)? | • Yes, replace switch.<br>• No, go to Step 10. |
| 10 | Is there 12Vdc between the “Main Power Switch” (red-2 wire) and nearby ground source (black wire)? | • Yes, check for loose or broken wires between those two points.<br>• No, go to Step 11. |
| 11 | Is there 12Vdc between the “Main Power Switch” (red-3 wire) and nearby ground source (black wire)? | • Yes, replace contact block.<br>• No, go to Step 12. |
| 12 | Is there 12Vdc between top terminal of circuit breaker (red wire) and nearby ground source (black wire)? | • Yes, check for loose or broken wires between top terminal of circuit breaker and bottom terminal (red wire) of power switch.<br>• No, go to Step 12a. |
| 12a | Is there 12Vdc between bottom terminal of circuit breaker (red wire) and nearby ground source (black wire)? | • Yes, replace circuit breaker.<br>• No, go to Step 13. |
| 13 | Is there 12Vdc between the red wire on top-left terminal of ignition switch and nearby ground source (black wire)? | • Yes, check for loose or broken wires between of ignition switch and bottom terminal of circuit breaker.<br>• No, go to Step 13a. |
| 13a | Is there 12Vdc between red wire on both red wires on the crank lockout relay in the control box (left relay next to the burner relay) and nearby ground source (black wire)? | • Yes, power on one red wire only, replace the crank lockout relay.<br>• No power on either red wire on the crank lockout relay, go to Step 14. |
| 14 | Is there 12Vdc between blue wire on starter solenoid and nearby ground source (black wire or bare metal on engine case)? | • Yes, check for loose or broken wire between starter solenoid and ignition switch.<br>• No, go to step 15. |
| 14a | Check connections and condition of red battery cable. | • Yes, there should be 12Vdc at all previous steps.<br>• No, replace battery cable. |

# Chapter 8 Troubleshooting (43600, 57200, and 43600DX)

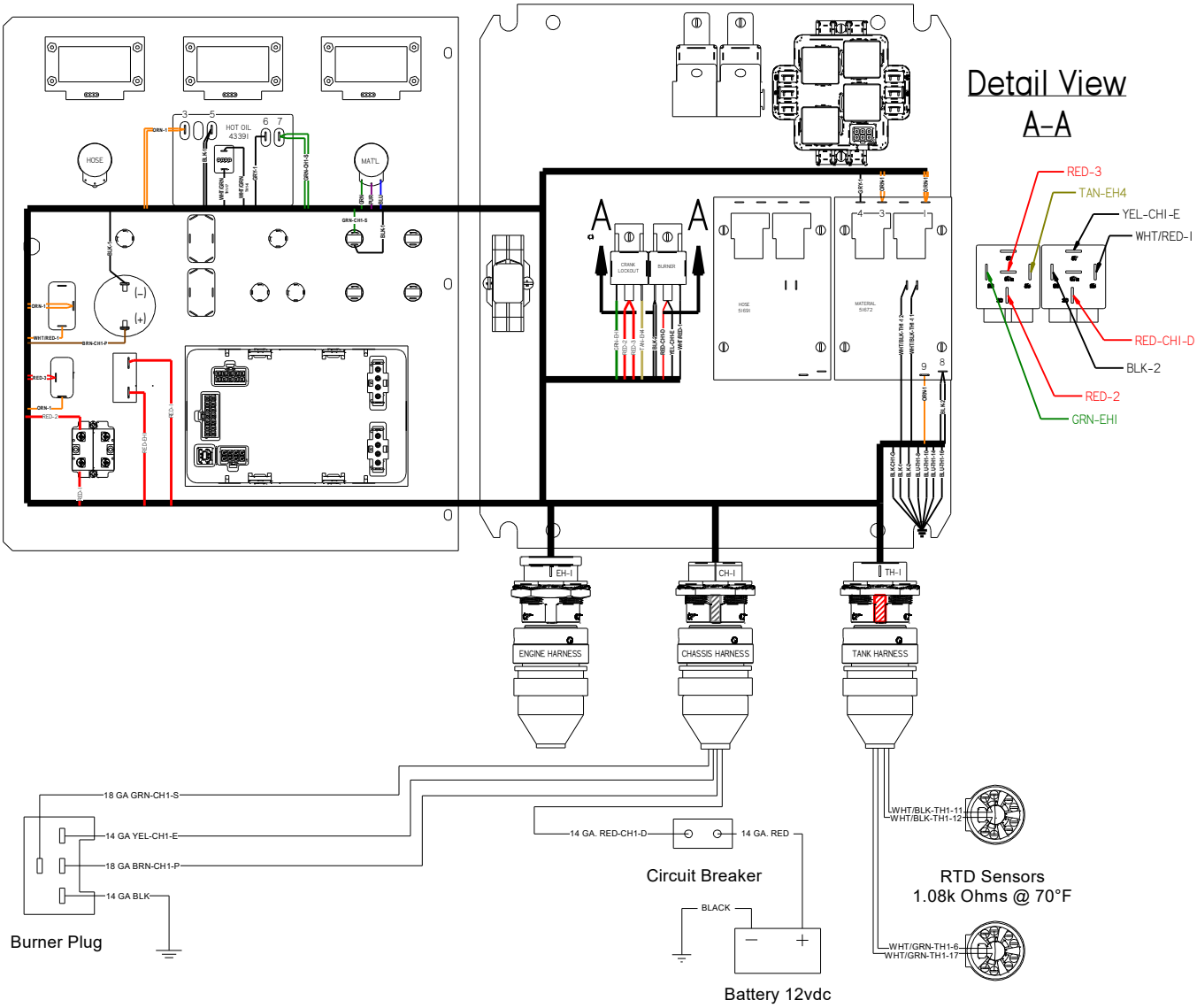


**Fig. 8-1 Diesel Burner Schematic**

### 8.1.3 Excessive Smoke Coming Out of Exhaust Stack

**Table 8-6 Smoke Coming Out of Exhaust Stack**

| Step | Smoke Coming Out of the Exhaust Stack |
|---|---|
| 1 | White smoke indicates that there is too much air being forced though the burner. Loosen the Air Shutter screw and rotate the Air Shutter counterclockwise to reduce air. Refer to Fig. 8-3 Diesel Burner Air Settings |
| 2 | Black smoke indicates that there is not enough air being forced through the burner. First check the air settings, if more air is required rotate Air Shutter clockwise. Refer to Fig. 8-3 Diesel Burner Air Settings |
| 3 | Refer to Fig. 8-3 Diesel Burner Air Settings to locate the following components. Using a 7/16" wrench, remove the copper fuel line nut attached to the nozzle line. Next remove the locking nut for the nozzle tube. Then loosen the locking tabs on the ignition coil and open the ignition coil. Remove the nozzle line assembly. |
| 4 | Using Fig. 8-2 Diesel Burner Electrode Adjustment, make sure the electrodes are in the correct position. Loosen the clamp holding the electrodes in place so they can be adjusted. Inspect the porcelain ceramic insulator for any cracks. Also check the tip of each of the electrodes to make sure they still have a sharp point and are not rounded off. |
| 5 | If it has been longer than 500 hours since the last time the burner nozzle was replaced, Crafco recommends replacing the burner nozzle at this time. |
| 6 | Reassemble the burner, using the reverse order in Step 3. |
| 7 | Remove the burner box assembly by removing the four (4) 1/2" bolts, flat washer, lock washer, and nuts holding the burner box onto the trailer. |
| 7a | Make sure the insulation inside the burner box is not soaked with diesel fuel. |
| 7b | If the insulation is soaked with diesel fuel, you will need to replace the insulation. |
| 7c | Reassemble the burner box. |

### 8.1.4 Burner Lights but Shuts Down After 15 Seconds

**Table 8-7 Burner Lights but Shuts Down After 15 Seconds**

| Step | Possible Cause | If . . . |
|---|---|---|
| 1 | Does the CAD EYE have soot or dirt on the lens? | • Yes, clean cad eye lens with a soft cloth.<br>• No, go to Step 2. |
| 2 | Are the two yellow wires for the CAD EYE loose or broken? | • Yes, repair or replace as needed.<br>• No, go to Step 3. |
| 3 | Is the CAD EYE faulty? | • Yes, replace CAD EYE.<br>• No, call a Crafco service technician. |

### 8.1.5 Testing DC Controller

**Table 8-8 Testing the DC Controller**

| Step | Bench Test DC Controller |
|---|---|
| 1 | Remove all wire nuts attaching the DC Controller to the burner. |
| 2 | Attach the black ground wire to the negative battery post. |
| 3 | Attach the red wire to the positive battery post. |
| 4 | Attach the white (Enable) wire to the positive battery post to start the test. (Genesis II Controllers will have a 15-second delay.)<br>• Orange (Blower Motor) wire should have 12Vdc (all the time).<br>• Blue (Igniter) wire should have 12Vdc. |
| 5 | Twist the yellow wires together (once voltage registers) on the orange, blue and purple wires.<br>• Orange (Blower Motor) wire should maintain 12Vdc.<br>• Blue (Igniter) wire should lose voltage after 15 seconds.<br>• Purple (Valve) wire should maintain 12Vdc. |
| 6 | If any of the above tests fail, replace the DC Controller. |

### 8.1.6 Burner Fuel Solenoid Testing

**Table 8-9 Burner Fuel Solenoid Test**

| Step | Fuel Solenoid Test |
|---|---|
| 1 | Remove cord set from fuel solenoid. |
| 2 | Check the ohms between the terminals of fuel solenoid. |
| 3 | If the reading is between 15-25 ohms the coil is good. |
| 4 | If the reading is outside the above range or the meter indicates an open circuit, replace the fuel solenoid. |

### 8.1.7 Burner Ignition Coil Testing

**Table 8-10 Burner Ignition Coil Test**

| Step | Ignition Coil Test |
|---|---|
| 1 | Make sure the burner is off. Open the ignition transformer (located above the blower) to expose the springs. |
| 2 | Check resistance between each of the springs and the ground (exposed metal on the burner). |
| 3 | The meter should read less than 2000 ohms. (Take note of the readings, you will use them in Step 5.) |
| 4 | Check resistance between both springs. (Take note of the reading, you will use it in Step 5.) |
| 5 | The igniter should be replaced if:<br>• The difference between the two springs to ground resistance readings is greater than 20%.<br>• Or the spring-to-spring resistance does not read approximately twice the spring to ground. |

### 8.1.8 Bleeding the Burner

All Models, the fuel line to the burner is plumbed to have the burner be self-priming. Ensure the “Main Power” and “Burner” switch is “ON” and burner fuel pump will start circulating fuel through the fuel lines, which removes all air bubbles automatically, since it has a return line to the fuel tank.

# Chapter 8 Troubleshooting (43600, 57200, and 43600DX)

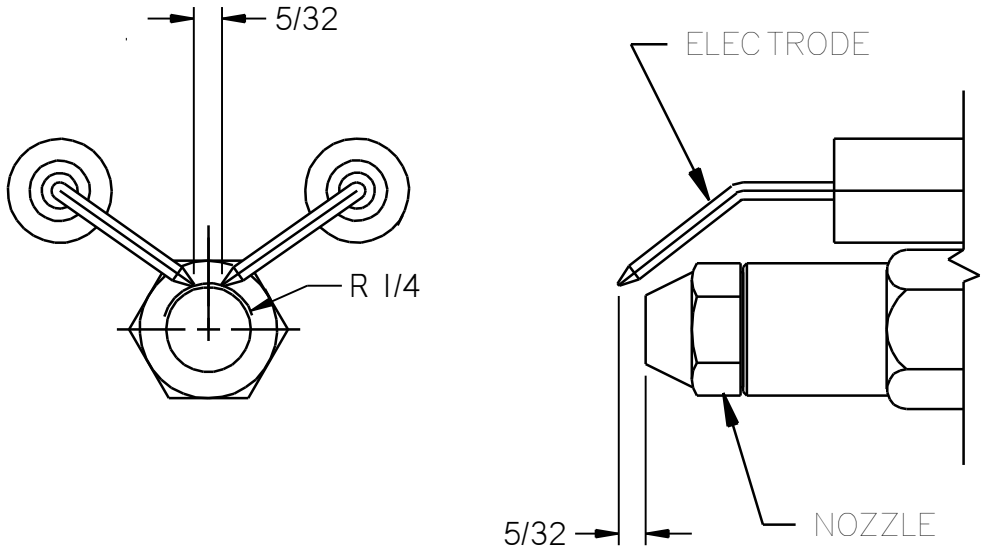


**Fig. 8-2 Diesel Burner Electrode Adjustment**

Air Shutter = 7
Air Band = 0
Fuel Pressure = 140 PSI
Adjustment Plate = 3

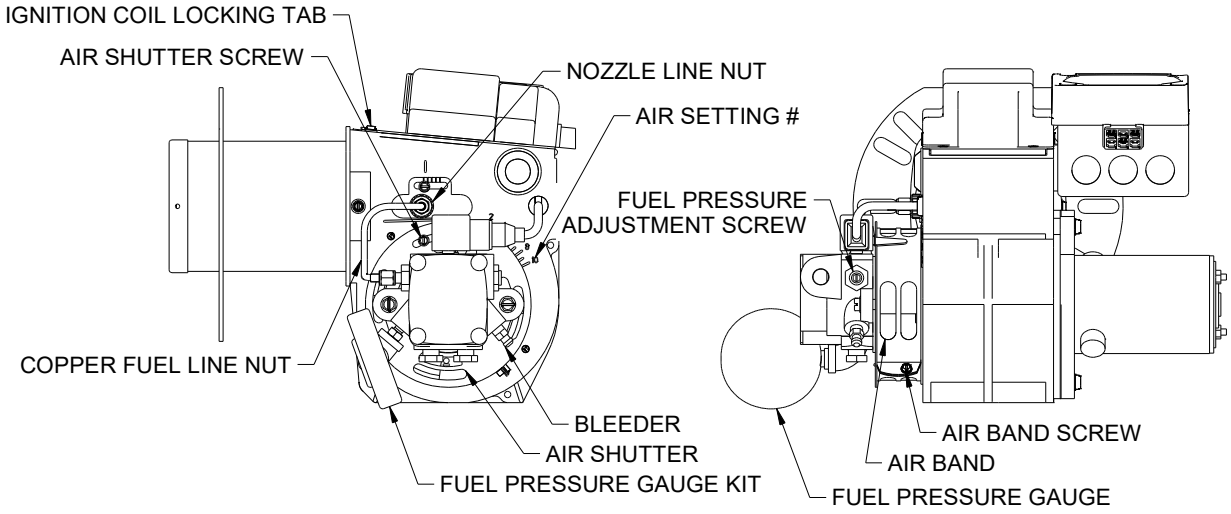


**Fig. 8-3 Diesel Burner Air Settings**

### 8.1.9 Sealant is Heating Slowly

**Table 8-11 Sealant is Heating Slowly**

| Step | Sealant is Heating Slowly |
|---|---|
| 1 | With the material level half or less, open the loading lid and inspect the inside edge of the material tank. Check if there is a buildup of old, dried out and hardened material along the top half of the material tank. |
| 2 | If this is the case you will need to drain out (use up) the rest of the material inside the tank. When the tank is empty, use an air chisel to remove this built up material. Remove as much as possible all around the tank, including the roof of the material tank. Remove all the old sealant chunks from the bottom of the material tank. This should be done every year or as conditions require. |
| 3 | Check your level of the heat transfer oil, the mark on the dipstick is for 70°F. |
| 4 | Check your records of the last service replacement of the heat transfer oil. If it has been longer than 500 hours, or one year, you need to change your oil. |
| 5 | Many Crafco service centers can perform these service steps for you if you cannot. Call your local service center to find out if they can. |

## 8.2 Mixer Troubleshooting

### 8.2.1 Symptom: Mixer Does Not Rotate

**Table 8-12 Basic Visual Troubleshooting**

| Step | Possible Cause | If . . . |
|---|---|---|
| 1 | Is the Material Temperature Display at or above 275°F? | • Yes, go to Step 2.<br>• No, continue to allow the machine to heat. (Make sure the Material dial and the Hot Oil dial are set at operating temperatures.) |
| 2 | Is the red "Mixer" light "ON"? | • Yes, go to Step 3.<br>• No, go to Table 8-13 Mixer Electrical Troubleshooting |
| 3 | Is the loading door closed? | • Yes, go to Step 4.<br>• No, shut the loading door. |
| 4 | Is the "Mixer" toggle switch in the "Forward" position? | • Yes, go to Step 5.<br>• No, move the toggle switch to the forward position. |
| 5 | Move the "Mixer" toggle switch to the “Reverse” position.<br>Is the agitator moving? | • Yes, allow mixer to reverse for 15 seconds and then move the "Mixer" toggle switch to the "Forward" position. Go to Step 6.<br>• No, go to Table 8-13 Mixer Electrical Troubleshooting |
| 6 | Open the Material loading door. Are there several un-melted blocks in the tank? | • Yes, this may cause the agitator to jam. Use the mixer toggle switch to move the agitator forward and backward until the material melts enough to allow forward movement without jamming. Crafco recommends you add one to two blocks every three to four minutes during dispensing of product.<br>• No, go to Table 8-13 Mixer Electrical Troubleshooting |
| 7 | Is the hydraulic fluid level near the center of the sight gauge? Check at ambient temperature. See Fig. 5-1 Hydraulic Fluid Level and Temp. Gauge | • Yes, go to Table 8-13 Mixer Electrical Troubleshooting<br>• No, fill oil to the center of the sight gauge. |

### 8.2.2 Mixer Electrical Troubleshooting

**Note**: Use Fig. 8-5 Mixer Schematic while troubleshooting the mixer electrical system.

**Table 8-13 Mixer Electrical Troubleshooting**

| Step | Possible Cause | If . . . |
|---|---|---|
| 1 | Is the amber light "ON" on the Din Plug when the "Mixer" toggle switch is in the "Forward" position? (For forward din plug location. Refer to Fig. 8-7 Din Plug Layout). | • Yes, then the mixer should be working. If it is not working see Table 8-15 Mixer Hydraulic Troubleshooting<br>• No, go to Step 1a. |
| 1a | Unscrew the din plug center screw so you can pull the din plug up about 1/4" in order to check for voltage.<br>Is there 12Vdc from side post to side post? | • Yes, the electrical system for the agitator is working properly; go to Table 8-15 Mixer Hydraulic Troubleshooting. Also replace din plug at earliest convenience to retain visual troubleshooting ability.<br>• No, go to Step 2. |
| 2 | Is there 12Vdc between the "Mixer" toggle switch bottom post BRN-TH1-15 wire and nearby ground wire (lower right-hand corner of the control box back panel)? (With the "Mixer" toggle switch in the "Forward" position.) See Fig. 8-7 Din Plug Layout. | • Yes, replace din plug.<br>• No, go to Step 2a. |
| 2a | Is there 12Vdc between the "Mixer" toggle switch center post RED/WHT-TH1-26 wire and nearby ground source (blue wires)? | • Yes, replace mixer toggle switch<br>• No, go to Step 3. |
| 3 | Is there 12Vdc between the lid switch RED/WHT-TH1-26 wire and a nearby ground source?<br>(Check both RED/WHT-TH1-26 and RED-TH1-21 wires on the bottom of the lid switch with the lid closed.) | • Yes, on both red wires check for loose connections or broken wires between lid switch and mixer toggle switch.<br>• Yes, on only one red wire when the lid is closed. Readjust the lid switch so that the lid completely depresses the switch, and then recheck for 12Vdc. If the same result happens, replace the lid switch.<br>• No, go to Step 4. |

**Table 8-14 Mixer Electrical Troubleshooting (continued)**

| Step | Possible Cause | If . . . |
|---|---|---|
| 4 | Check for 12Vdc at red wire labeled RED TH1-21 and pink wire labeled PNK-1 on the Hose PAKSTAT terminal #9 and terminal #8 ground source (black wire)? | • Yes, on both, check for loose connections or broken wires between lid switch and hose board.<br>• No, go to Step 4a. |
| 4a | Is there 12Vdc between the Material PAKSTAT terminal #2 pink wire labeled PNK-1 and terminal #8 black ground wire?<br>(Refer to Fig. 8-5 Mixer Schematic.) | • Yes, check for loose connections or broken wires between material PAKSTAT terminal #2 and hose PAKSTAT terminal #9.<br>• No, go to Step 4b. |
| 4b | Is there 12Vdc between the Material PAKSTAT terminal #1 orange wire labeled ORN-1 and terminal #8 black ground wire? | • Yes, replace the Material PAKSTAT.<br>• No, if this is the case then the diesel burner will not be working properly. Recheck the list of steps above or contact a Crafco customer service technician for help. |

Fig. 8-4 Checking Din Plug Voltage

# Chapter 8 Troubleshooting (43600, 57200, and 43600DX)

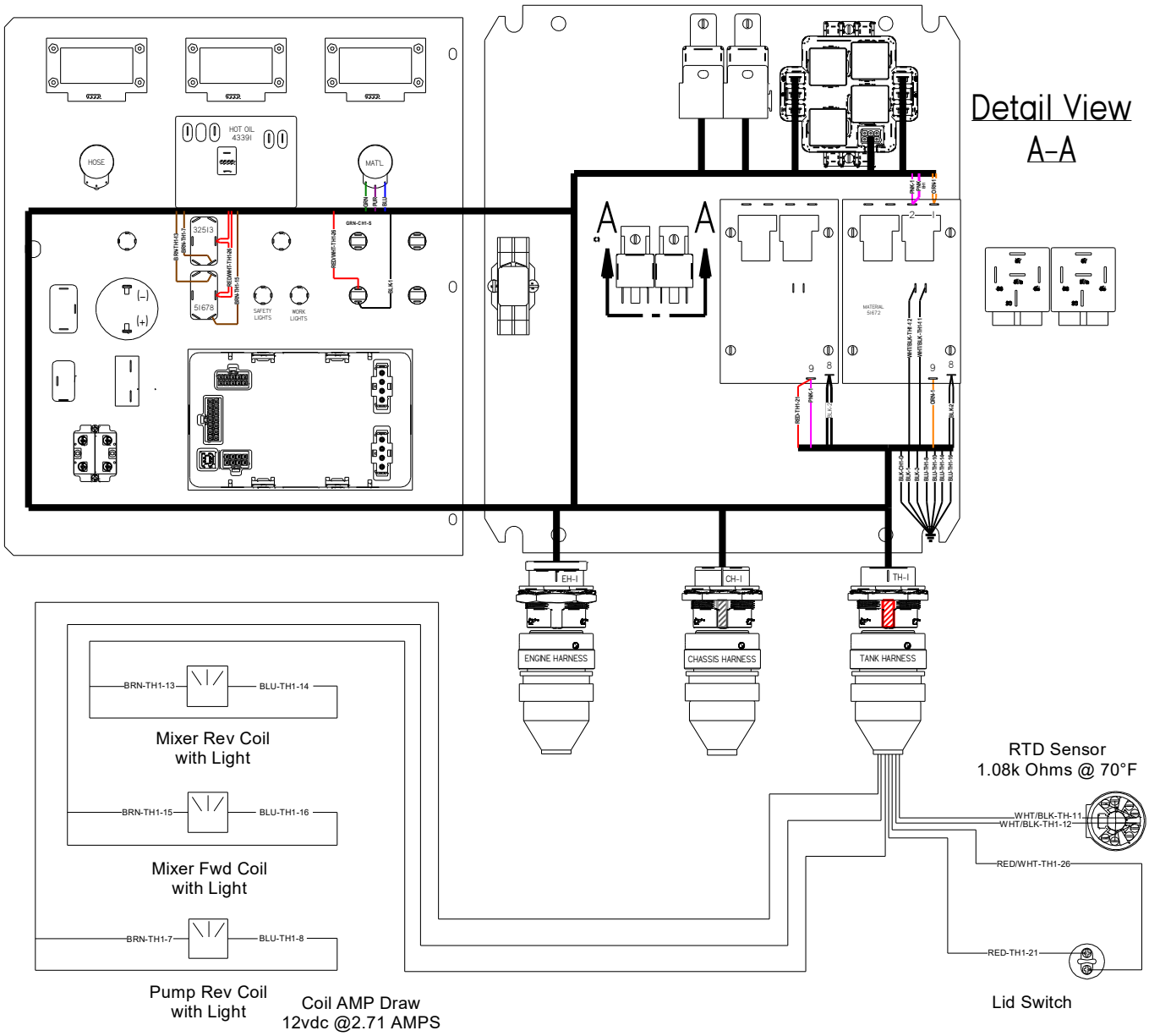


**Fig. 8-5 Mixer Schematic**

### 8.2.3 Mixer Hydraulic Troubleshooting

**Table 8-15 Mixer Hydraulic Troubleshooting**

| Step | Possible Cause | If . . . |
|---|---|---|
| 1 | Remove the din plug, then remove the coil by unscrewing the nut on top of the coil. With the coil removed, re-attach the din plug and energize the coil by moving the mixer switch to Forward or Reverse, then insert a screwdriver into the center of the coil. Does the coil magnetize when the din plug amber light is "ON"? | • Yes, go to Step 2.<br>• No, replace the coil. |
| 2 | Is the relief pressure set correctly?<br><br>(Refer to Fig. 8-6 Hydraulic Valve Pressure Setting, for pressure settings.) | • Yes, go to Step 3.<br>• No, first turn "OFF" the diesel engine, then remove one of the two hydraulic hoses going to the agitator hydraulic motor, cap off the fitting on the motor and use a 3,000 PSI gauge with the proper JIC fitting, attach it to the hose. Start the diesel engine, turn "ON" the main power in the control box, move the "Mixer" toggle switch to the "Forward" position and read the pressure gauge. If the pressure needs to be adjusted use the pressure relief valve labeled "RVA", loosen the jam nut and adjust the pressure with the Allen screw at the end of the relief. Turn clockwise to increase pressure and counterclockwise to decrease pressure, and then tighten the jam nut to lock the pressure. Next turn "OFF" the diesel engine, remove the cap and pressure gauge, then re-attach the hose. |
| 3 | Is the hydraulic flow 1.5 GPM from the hydraulic valve? If you do not have a flow meter, call a local hydraulic shop to run the test for you. | • Yes, call Crafco and speak to a customer service technician you should have been able to find the problem.<br>• No, replace the flow divider in the hydraulic valve. |
| 4 | Is the hydraulic flow correct from the hydraulic pump? If you do not have a flow meter, call a local hydraulic shop to run the test for you. (Refer to Fig. 8-6 Hydraulic Valve Pressure Setting for flow rate). | • Yes, call Crafco and speak to a customer service technician you should have been able to find the problem.<br>• No, replace the hydraulic pump. |

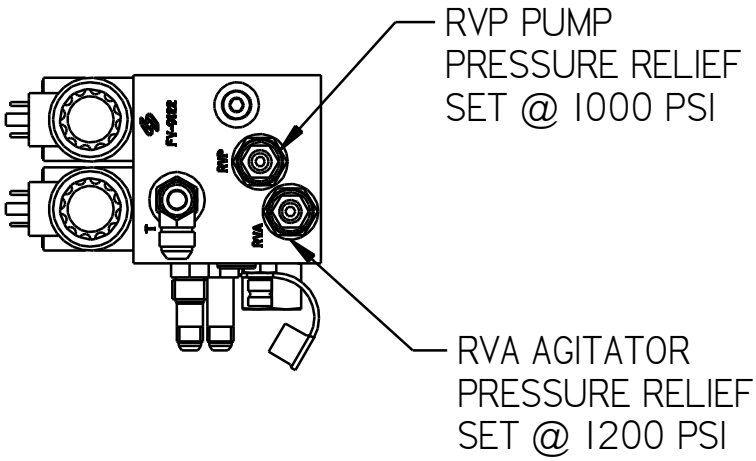


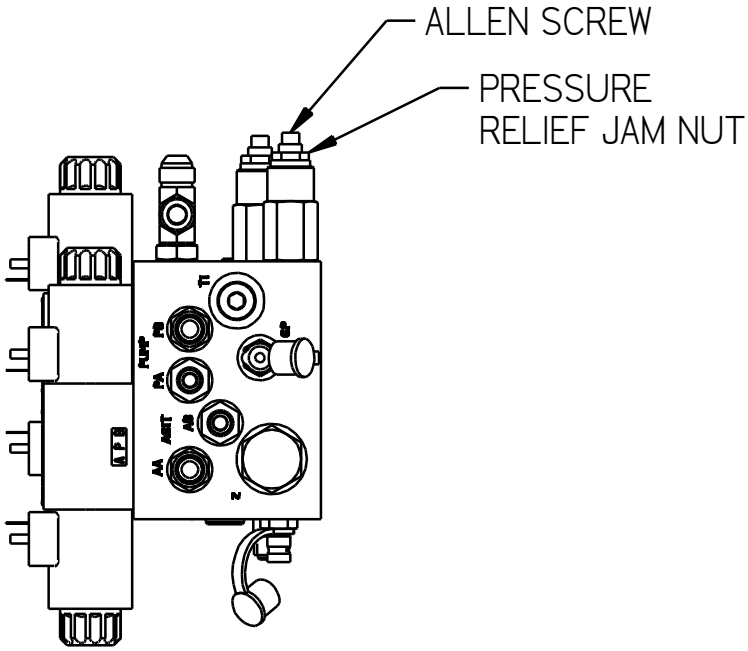


Agitation Direction = Counterclockwise
Material Pump = Clockwise
Hydraulic Flow Standard = 9.04 GPM @ 2400 RPM

**Fig. 8-6 Hydraulic Valve Pressure Setting**

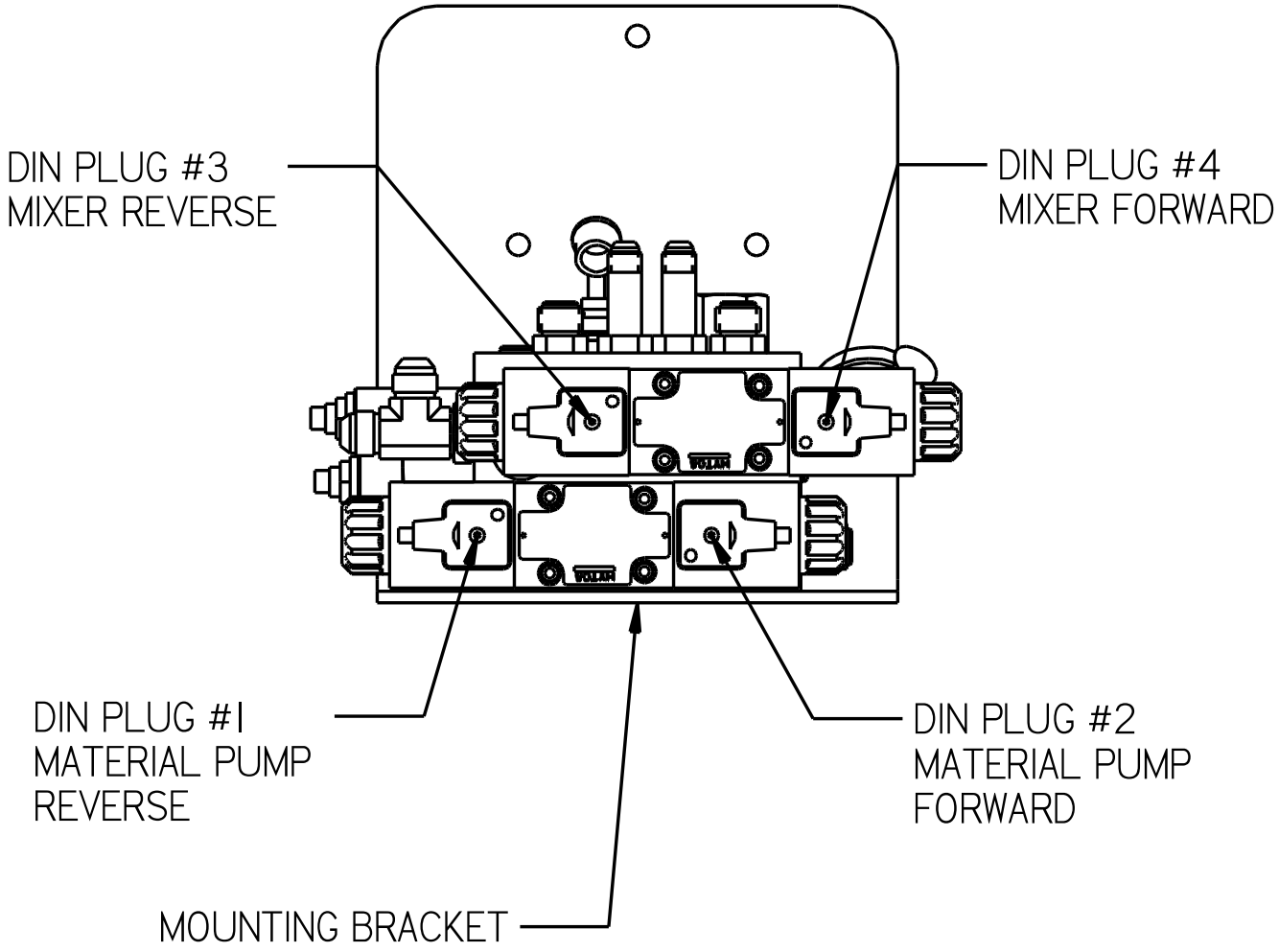


**Fig. 8-7 Din Plug Layout**

## 8.3 Hose Troubleshooting

### 8.3.1 Symptom: Hose Does Not Heat

**Table 8-16 Basic Visual Hose Troubleshooting**

| Step | Possible Cause | If . . . |
|---|---|---|
| 1 | Is the Material Temperature Display at or above 275°F? | • Yes, go to Step 2.<br>• No, continue to allow the machine to heat. (Make sure the Material dial and the Hot Oil dial are set at operating temperatures.) |
| 2 | Is the red "HEATED HOSE" light "ON"? | • Yes, go to Table 8-17 Hose Electrical Troubleshooting<br>• No, allow the machine to heat material to 275°F. |
| 2a | Is the circuit breaker tripped? | • Yes, reset the circuit breaker by pushing in the button which has popped out.<br>• No, go to Table 8-17 Hose Electrical Troubleshooting |

### 8.3.2 Hose Electrical Troubleshooting

**NOTE**: Use Fig. 8-9 Hose Circuit Schematic while troubleshooting the hose electrical system.

**Table 8-17 Hose Electrical Troubleshooting**

| Step | Possible Cause | If . . . |
|---|---|---|
| 1 | Is there 12Vdc between “BATT” terminal of the generator and a nearby ground source (lug on battery tray)? | • Yes, go to Step 2.<br>• No, go to Step 6. |
| 2 | Is there 24Vac between the white, green, and black wires?<br>**NOTE**: Do this test inside the junction box. Check between black and white, black and green, and green and white. See Fig. 8-8 Junction Box Voltage Testing. | • Yes, go to Step 3<br>• No, stop the engine, tighten the belt, restart engine and recheck output voltage.<br>• Still no, replace the generator. |
| 2a | Check the three heating element wires (blue) in the junction box for 30-35 Amps cold or 20-22 Amps hot.<br>**NOTE**: Always use a clamp-on amp meter to perform this test. Each wire should have the same amp reading (+/- 1 amp). | • Yes, the hose should be working properly.<br>• No, go to Step 3. |

### Table 8-18 Hose Electrical Troubleshooting (continued)

| Step | Possible Cause | If . . . |
|---|---|---|
| 3 | Check for continuity in the hose from end to end. Disconnect the three blue heating element wires (blue) from the terminal block inside the junction box and disconnect the five-pin plug between the hose and wand. Refer to Fig. 8-10 Junction Box Wiring.<br>**NOTE**: Check each letter "D", "E", and "A" with the three blue wires on the other end of the hose. There should only be continuity on one wire to each letter. | • Yes, go to Step 3a.<br>• No, either there was no continuity from one letter to the other end of the hose or there was more than one wire with continuity to a letter. This hose needs to be repaired or replaced. Contact Crafco to send back the hose for repair. |
| 3a | Check the RTD sensor in the hose against the readout in the control box. Disconnect the black and white wires from the terminal block in the junction box and test for ohms.<br>Refer to Table 8-20 RTD Sensor Ohms vs. Temperature | • Yes, the readout matches the table, go to Step 4.<br>• No, this hose needs to be repaired or replaced. Contact Crafco to send back the hose for repair. |
| 4 | Check for continuity in the wand between "D", "E", and "A".<br>**NOTE**: Check between "D" and "E", "D" and "A", and "A" and "E". | • Yes, go to Step 5.<br>• No, this wand needs to be repaired or replaced. Contact Crafco to send back the wand for repair. |
| 5 | Is there 12Vdc between Hose PAKSTAT blue wire terminal #4 and black wire terminal #8? | • Yes, check for loose or broken wire between terminal #4 and the "BATT" terminal on the generator.<br>• No, go to Step 6. |
| 6 | Is there 12Vdc between Hose PAKSTAT terminal #3 Pink wire and terminal #8 black wire? | • Yes, replace hose PAKSTAT.<br>• No, go to Step 7. |
| 7 | Is there 12Vdc between Hose PAKSTAT pink wire terminal #9 and black wire terminal #8? | • Yes, check for loose or broken wires between terminal #9 and terminal #3.<br>• No, go to Step 8. |
| 8 | Is there 12Vdc between Hose PAKSTAT pink wire terminal #1 and black wire terminal #8? | • Yes, check for loose or broken wire between terminal #9 and terminal #1.<br>• No if this is the case then the diesel burner will not be working properly. Recheck the list of steps above or contact a Crafco customer service technician for help. |

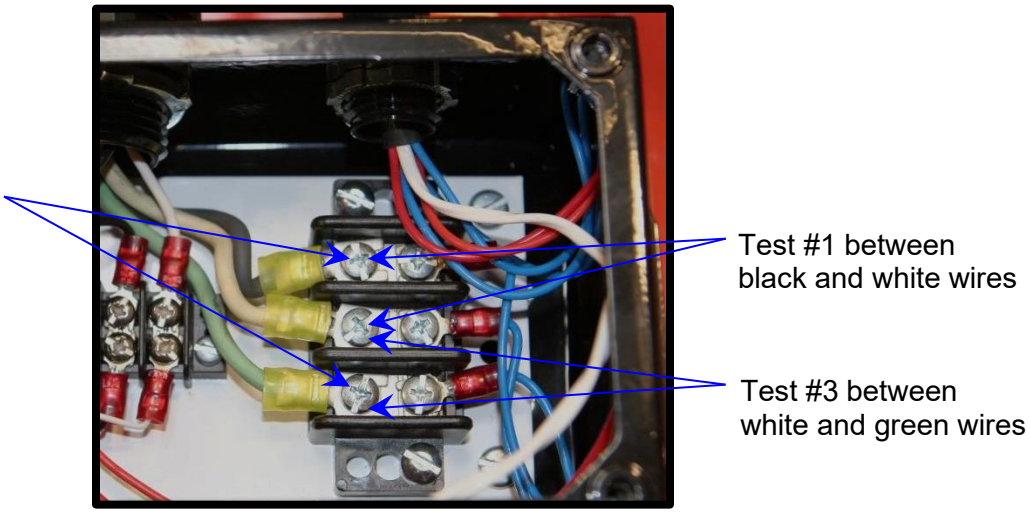


**Fig. 8-8 Junction Box Voltage Testing**

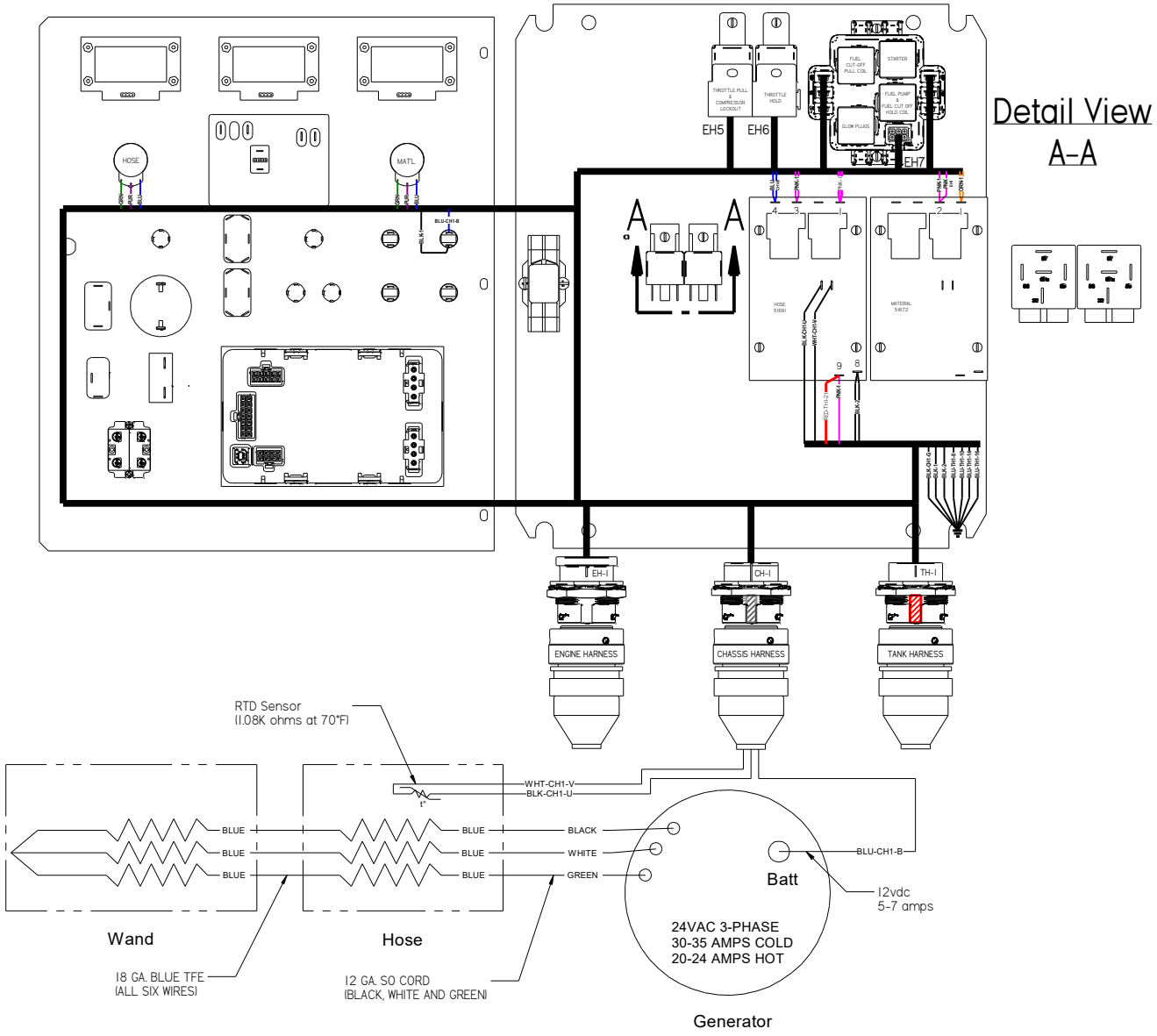


**Fig. 8-9 Hose Circuit Schematic**

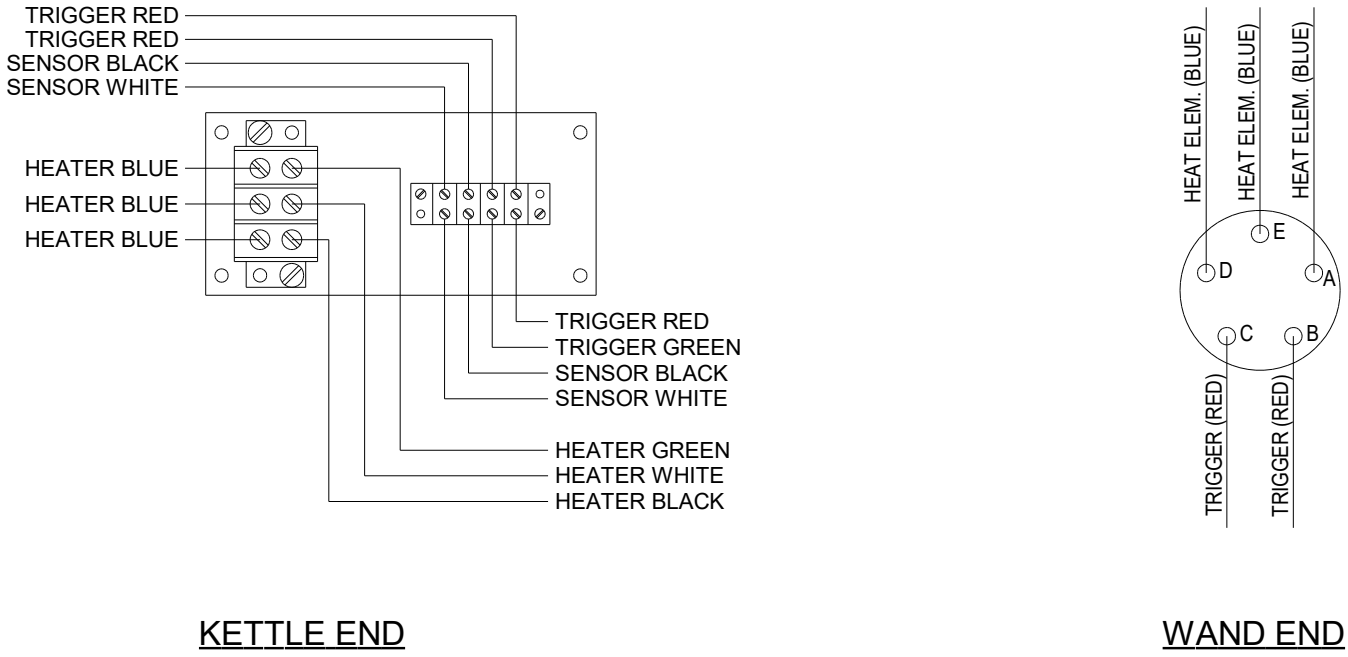


**Fig. 8-10 Junction Box Wiring**

### 8.3.3 Symptom: Trigger is not Working

**Table 8-19 Trigger is Not Working**

| Step | Possible Cause | If . . . |
|---|---|---|
| 1 | Check continuity between two red wires coming from the hose in junction box.<br>**NOTE:** These wires must be disconnected from the terminal block and the trigger depressed to perform this test. | • Yes, go to Table 8-22 Basic Visual Pump Troubleshooting.<br>• No, go to Step 2. |
| 2 | Disconnect the electrical connector between the hose and wand, check for continuity between C and B wand side. | • Yes, this hose needs to be repaired or replaced. Contact Crafco to send back the hose for repair.<br>• No, this wand needs to be repaired or replaced. Contact Crafco to send back the hose for repair. |

### 8.3.4 RTD Sensor Ohms vs. Temperature

Table 8-23 and Table 8-24 below shows what the ohm reading would be for a given temperature. The following are the instructions for using the table.

Measure the resistance (ohms) of the sensor in question with an ohm meter (See 7.3 Checking Resistance (Ohms)) in Section 7 How to Use a Multimeter.

Find the reading in the chart (columns 0 through 9).

Follow the row to the left and get the temperature in 10°F increments, then follow the column up to get the 1°F increment. (For example, 1391 Ohms = 215°F)

**Table 8-20 RTD Sensor Ohms vs. Temperature**

| °F | 0 | 1 | 2 | 3 | 4 | 5 | 6 | 7 | 8 | 9 |
|---|---|---|---|---|---|---|---|---|---|---|
| 0 | 930.3 | 932.5 | 934.7 | 936.9 | 939.1 | 941.3 | 943.4 | 945.6 | 947.8 | 950.0 |
| 10 | 952.2 | 954.3 | 956.5 | 958.7 | 960.9 | 963.0 | 965.2 | 967.4 | 969.6 | 971.8 |
| 20 | 973.9 | 976.1 | 978.3 | 980.5 | 982.6 | 984.8 | 987.0 | 989.1 | 991.3 | 993.5 |
| 30 | 995.7 | 997.8 | 1000.0 | 1002.2 | 1004.3 | 1006.5 | 1008.7 | 1010.9 | 1013.0 | 1015.2 |
| 40 | 1017.4 | 1019.5 | 1021.7 | 1023.9 | 1026.0 | 1028.2 | 1030.4 | 1032.5 | 1034.7 | 1036.9 |
| 50 | 1039.0 | 1041.2 | 1043.4 | 1045.5 | 1047.7 | 1049.8 | 1052.0 | 1054.2 | 1056.3 | 1058.5 |
| 60 | 1060.7 | 1062.8 | 1065.0 | 1067.1 | 1069.3 | 1071.5 | 1073.6 | 1075.8 | 1077.9 | 1080.1 |
| 70 | 1082.2 | 1084.4 | 1086.6 | 1088.7 | 1090.9 | 1093.0 | 1095.2 | 1097.3 | 1099.5 | 1101.6 |
| 80 | 1103.8 | 1106.0 | 1108.1 | 1110.3 | 1112.4 | 1114.6 | 1116.7 | 1118.9 | 1121.0 | 1123.2 |
| 90 | 1125.3 | 1127.5 | 1129.6 | 1131.8 | 1133.9 | 1136.1 | 1138.2 | 1140.4 | 1142.5 | 1144.7 |
| 100 | 1146.8 | 1149.0 | 1151.1 | 1153.2 | 1155.4 | 1157.5 | 1159.7 | 1161.8 | 1164.0 | 1166.1 |
| 110 | 1168.3 | 1170.4 | 1172.5 | 1174.7 | 1176.9 | 1179.0 | 1181.1 | 1183.3 | 1185.4 | 1187.5 |
| 120 | 1189.7 | 1191.8 | 1194.0 | 1196.1 | 1198.2 | 1200.4 | 1202.5 | 1204.6 | 1206.8 | 1208.9 |
| 130 | 1211.0 | 1213.2 | 1215.3 | 1217.5 | 1219.6 | 1221.7 | 1223.9 | 1226.0 | 1228.1 | 1230.3 |
| 140 | 1232.4 | 1234.5 | 1236.7 | 1238.9 | 1240.9 | 1243.0 | 1245.2 | 1247.3 | 1249.4 | 1251.6 |
| 150 | 1253.7 | 1255.8 | 1258.0 | 1260.1 | 1262.2 | 1264.3 | 1266.5 | 1268.6 | 1270.7 | 1272.8 |
| 160 | 1275.0 | 1277.1 | 1279.2 | 1281.3 | 1283.5 | 1285.6 | 1287.7 | 1289.8 | 1292.0 | 1294.1 |
| 170 | 1296.2 | 1298.3 | 1300.4 | 1302.6 | 1304.7 | 1306.8 | 1308.9 | 1311.0 | 1313.2 | 1315.3 |
| 180 | 1317.4 | 1319.5 | 1321.6 | 1323.8 | 1325.9 | 1328.0 | 1330.1 | 1332.2 | 1334.3 | 1336.5 |
| 190 | 1338.6 | 1340.7 | 1342.8 | 1344.9 | 1347.0 | 1349.1 | 1351.2 | 1353.4 | 1355.5 | 1357.6 |
| 200 | 1359.7 | 1361.8 | 1363.9 | 1366.0 | 1368.1 | 1370.2 | 1372.4 | 1374.5 | 1376.6 | 1378.7 |
| 210 | 1380.8 | 1382.9 | 1385.0 | 1387.1 | 1389.2 | 1391.3 | 1393.4 | 1395.5 | 1397.6 | 1399.7 |
| 220 | 1401.8 | 1403.9 | 1406.0 | 1408.1 | 1410.3 | 1412.4 | 1414.5 | 1416.6 | 1418.7 | 1420.8 |
| 230 | 1422.9 | 1425.0 | 1427.1 | 1429.2 | 1431.3 | 1433.4 | 1435.5 | 1437.6 | 1439.6 | 1441.7 |
| 240 | 1443.8 | 1445.9 | 1448.0 | 1450.1 | 1452.2 | 1454.3 | 1456.4 | 1458.5 | 1460.6 | 1462.7 |
| 250 | 1464.8 | 1466.9 | 1469.0 | 1471.1 | 1473.2 | 1475.3 | 1477.3 | 1479.4 | 1481.5 | 1483.6 |
| 260 | 1485.7 | 1487.8 | 1489.9 | 1492.0 | 1494.1 | 1496.1 | 1498.2 | 1500.3 | 1502.4 | 1504.5 |

©2026 by Crafco All Rights Reserved

# Chapter 8 Troubleshooting (43600, 57200, and 43600DX)

**Table 8-21 RTD Sensor Ohms vs. Temperature (continued)**

| °F | 0 | 1 | 2 | 3 | 4 | 5 | 6 | 7 | 8 | 9 |
|---|---|---|---|---|---|---|---|---|---|---|
| 270 | 1506.6 | 1508.7 | 1510.8 | 1512.8 | 1514.9 | 1517.0 | 1519.1 | 1521.2 | 1523.3 | 1525.3 |
| 280 | 1527.4 | 1529.5 | 1531.6 | 1533.7 | 1535.7 | 1537.8 | 1539.9 | 1542.0 | 1544.1 | 1546.1 |
| 290 | 1548.2 | 1550.3 | 1552.4 | 1554.5 | 1556.5 | 1558.6 | 1560.7 | 1562.8 | 1564.8 | 1566.9 |
| 300 | 1569.0 | 1571.1 | 1573.1 | 1575.2 | 1577.3 | 1579.4 | 1581.4 | 1583.5 | 1585.6 | 1587.7 |
| 310 | 1589.7 | 1591.8 | 1593.9 | 1595.9 | 1598.0 | 1600.1 | 1602.2 | 1604.2 | 1606.3 | 1608.4 |
| 320 | 1610.4 | 1612.5 | 1614.6 | 1616.6 | 1618.7 | 1620.8 | 1622.8 | 1624.9 | 1627.0 | 1629.0 |
| 330 | 1631.1 | 1633.2 | 1635.2 | 1637.3 | 1639.3 | 1641.4 | 1643.5 | 1645.5 | 1647.6 | 1649.7 |
| 340 | 1651.7 | 1653.8 | 1655.8 | 1657.9 | 1660.0 | 1662.0 | 1664.1 | 1666.1 | 1668.2 | 1670.2 |
| 350 | 1672.3 | 1674.4 | 1676.4 | 1678.5 | 1680.5 | 1682.6 | 1684.6 | 1686.7 | 1688.7 | 1690.8 |
| 360 | 1692.9 | 1694.9 | 1697.0 | 1699.0 | 1701.1 | 1703.1 | 1705.2 | 1707.2 | 1709.3 | 1711.3 |
| 370 | 1713.4 | 1715.4 | 1717.5 | 1719.5 | 1721.6 | 1723.6 | 1725.7 | 1727.7 | 1729.8 | 1731.8 |
| 380 | 1733.9 | 1735.9 | 1737.9 | 1740.0 | 1742.0 | 1744.1 | 1746.1 | 1748.2 | 1750.2 | 1752.3 |
| 390 | 1754.3 | 1756.3 | 1758.4 | 1760.4 | 1762.5 | 1764.5 | 1766.6 | 1768.6 | 1770.6 | 1772.7 |
| 400 | 1774.7 | 1776.8 | 1778.8 | 1780.8 | 1782.9 | 1784.9 | 1786.9 | 1789.0 | 1791.0 | 1793.1 |
| 410 | 1795.1 | 1797.1 | 1799.2 | 1801.2 | 1803.2 | 1805.3 | 1807.3 | 1809.3 | 1811.4 | 1813.4 |
| 420 | 1815.4 | 1817.5 | 1819.5 | 1821.5 | 1823.6 | 1825.6 | 1827.6 | 1829.6 | 1831.7 | 1833.7 |
| 430 | 1835.7 | 1837.8 | 1839.8 | 1841.8 | 1843.8 | 1845.9 | 1847.9 | 1849.9 | 1851.9 | 1854.0 |
| 440 | 1856.0 | 1858.0 | 1860.0 | 1862.1 | 1864.1 | 1866.1 | 1868.1 | 1870.2 | 1872.2 | 1874.2 |
| 450 | 1876.2 | 1878.2 | 1880.3 | 1882.3 | 1884.3 | 1886.3 | 1888.3 | 1890.4 | 1892.4 | 1894.4 |
| 460 | 1896.4 | 1898.4 | 1900.5 | 1902.5 | 1904.5 | 1906.5 | 1908.5 | 1910.5 | 1912.6 | 1914.6 |
| 470 | 1916.6 | 1918.6 | 1920.6 | 1922.6 | 1924.6 | 1926.6 | 1928.7 | 1930.7 | 1932.7 | 1934.7 |
| 480 | 1936.7 | 1938.7 | 1940.7 | 1942.7 | 1944.7 | 1946.8 | 1948.8 | 1950.8 | 1952.8 | 1954.8 |
| 490 | 1956.8 | 1958.8 | 1960.8 | 1962.8 | 1964.8 | 1966.8 | 1968.8 | 1970.8 | 1972.8 | 1974.8 |
| 500 | 1976.8 | 1978.8 | 1980.8 | 1982.9 | 1984.9 | 1986.9 | 1988.9 | 1990.9 | 1992.9 | 1994.9 |
| 510 | 1996.9 | 1998.9 | 2000.9 | 2002.9 | 2004.9 | 2006.9 | 2008.8 | 2010.8 | 2012.8 | 2014.8 |
| 520 | 2016.8 | 2018.8 | 2020.8 | 2022.8 | 2024.8 | 2026.8 | 2028.8 | 2030.8 | 2032.8 | 2034.8 |
| 530 | 2036.8 | 2038.8 | 2040.8 | 2042.8 | 2044.7 | 2046.7 | 2048.7 | 2050.7 | 2052.7 | 2054.7 |
| 540 | 2056.7 | 2058.7 | 2060.7 | 2062.7 | 2064.6 | 2066.6 | 2068.6 | 2070.6 | 2072.6 | 2074.6 |
| 550 | 2076.6 | 2078.5 | 2080.5 | 2082.5 | 2084.5 | 2086.5 | 2088.5 | 2090.4 | 2092.4 | 2094.4 |

©2026 by Crafco All Rights Reserved

## 8.4 Pump Troubleshooting

### 8.4.1 Symptom: Material Does Not Dispense When the Pump is Activated

**Table 8-22 Basic Visual Pump Troubleshooting**

| Step | Possible Cause | If . . . |
|---|---|---|
| 1 | Start Troubleshooting at the control box.<br>Is the Hose Temperature Display at or above 325°F? | • Yes, go to Step 2.<br>• No, continue to allow the machine to heat. (Make sure the Hose dial is set at the operating temperature.) |
| 2 | Is the red "Pump" light "ON"? | • Yes, go to Step 3.<br>• No, allow the hose to continue to heat. |
| 3 | With the wand in the shoebox, pull the wand trigger and look at the material pump shaft chain coupler.<br>Is it spinning clockwise? (Remove the chain guard if necessary.) | • Yes, go to Step 5.<br>• No, adjust the material flow control to increase the flow.<br>• No, go to Step 4. |
| 4 | Inside the control box and under the front panel, find the relay cube for the pump. It is found near the middle, left-hand side of the box. It is a clear yellow cube with a green button facing the top of the control box. When you press this button, material should dispense from the wand, so be careful.<br>Does the material pump shaft coupler turn when you press the green button? | • Yes, this tells you that everything from the cube relay to the hydraulic manifold is working properly, your issue is inside the hose and wand. Go to Table 8-17 Hose Electrical Troubleshooting, Steps 1 through 5 to find the problem.<br>• No, go to Step 5. |
| 5 | Is the hydraulic fluid level near the center of the sight gauge?<br>See Fig. 5-1 Hydraulic Fluid Level and Temp. Gauge | • Yes, go to Table 8-23 Pump Electrical Troubleshooting<br>• No, fill oil to the center of the sight gauge. |

### 8.4.2 Pump Electrical Troubleshooting

**NOTE:** Use Fig. 8-11 Pump Schematic while troubleshooting the pump electrical system.

**Table 8-23 Pump Electrical Troubleshooting**

| Step | Possible Cause | If . . . |
|---|---|---|
| 1 | Is the Hose Temperature at or above 325°F? | • Yes go to Step 2.<br>• No, continue to allow the machine to heat. |
| 2 | Is there 12 Vdc between the Hose PAKSTAT terminal #2 red and redCH1-L wire and terminal #8 blk-2 ground wire?<br>(Refer to the pump circuit schematic Fig. 8-11 Pump Schematic) | • Yes, go to Step 3.<br>• No, go to Step 2a. |
| 2a | Is there 12 Vdc between the Hose PAKSTAT terminal #1 pink wire and terminal #8 blk-2 ground wire? | • Yes, check for a broken wire or poor wire crimp on the terminal #2 red and redCH1-L wire and recheck for 12 Vdc. (If still no voltage, replace the Hose PAKSTAT.)<br>• No, go to Step 2b. |
| 2b | Is there 12 Vdc between the Hose PAKSTAT terminal #9 pink wire and terminal #8 blk-2 ground wire? | • Yes, check for a broken wire or poor wire crimp on terminal #1 pink wire. (If you have 12 Vdc on terminal #9 pink then you must have 12 Vdc on terminal #1 pink wire; they are the same wire.)<br>• No, If this is the case you would have had a hose heating issue. |
| 3 | Move to the junction box at the rear of the machine and open the cover.<br>Is there 12 Vdc between the trigger red wire coming from the control box and a nearby ground source? | • Yes, go to Step 3a.<br>• No, check for a broken wire or poor wire crimp between the junction box and the control box red wire labeled red-trig. |
| 3a | Is there 12 Vdc between the trigger red wire going toward the hose (just above where you checked in Step 4) and a nearby ground source? | • Yes go to Step 3b.<br>• No, check for a broken wire or poor wire crimp on the red trigger going toward the hose. |

**Table 8-24 Pump Electrical Troubleshooting (continued)**

| Step | Possible Cause | If . . . |
|---|---|---|
| 3b | Is there 12 Vdc between the trigger red wire going toward the hose and a nearby ground source?<br>(Make sure the wand trigger is pulled during this Step.) | • Yes, go to Step 3c.<br>• No, go to Step 4. |
| 3c | Is there 12 Vdc between the trigger green/white-CH1-M wire coming from the control box and a nearby ground source?<br>(Make sure the wand trigger is pulled during this Step.) | • Yes, go to Step 5.<br>• No, check for a broken wire or poor wire crimp on the green trigger wire going to the control box. |
| 4 | Disconnected the five-pin connector between the hose and wand. Refer to Fig. 8-10 Junction Box Wiring<br>Is there continuity on the wand connector between red trigger "C" post and red trigger "B" post while the wand trigger is pulled? | • Yes, go to Step 4a.<br>• No, call Crafco and request an RA # so you can send your wand back for repair. |
| 4a | Disconnect the two red trigger wires in the junction box going toward the hose. Move the wand end of the hose next to the junction box.<br>Is there continuity on the hose connector "C" socket and only one red trigger in the junction box?<br>(Check both red trigger wires in the junction box one at a time.) | • Yes, go to Step 4b.<br>• No, recheck the hose connector "C" socket to the other red trigger wire in the junction box. (You want to see continuity between only one red trigger wire and the "C" socket.)<br>• Still no or continuity to both red trigger wire, then call Crafco and request an RA# so you can send your hose back for repair. |
| 4b | Is there continuity on the hose connector "B" socket and red trigger in the junction box? | • Yes, call Crafco and speak to a service technician, you should have found the problem.<br>• No, recheck the hose connector "B" socket to the other red trigger wire in the junction box. (You want to see continuity between only one red trigger wire and the "B" socket.)<br>• Still no or continuity to both red trigger wire, then call Crafco and request an RA# so you can send your hose back for repair. |

**Table 8-25 Pump Electrical Troubleshooting (continued)**

| Step | Possible Cause | If . . . |
|---|---|---|
| 5 | Move back to the control box.<br>Is there 12 Vdc between the pump relay base #14 terminal green/white-CH1-M trigger wire and the #13 terminal blk-2 ground wire, when the trigger is pulled? | • Yes, go to Step 6.<br>• No, check for a broken wire or loose wire at the relay base on both the green trigger wire and the two black ground wires. Also check for any damage to the green/white-CH1-M trigger wire from the junction box to the control box. |
| 6 | Is there 12 Vdc between the pump relay base #12 terminal red-3 wire and the #13 terminal blk-2 ground wire? | • Yes, go to Step 7.<br>• No, go to Step 6a. |
| 6a | Is there 12 Vdc between the circuit breaker bottom post red-3 wire and the pump relay base #13 terminal blk-2 ground wire? | • Yes, check for a broken wire or loose wire at the circuit breaker and at the terminal block red wire.<br>• No, if this is the case you would have had problems with the burner working. Call Crafco and speak to a service technician. |
| 7 | Is there 12 Vdc between the pump relay base #8 terminal brn-TH1-9 pump wire and the #13 terminal blk-2 ground wire? | • Yes, go to Step 8.<br>• No, replace the pump relay cube. |
| 8 | Move to the rear of the machine. Remove the cover over the hydraulic manifold.<br>Is the amber light "ON" when the wand trigger is pulled?<br>(Looking down at the top of the hydraulic valve, Pump forward is the din plug lower right-hand corner, Refer to Fig. 8-7 Din Plug Layout.) | • Yes, go to Step 9.<br>• No, go to Step 8a. |

**Table 8-26 Pump Electrical Troubleshooting (continued)**

| Step | Possible Cause | If . . . |
|---|---|---|
| 8a | Unscrew the din plug center screw so you can pull the din plug up about 1/4", so you can check for voltage.<br>Is there 12 Vdc from side post to side post, when the wand trigger is pulled? | • Yes, the electrical system for the agitator is working properly, go to Table 8-29 Pump Hydraulic Troubleshooting.<br>• No, recheck the amber light, if the light comes "ON" and you do not have 12 Vdc then replace the din plug. |
| 9 | Does the hydraulic pump shaft coupler turn counterclockwise, when you hold the "Pump" toggle switch in the "Reverse" position? | • Yes, this feature is working properly.<br>• No, go to Step 9a. |
| 9a | Is the amber light "ON" when you hold the "Pump" toggle switch in the "Reverse" position?<br>(Looking down at the top of the hydraulic valve, Pump reverse is the din plug lower left-hand corner, Refer to Fig. 8-7 Din Plug Layout.) | • Yes, go to Step 9e.<br>• No, go to Step 9b. |
| 9b | Is there 12 Vdc between the "Pump" toggle switch bottom post brn-TH1-7 wire and the blue (4) wires ground din plug, when the toggle switch is in the "Reverse" position? (Refer to Fig. 8-7 Din Plug Layout.) | • Yes, go to Step 9e.<br>• No, go to Step 9c. |
| 9c | Is there 12 Vdc between the "Pump" toggle switch center post red-TH1-26 wire and the blue (4) wires ground din plug? | • Yes, replace the toggle switch.<br>• No, go to Step 9d. |

### Table 8-27 Pump Electrical Troubleshooting (continued)

| Step | Possible Cause | If . . . |
|---|---|---|
| 9d | Is there 12 Vdc between the "Mixer" toggle switch center post red-TH1-26 wire and the blue (4) wires ground din plug? | • Yes, check for a broken wire or poor wire crimp on the red wire between the "Mixer" toggle switch and the "Pump" toggle switch.<br>• No, if this is the case you have had an agitator problem. Call Crafco and speak to a service technician. |
| 9e | Unscrew the din plug center screw so you can pull the din plug up about 1/4", so you can check for voltage. Is there 12 Vdc from side post to side post, when the wand trigger is pulled? | • Yes, the electrical system for the agitator is working properly, go to Table 8-29 Pump Hydraulic Troubleshooting.<br>• No, recheck the amber light, if the light comes "ON" and you do not have 12 Vdc then replace the din plug. |

### Table 8-28 Pump Electrical Troubleshooting (continued)

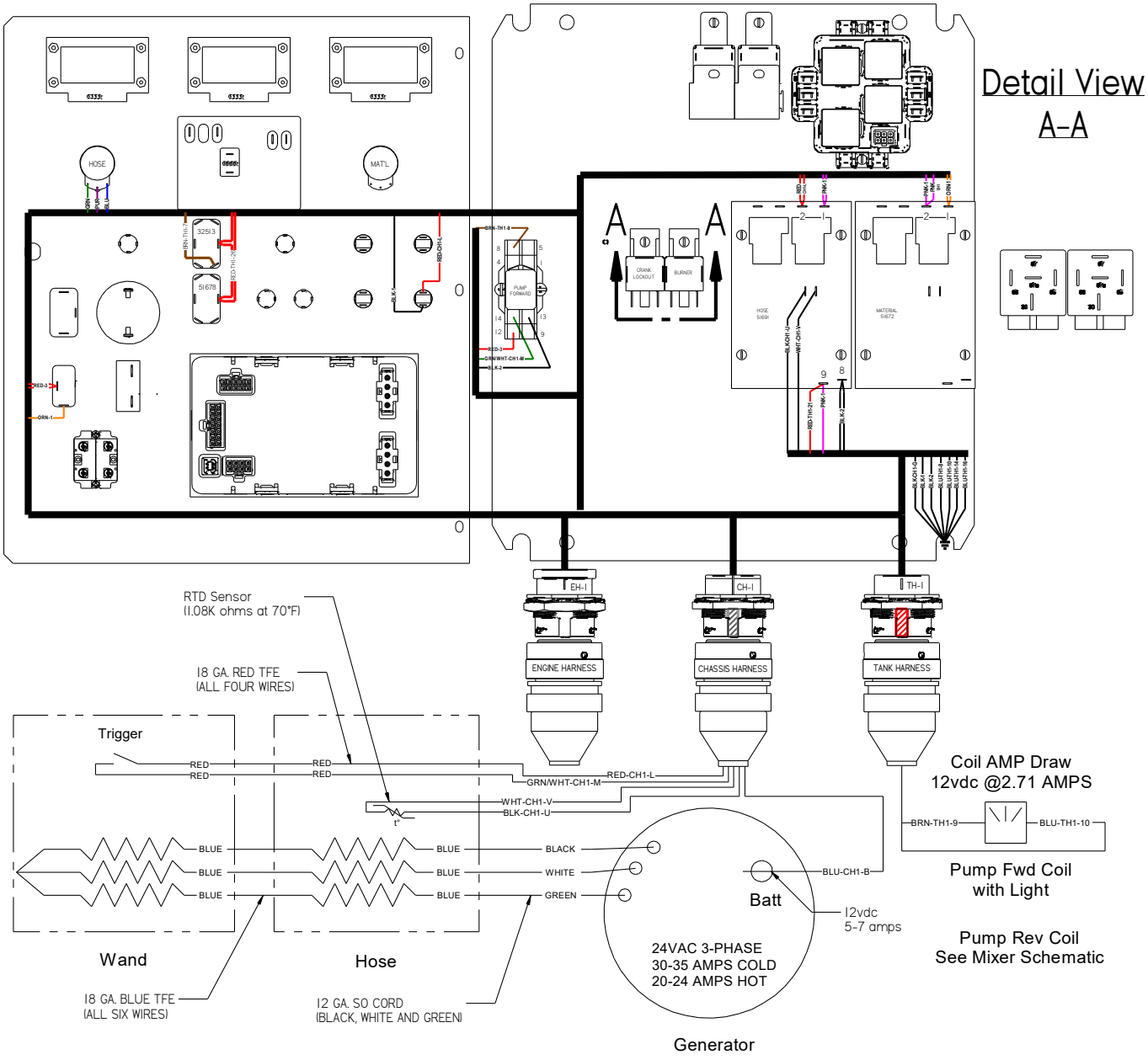


### Fig. 8-11 Pump Schematic

### 8.4.3 Pump Hydraulic Troubleshooting

**Table 8-29 Pump Hydraulic Troubleshooting**

| Step | Possible Cause | If… |
|---|---|---|
| 1 | Does the coil magnetize when the din plug amber light is “ON”? | • Yes, go to Step 2.<br>• No, remove the din plug, then remove the coil by unscrewing the nut on the end of the coil. With the coil removed, re-attach the din plug and place a metal screwdriver in the center of the coil to see if the coil is magnetic. If it is not, re-check the din plug is plugged into the coil and the amber light is “ON”. If still not magnetic replace the coil. |
| 2 | Is the relief pressure set correctly?<br>(Refer to Fig. 8-6 Hydraulic Valve Pressure Setting). | • Yes, go to Step 3.<br>• No, first turn “OFF” the diesel engine, then remove one of the two hydraulic hoses going to the pump hydraulic motor, cap off the fitting on the motor and use a 3000 PSI gauge with the proper JIC fitting, attach it to the hose. Start the diesel engine, turn “ON” the main power in the control box, pull the wand trigger and read the pressure gauge. If the pressure needs to be adjusted use the pressure relief valve marked “RVP”, loosen the jam nut and adjust the pressure with the allen screw at the end of the relief. Turn clockwise to increase pressure and counterclockwise to decrease pressure, then tighten the jam nut to lock pressure. Next turn “OFF” the diesel engine, remove the cap, pressure gauge and re-attach the hose. |
| 3 | Is the hydraulic flow correct from the hydraulic pump?<br>(Refer to Fig. 8-6 Hydraulic Valve Pressure Setting). | • Yes, call Crafco and speak to a service technician. You should have been able to find the problem.<br>• No, call a local hydraulic shop to see if they can run a hydraulic pump flow test, using the information in Fig. 8-6 Hydraulic Valve Pressure Setting. |

## 8.5 Engine Event History Log

### 8.5.1 How to Access Engine "Event History" in Digital Engine Controller for Non-ECU (Electronic Control Unit) Controlled Melters

The engines we use are non-ECU controlled, either from Isuzu or Deutz in the 25HP range. They are referred to as analog controlled engines and have a throttle solenoid to control the speed of the engine.

The digital engine controller stores operational fault events that trigger the "check engine light" that would cause the engine to shut down or not start for one reason or another. Listed below is how to access the "events history" to help diagnose why an engine may be malfunctioning by viewing start up, running and shutdown history. All the information is date and time stamped. To access the history, use the digital engine controller in the control box of the machine by pushing the following buttons:

- **Turn key ON -> Press OFF button -> Press ENTER -> SCROLL to EVENTS History and Press ENTER -> use UP and DOWN buttons to scroll through the log.**

Some of the events it logs:

- Over speed, low oil pressure, high engine temp, under speed, and more!

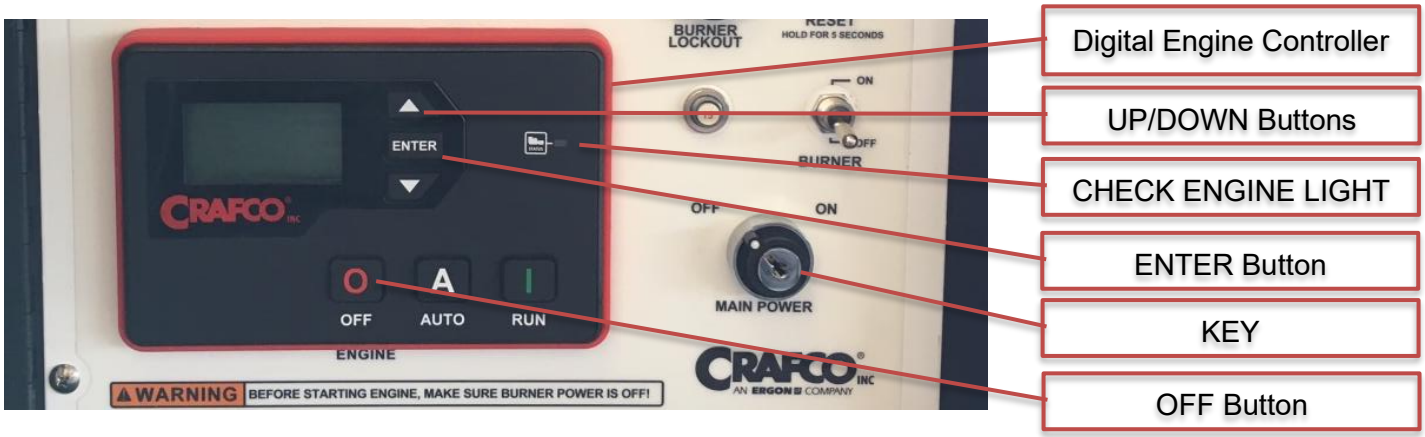

# Chapter 9 Illustrated Parts List

## 9.0 About the Illustrated Parts List

The Illustrated Parts List (IPL) is designed to help technical service or maintenance personnel correctly identify orderable replacement parts.

The figure and table titles reference the part number (PN) to which they apply. The PNs for each of the Super Shot 125 Diesel Melter machine models are as follows:

- Super Shot 125 Diesel Melter PN 43600
- Super Shot 125 Diesel Melter Skid Mount Assembly 57200
- Super Shot 125 Diesel Melter Dual Axle PN 43600DX

Illustrations are designed to show general shape and size of a part and the relationship that part has to other parts. Actual size and shape of parts or components may differ or vary from the actual part or component.

## 9.1 Ordering Crafco Parts

Crafco distributors and Crafco Pavement Preservation Supply Centers are strategically located throughout the United States. Parts can be ordered from your local Crafco distributor or directly from Crafco if a distributor is not available in your area.
When ordering parts, provide the following information:

- Part Number
- Machine Model
- Serial Number

Call or Email Crafco at the following:
Crafco Customer Service
Phone: (602) 276-0406
CustomerService@Crafco.com

**Visit our website at www.crafco.com**

©2026 by Crafco All Rights Reserved

### 9.2 Super Shot 125 Diesel Melter Assembly 43600

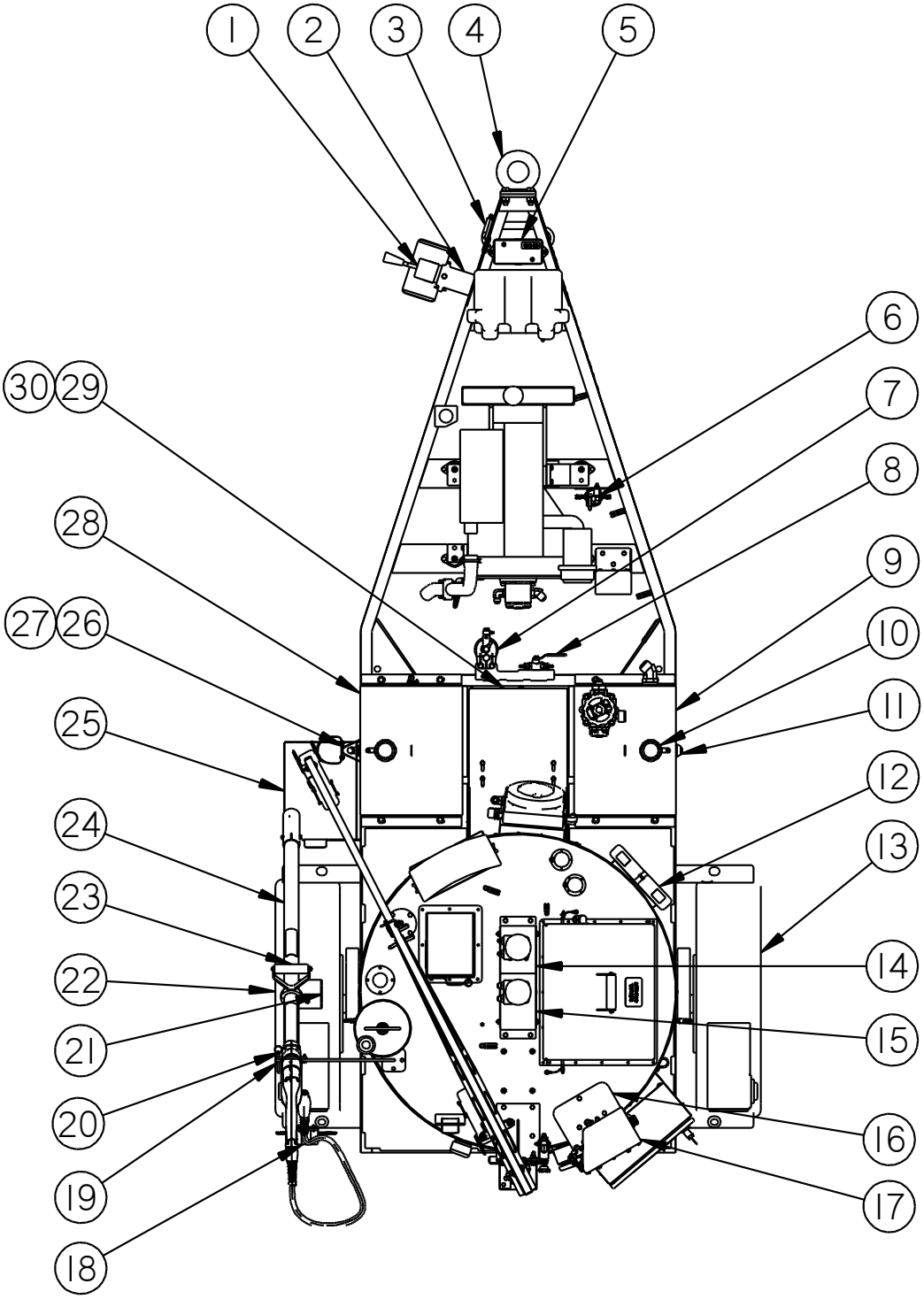


**Fig. 9-1 Super Shot 125 Diesel Melter: PN 43600**

©2026 by Crafco All Rights Reserved

# Chapter 9 Illustrated Parts List

**Table 9-1 Super Shot 125 Diesel Melter: PN 43600**

| FIG. | ITEM | PART NO. | DESCRIPTION | QTY. |
|---|---|---|---|---|
| Fig. 9-1 | 1 | 23082 | TONGUE JACK | 1 |
| | 2 | 23095 | SWIVEL BUSHING | 1 |
| | 3 | 23117 | BREAKAWAY SWITCH | 1 |
| | 4 | 20014 | 3” PINTLE HITCH | OPT. |
| | 5 | 38020N | JUNCTION BOX, TRAILER LIGHT | 1 |
| | 6 | 47150 | WATER SEPARATOR | 1 |
| | 7 | 47345N | FILTER ASSEMBLY (41867 FILTER ONLY) | 1 |
| | 8 | 29195 | ¼” BALL VALVE | 1 |
| | 9 | 43595S | HYDRAULIC TANK ASSEMBLY SALES | 1 |
| | 10 | 43579 | FILLER BREATHER | 1 |
| | 11 | 45415 | HYDRAULIC SIGHT GAUGE | 1 |
| | 12 | 25289 | RECORD BOX | 1 |
| | 13 | 44779 | PASSENGER SIDE FENDER ASSEMBLY | 1 |
| | 14 | 44832 | PUMP / AGITATOR MOTOR ASSEMBLY | 1 |
| | 15 | 43727 | CHAIN GUARD ASSEMBLY | 2 |
| | 16 | 52536N | MOUNT, HYDRAULIC VALVE | 1 |
| | 17 | 52535N | ANGLED COVERED, CONTROL VALVE | 1 |
| | 18 | 44797 | LED LICENSE PLATE LAMP | 1 |
| | 19 | 45989 | LOCKING ARM, WAND SUPPORT | 1 |
| | 20 | 26104 | ¼ X 2.5 GRIP QUICK RELEASE PIN | 1 |
| | 21 | 45562 | HOSE GUIDE | 1 |
| | 22 | 44778 | DRIVER SIDE FENDER ASSEMBLY | 1 |
| | 23 | 43768 | WAND HANDLE | 1 |
| | 24 | 52200 | ELECTRIC HEATED WAND ASSEMBLY 48” | 1 |
| | 25 | 43624 | DRIP PAN ASSEMBLY | 1 |
| | 26 | 44817 | FITTING, SIGHT GAUGE ELBOW | 2 |
| | 27 | 44818 | TUBING, FUEL SIGHT GAUGE | 1 |
| | 28 | 45190S | DIESEL FUEL TANK ASSEMBLY SALES | 1 |
| | 29 | 43114 | COVER, BURNER | 1 |
| | 30 | 46380 | 14 VOLT BURNER | 1 |

©2026 by Crafco All Rights Reserved

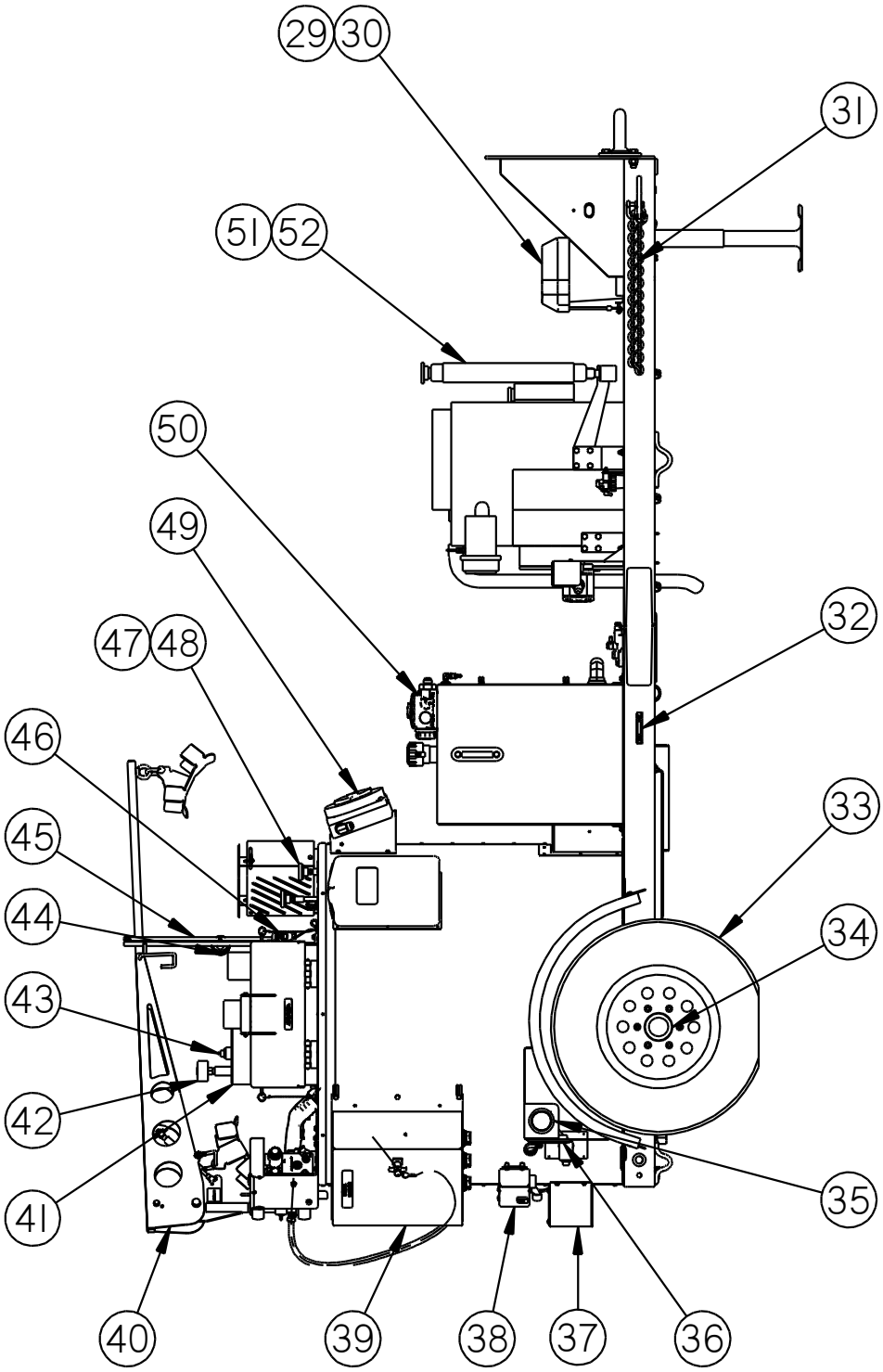


Fig. 9-2 Super Shot 125 Diesel Melter: PN 43600 (continued)

**Table 9-2 Super Shot 125 Diesel Melter: PN 43600 (continued)**

| FIG. | ITEM | PART NO. | DESCRIPTION | QTY. |
|---|---|---|---|---|
| Fig. 9-2 | 29 | 24002 | BATTERY BOX | 1 |
| | 30 | 24000 | 12V BATTERY | 1 |
| | 31 | 20130 | 48” SAFETY CHAIN | 2 |
| | 32 | 32365 | YELLOW LED CLEARANCE MARKER | 2 |
| | 33 | 44342 | TIRE AND WHEEL ASSEMBLY | 2 |
| | 34 | 43535 | TORSIONAL AXLE ASSEMBLY | 1 |
| | 35 | 32364 | 2 ½ RED LED SIDE MARKER | 2 |
| | 36 | 32363 | 4” RED LED STOP, TURN AND TAILLIGHT | 2 |
| | 37 | 43821 | HEAT GUARD | 1 |
| | 38 | 44027 | JUNCTION BOX ASSEMBLY | 1 |
| | 39 | 47250N | CONTROL BOX ASSEMBLY | 1 |
| | 40 | 52500N | BOOM ASSY, SS FLEX BOOM | 1 |
| | 41 | 43355 | OVERFLOW TANK | 1 |
| | 42 | 26025 | AIR BREATHER, HEAT TRANSFER OIL | 1 |
| | 43 | 47475N | DIP STICK, HEAT TRANSFER OIL | 1 |
| | 44 | 46306 | KNOB, THREADED BOOM LOCK | 1 |
| | 45 | 45582 | BOOM LOCK ASSEMBLY | 1 |
| | 46 | 39608 | LID SWITCH | 1 |
| | 47 | 43465 | RTD SENSOR | 2 |
| | 48 | 51065 | CORD GRIP, RTD SENSOR | 2 |
| | 49 | 45541 | HYDRAULIC COOLER SMALL | 1 |
| | 50 | 45430 | HYDRAULIC FILTER ASSEMBLY | 1 |
| | 50a | 45438 | HYDRAULIC FILTER ELEMENT | - |
| | 50b | 45440 | O-RING, HYDRAULIC FILTER | - |
| | 50c | 45441 | GASKET, HYDRAULIC FILTER | - |
| | 50d | 45437 | GAUGE, HYDRAULIC FILTER | - |
| | 51 | 47125N | ISUZU 3CH1 ENGINE ASSEMBLY | 1 |
| | 51 | 47125D | DEUTZ D1.2 ENGINE ASSEMBLY | 1 |
| | 52 | 29399 | ISOMOUNT (ENGINE TO FRAME NOT SHOWN) | 4 |

©2026 by Crafco All Rights Reserved

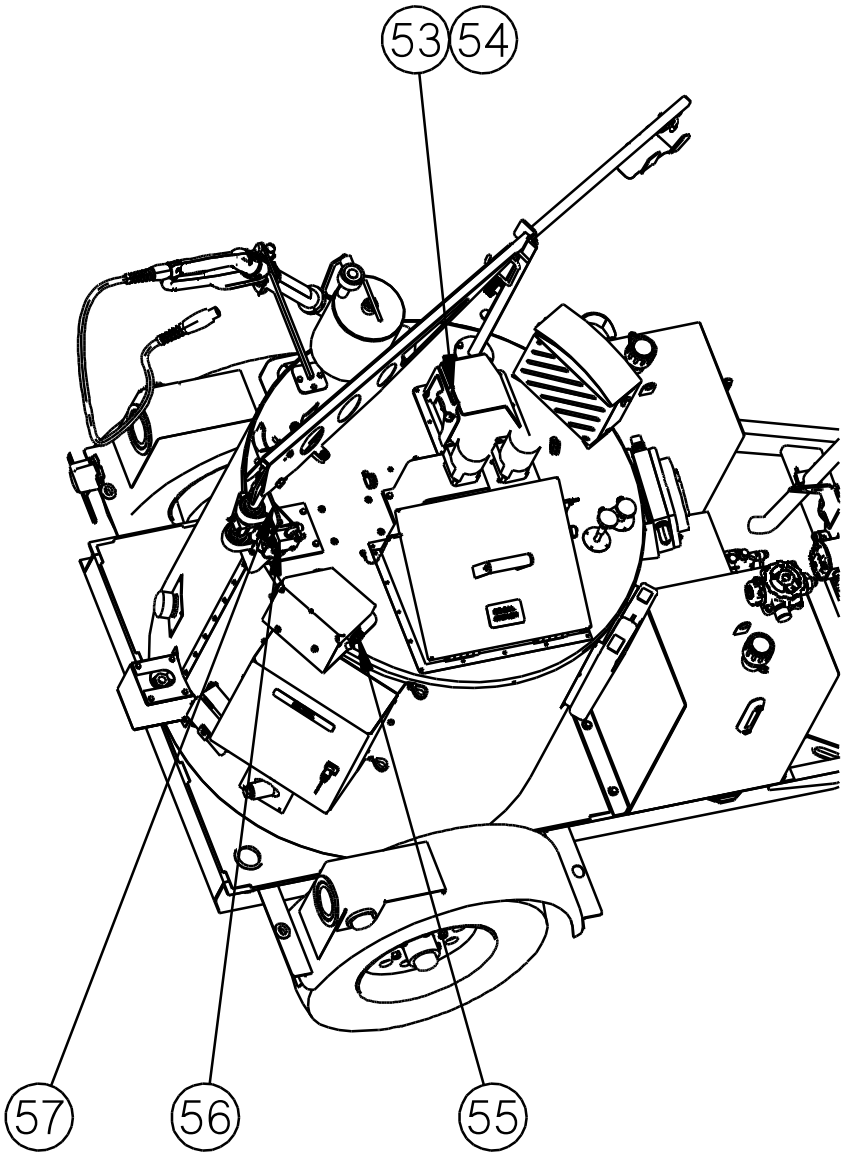


**Fig. 9-3 Super Shot 125 Diesel Melter: PN 43600 (continued)**

©2026 by Crafco All Rights Reserved

**Table 9-3 Super Shot 125 Diesel Melter: PN 43600 (continued)**

| FIG. | ITEM | PART NO. | DESCRIPTION | QTY. |
|---|---|---|---|---|
| Fig. 9-3 | 53 | 47247N | FULL CLOSE SHOE BOX COVER | 1 |
| | 54 | 47277N | COVER SHOE BOX ZINC PLATED | 1 |
| | 55 | 45420 | HYDRAULIC VALVE ASSEMBLY | 1 |
| | 56 | 46060 | FLOW CONTROL VALVE | 1 |
| | 57 | 45579 | BOOM SUPPORT ASSEMBLY | 1 |
| | 58 | 52405 | 18’ ELECTRIC HEATED HOSE (NOT SHOWN) | 1 |
| | 59 | 31512 | 30 AMP CIRCUIT BREAKER (NOT SHOWN) | 1 |

©2026 by Crafco All Rights Reserved

### 9.3 Super Shot 125 Diesel Melter Skid Mount Assembly 57200

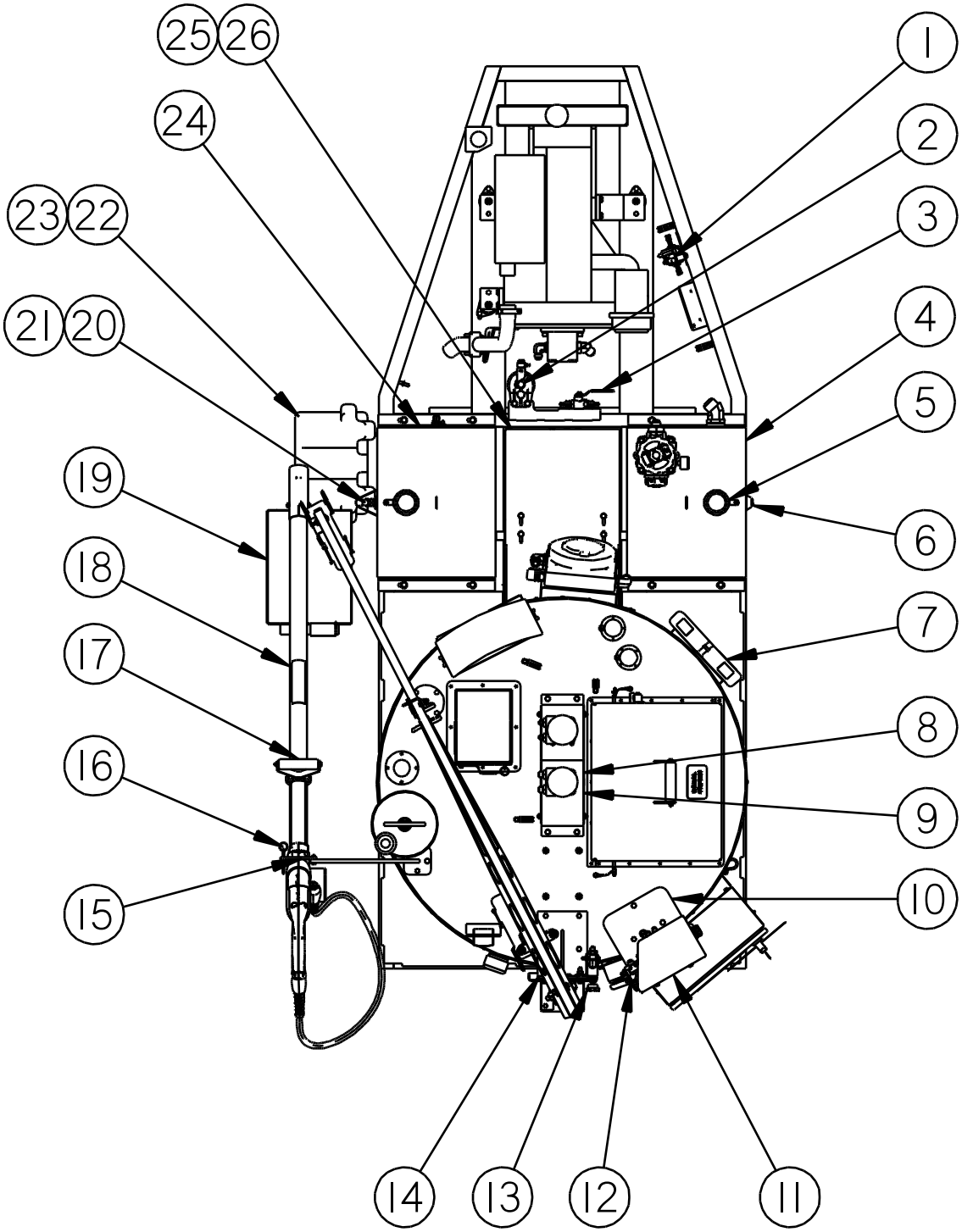


**Fig. 9-4 Super Shot 125 Diesel Melter Skid Mount Assembly 57200**

©2026 by Crafco All Rights Reserved

# Chapter 9 Illustrated Parts List

**Table 9-4 Super Shot 125 Diesel Melter Skid Mount Assembly 57200**

| FIG. | ITEM | PART NO. | DESCRIPTION | QTY. |
|---|---|---|---|---|
| Fig. 9-4 | 1 | 47150 | WATER SEPARATOR | 1 |
| | 2 | 47345N | FILTER ASSEMBLY (41867 FILTER ONLY) | 1 |
| | 3 | 29195 | ¼” BALL VALVE | 1 |
| | 4 | 43595S | HYDRAULIC TANK ASSEMBLY SALES | 1 |
| | 5 | 43579 | FILLER BREATHER | 1 |
| | 6 | 45415 | HYDRAULIC SIGHT GAUGE | 1 |
| | 7 | 25289 | RECORD BOX | 1 |
| | 8 | 44832 | PUMP / AGITATOR MOTOR ASSEMBLY | 1 |
| | 9 | 43727 | CHAIN GUARD ASSEMBLY | 2 |
| | 10 | 52536N | MOUNT, HYDRAULIC VALVE | 1 |
| | 11 | 52535N | ANGLED COVERED, CONTROL VALVE | 1 |
| | 12 | 45420 | HYDRAULIC VALVE ASSEMBLY | 1 |
| | 13 | 46060 | FLOW CONTROL VALVE | 1 |
| | 14 | 45579 | BOOM SUPPORT ASSEMBLY | 1 |
| | 15 | 45989 | LOCKING ARM, WAND SUPPORT | 1 |
| | 16 | 26104 | ¼ X 2.5 GRIP QUICK RELEASE PIN | 1 |
| | 17 | 43768 | WAND HANDLE | 1 |
| | 18 | 52200 | ELECTRIC HEATED WAND ASSEMBLY 48” | 1 |
| | 19 | 43624 | DRIP PAN ASSEMBLY | 1 |
| | 20 | 44817 | FITTING, SIGHT GAUGE ELBOW | 2 |
| | 21 | 44818 | TUBING, FUEL SIGHT GAUGE | 1 |
| | 22 | 24002 | BATTERY BOX | 1 |
| | 23 | 24000 | 12V BATTERY | 1 |
| | 24 | 45190S | DIESEL FUEL TANK ASSEMBLY SALES | 1 |
| | 25 | 43114 | COVER, BURNER | 1 |
| | 26 | 46380 | 14 VOLT BURNER | 1 |

©2026 by Crafco All Rights Reserved

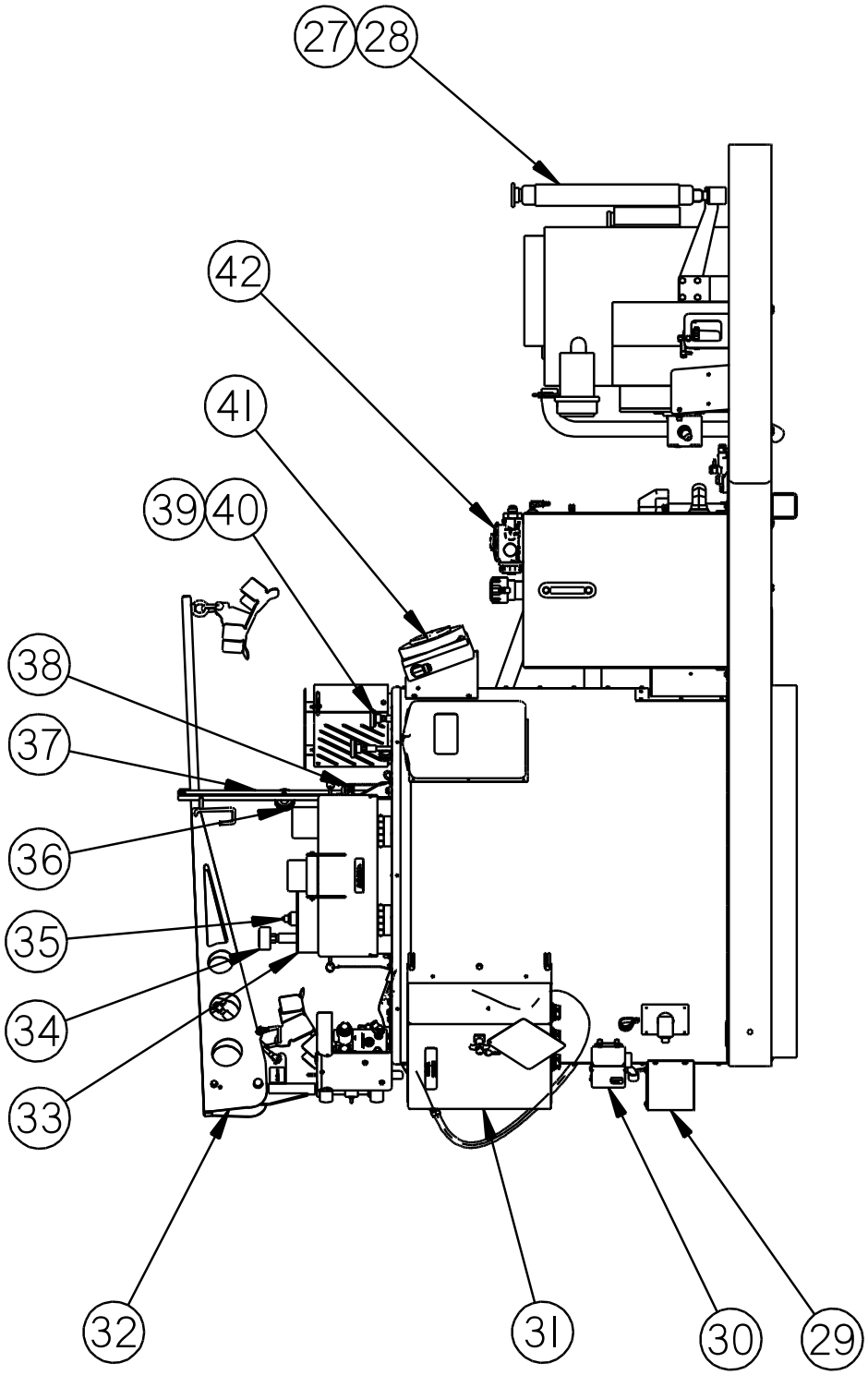


Fig. 9-5 Super Shot 125 Diesel Melter Skid Mount Assembly 57200 (continued)

©2026 by Crafco All Rights Reserved

### Table 9-5 Super Shot 125 Diesel Melter Skid Mount Assembly 57200 (continued)

| FIG. | ITEM | PART NO. | DESCRIPTION | QTY. |
|---|---|---|---|---|
| Fig. 9-5 | 27 | 47125N | ISUZU 3CH1 ENGINE ASSEMBLY | 1 |
| | 27 | 47125D | DEUTZ D1.2 ENGINE ASSEMBLY | 1 |
| | 28 | 29399 | ISOMOUNT (ENGINE TO FRAME NOT SHOWN) | 4 |
| | 29 | 43821 | HEAT GUARD | 1 |
| | 30 | 44027 | JUNCTION BOX ASSEMBLY | 1 |
| | 31 | 47250N | CONTROL BOX ASSEMBLY | 1 |
| | 32 | 52500N | BOOM ASSY, SS FLEX BOOM | 1 |
| | 33 | 43355 | OVERFLOW TANK | 1 |
| | 34 | 26025 | AIR BREATHER, HEAT TRANSFER OIL | 1 |
| | 35 | 47475N | DIP STICK, HEAT TRANSFER OIL | 1 |
| | 36 | 46306 | KNOB, THREADED BOOM LOCK | 1 |
| | 37 | 45582 | BOOM LOCK ASSEMBLY | 1 |
| | 38 | 39608 | LID SWITCH (NOT ON CE UNITS) | 1 |
| | 39 | 43465 | RTD SENSOR | 2 |
| | 40 | 51065 | CORD GRIP, RTD SENSOR | 2 |
| | 41 | 45541 | HYDRAULIC COOLER SMALL | 1 |
| | 42 | 45430 | HYDRAULIC FILTER ASSEMBLY | 1 |
| | 42a | 45438 | HYDRAULIC FILTER ELEMENT | - |
| | 42b | 45440 | O-RING, HYDRAULIC FILTER | - |
| | 42c | 45441 | GASKET, HYDRAULIC FILTER | - |
| | 42d | 45437 | GAUGE, HYDRAULIC FILTER | - |

©2026 by Crafco All Rights Reserved

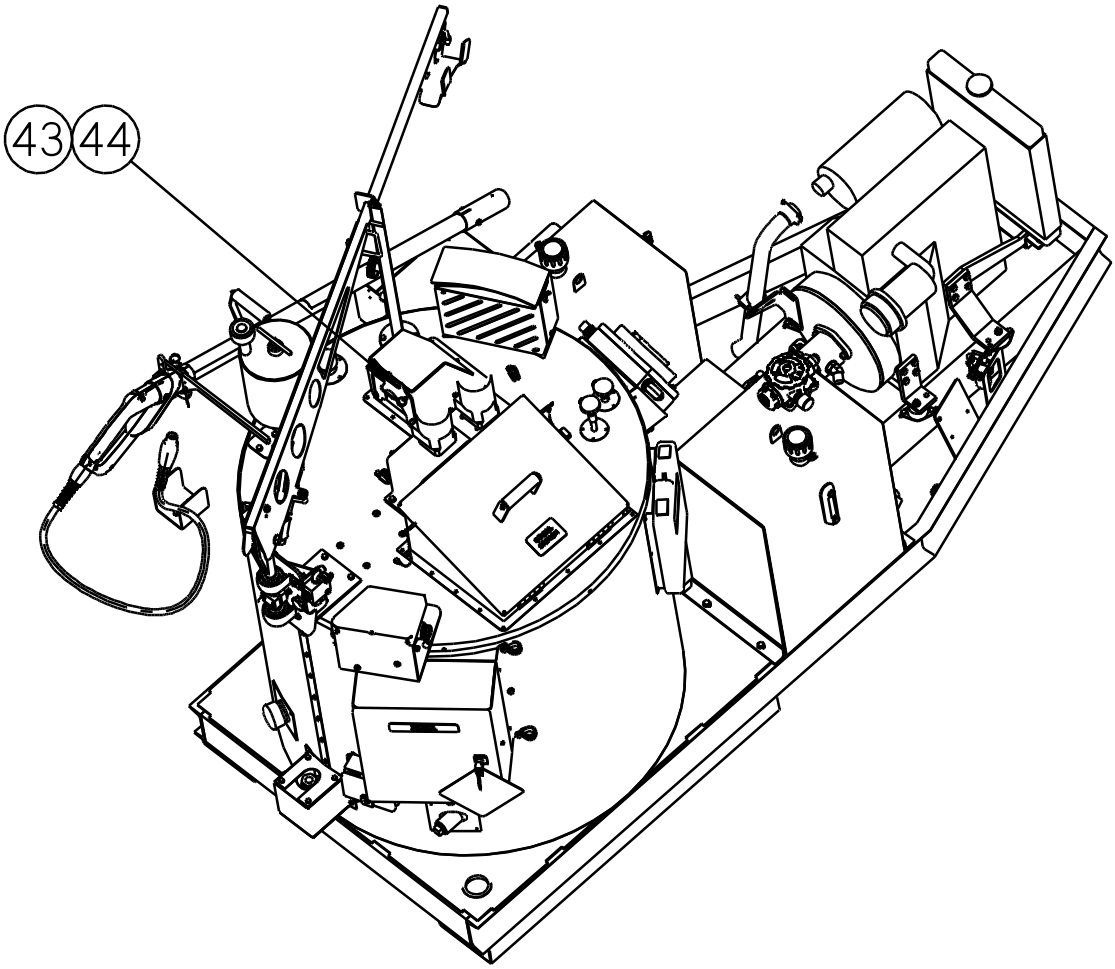


**Fig. 9-6 Super Shot 125 Diesel Melter Skid Mount Assembly 57200 (continued)**

©2026 by Crafco All Rights Reserved

**Table 9-6 Super Shot 125 Diesel Melter Skid Mount Assembly 57200 (continued)**

| FIG. | ITEM | PART NO. | DESCRIPTION | QTY. |
|---|---|---|---|---|
| Fig. 9-6 | 43 | 47247N | FULL CLOSE SHOE BOX COVER | 1 |
| | 44 | 47277N | COVER SHOE BOX ZINC PLATED | 1 |
| | 45 | 52405 | 18’ ELECTRIC HEATED HOSE (NOT SHOWN) | 1 |
| | 46 | 31512 | 30 AMP CIRCUIT BREAKER (NOT SHOWN) | 1 |

©2026 by Crafco All Rights Reserved

### 9.4 Super Shot 125 Diesel Melter Dual Axle PN 43600DX

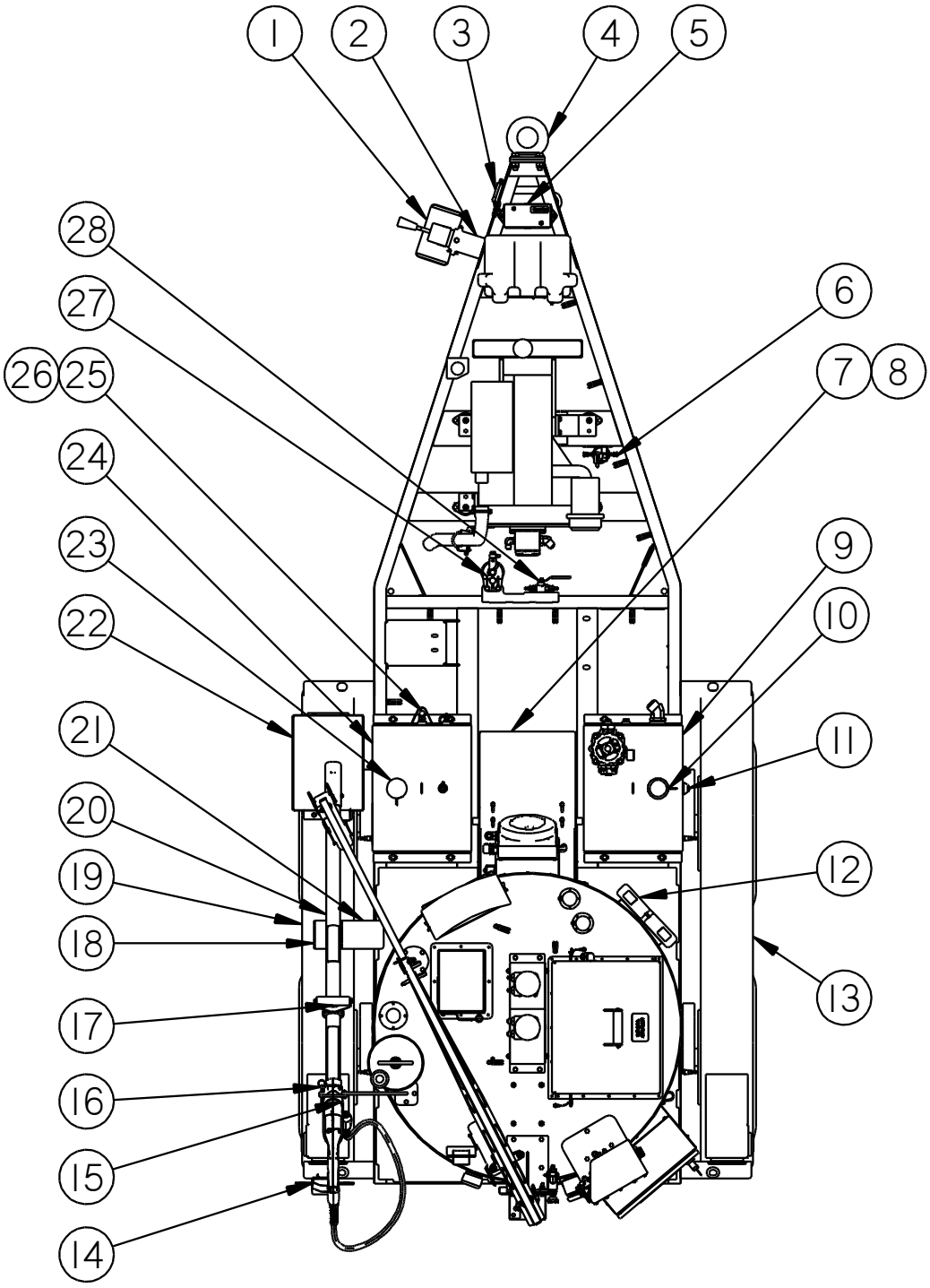


Fig. 9-7 Super Shot 125 Diesel Melter Dual Axle PN 43600DX

©2026 by Crafco All Rights Reserved

**Table 9-7 Super Shot 125 Diesel Melter Dual Axle PN 43600DX**

| FIG. | ITEM | PART NO. | DESCRIPTION | QTY. |
|---|---|---|---|---|
| Fig. 9-7 | 1 | 23082 | TONGUE JACK | 1 |
| | 2 | 23095 | SWIVEL BUSHING | 1 |
| | 3 | 23117 | BREAKAWAY SWITCH | 1 |
| | 4 | 20014 | 3” PINTLE HITCH | OPT. |
| | 5 | 38020N | JUNCTION BOX, TRAILER LIGHT | 1 |
| | 6 | 47150 | WATER SEPARATOR | 1 |
| | 7 | 43114 | COVER, BURNER | 1 |
| | 8 | 46380 | 14 VOLT BURNER | 1 |
| | 9 | 43590S | HYDRAULIC TANK ASSEMBLY SALES | 1 |
| | 10 | 43579 | FILLER BREATHER | 1 |
| | 11 | 45415 | HYDRAULIC SIGHT GAUGE | 1 |
| | 12 | 25289 | RECORD BOX | 1 |
| | 13 | 44781 | PASSENGER SIDE FENDER ASSEMBLY | 1 |
| | 14 | 44797 | LED LICENSE PLATE LAMP | 1 |
| | 15 | 45559 | LOCKING ARM, WAND SUPPORT | 1 |
| | 16 | 26104 | ¼ X 2.5 GRIP QUICK RELEASE PIN | 1 |
| | 17 | 43768 | WAND HANDLE | 1 |
| | 18 | 45562 | HOSE GUIDE | 1 |
| | 19 | 44780 | DRIVER SIDE FENDER ASSEMBLY | 1 |
| | 20 | 52200 | ELECTRIC HEATED WAND ASSEMBLY 48” | 1 |
| | 21 | 45769 | HOSE GUARD | 1 |
| | 22 | 43842 | DRIP PAN ASSEMBLY | 1 |
| | 23 | 43732N | CAP, NON-VENTED (DIESEL TANK) | 1 |
| | 24 | 44737S | FUEL TANK ASSY 32 GAL DOT SALES | 1 |
| | 25 | 44818 | TUBING, FUEL SIGHT GAUGE | 1 |
| | 26 | 44817 | FITTING, SIGHT GAUGE ELBOW | 2 |
| | 27 | 47345N | FILTER ASSEMBLY (41867 FILTER ONLY) | 1 |
| | 28 | 29195 | ¼” BALL VALVE | 1 |

©2026 by Crafco All Rights Reserved

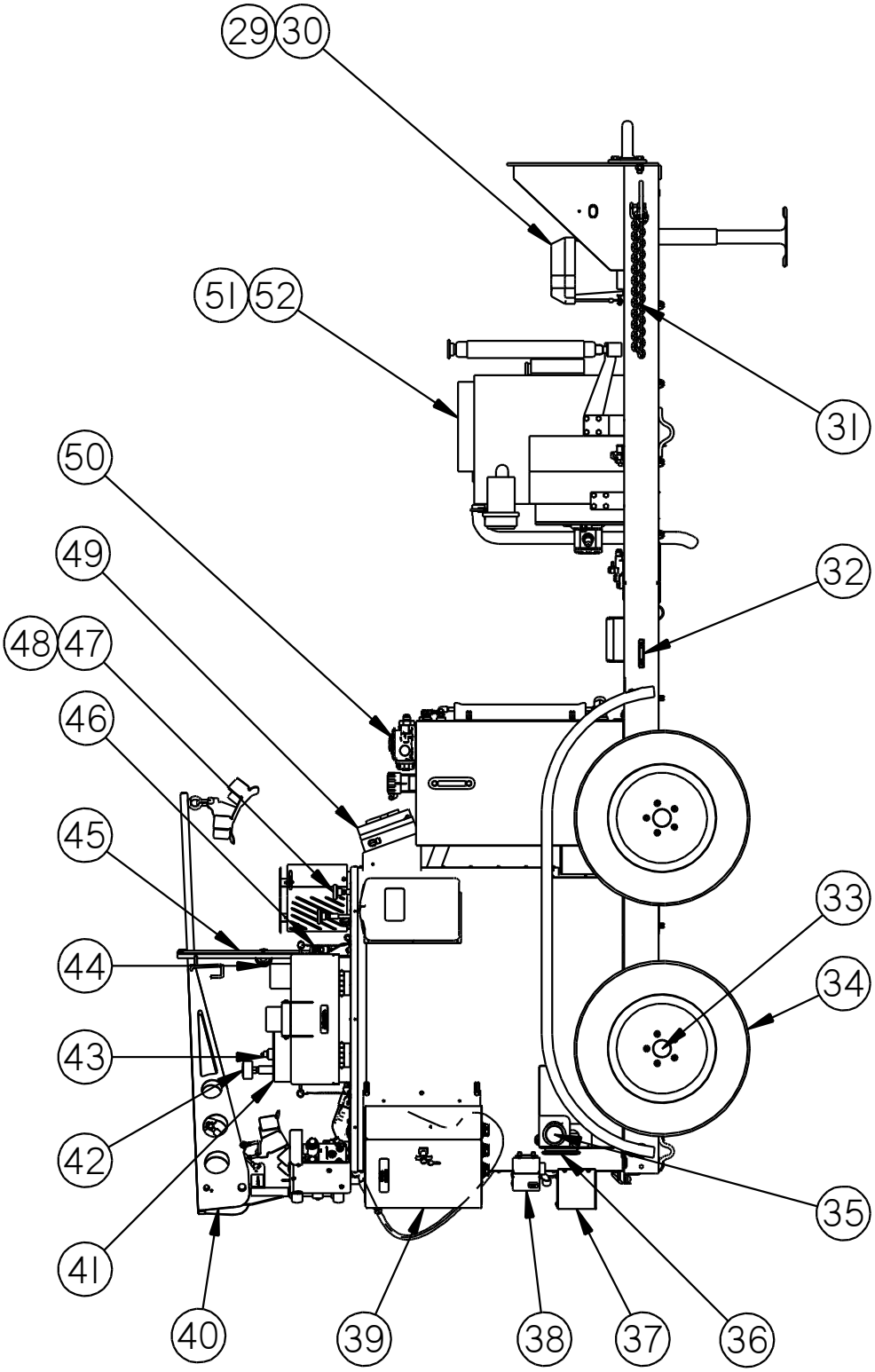


Fig. 9-8 Super Shot 125 Diesel Melter Dual Axle PN 43600DX (continued)

### Table 9-8 Super Shot 125 Diesel Melter Dual Axle PN 43600DX (continued)

| FIG. | ITEM | PART NO. | DESCRIPTION | QTY. |
|---|---|---|---|---|
| Fig. 9-8 | 29 | 24000 | 12V BATTERY | 1 |
| | 30 | 23117 | BREAKAWAY SWITCH | 1 |
| | 31 | 20130 | 48” SAFETY CHAIN | 2 |
| | 32 | 32365 | YELLOW LED CLEARANCE MARKER | 2 |
| | 33 | 43616 | TORSIONAL AXLE | 2 |
| | 34 | 44341 | TIRE AND WHEEL ASSEMBLY | 4 |
| | 35 | 32364 | 2 ½” RED LED SIDE MARKER | 2 |
| | 36 | 32363 | 4” RED LED STOP, TURN AND TAILLIGHT | 2 |
| | 37 | 43821 | HEAT GUARD | 1 |
| | 38 | 44027 | JUNCTION BOX ASSEMBLY | 1 |
| | 39 | 47250N | CONTROL BOX ASSEMBLY | 1 |
| | 40 | 52500N | BOOM ASSY, SS FLEX BOOM | 1 |
| | 41 | 43355 | OVERFLOW TANK | 1 |
| | 42 | 26025 | AIR BREATHER, HEAT TRANSFER OIL | 1 |
| | 43 | 47475N | DIP STICK, HEAT TRANSFER OIL | 1 |
| | 44 | 46306 | KNOB, THREADED BOOM, LOCK | 1 |
| | 45 | 45582 | BOOM LOCK ASSEMBLY | 1 |
| | 46 | 39608 | LID SWITCH | 1 |
| | 47 | 43465 | RTD SENSOR | 2 |
| | 48 | 51065 | CORD GRIP, RTD SENSOR | 2 |
| | 49 | 45541 | HYDRAULIC COOLER, SMALL | 1 |
| | 50 | 45430 | HYDRAULIC FILTER ASSEMBLY | 1 |
| | 50a | 45438 | HYDRAULIC FILTER ELEMENT | - |
| | 50b | 45440 | O-RING, HYDRAULIC FILTER | - |
| | 50c | 45441 | GASKET, HYDRAULIC FILTER | - |
| | 50d | 45437 | GAUGE, HYDRAULIC FILTER | - |
| | 51 | 47125N | ISUZU 3CH1 ENGINE ASSEMBLY | 1 |
| | 51 | 47125D | DEUTZ D1.2 ENGINE ASSEMBLY | 1 |
| | 52 | 29399 | ISOMOUNT (ENGINE TO FRAME NOT SHOWN) | 4 |

©2026 by Crafco All Rights Reserved

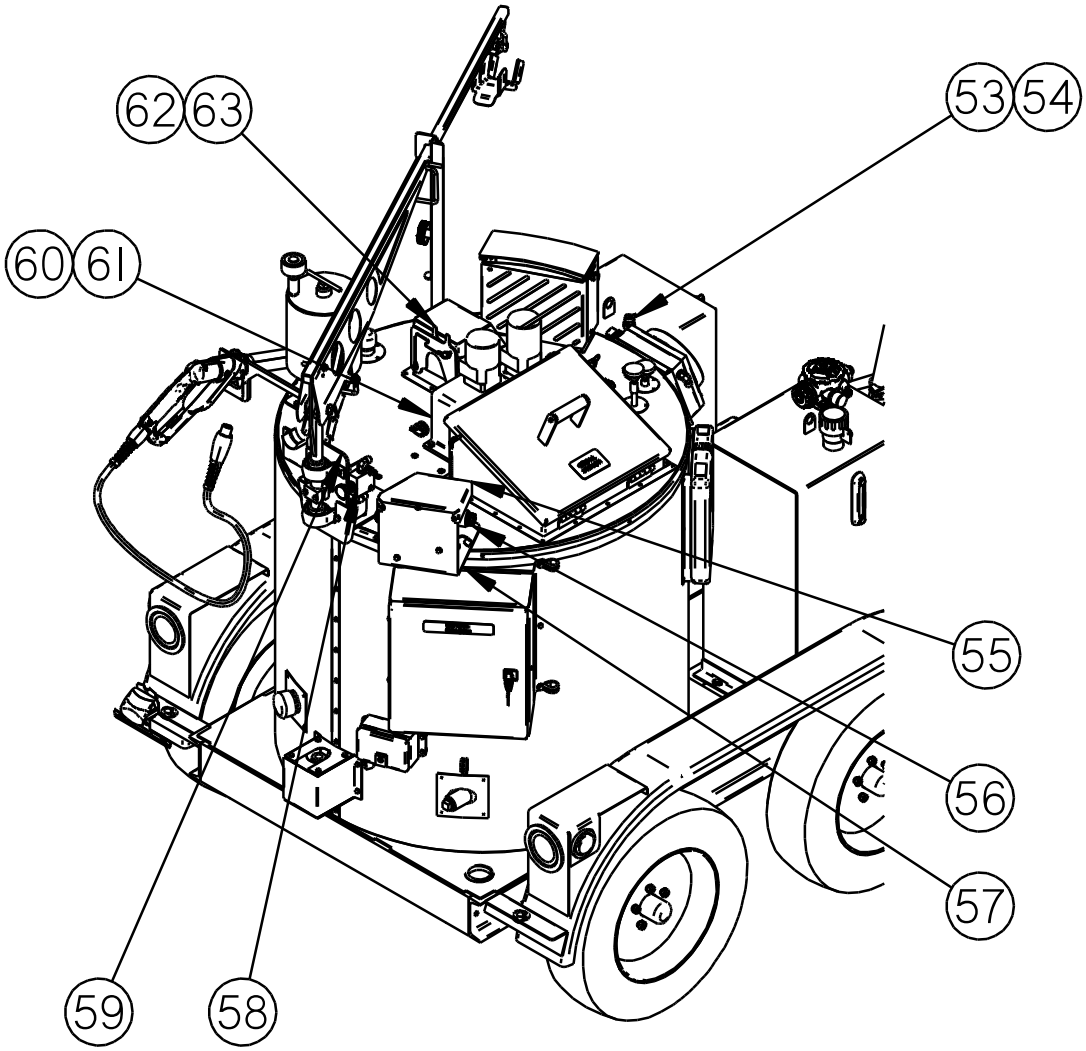


Fig. 9-9 Super Shot 125 Diesel Melter Dual Axle PN 43600DX (continued)

### Table 9-9 Super Shot 125 Diesel Melter Dual Axle PN 43600DX (continued)

| FIG. | ITEM | PART NO. | DESCRIPTION | QTY. |
|---|---|---|---|---|
| Fig. 9-9 | 53 | 43734N | SAFETY VENT | 1 |
| | 54 | 29667N | VENT TUBE (NOT SHOWN) | 1 |
| | 55 | 52535N | ANGLED COVERED, CONTROL VALVE | 1 |
| | 56 | 45420 | HYDRAULIC VALVE ASSEMBLY | 1 |
| | 57 | 52536N | MOUNT, HYDRAULIC VALVE | 1 |
| | 58 | 46060 | FLOW CONTROL VALVE | 1 |
| | 59 | 45579 | BOOM SUPPORT ASSEMBLY | 1 |
| | 60 | 44832 | PUMP / AGITATOR MOTOR ASSEMBLY | 1 |
| | 61 | 43727 | CHAIN GUARD ASSEMBLY | 2 |
| | 62 | 47247N | FULL CLOSE SHOE BOX COVER | 1 |
| | 63 | 47277N | COVER SHOE BOX ZINC PLATED | 1 |
| | 64 | 52405 | 18’ ELECTRIC HEATED HOSE (NOT SHOWN) | 1 |
| | 65 | 31512 | 30 AMP CIRCUIT BREAKER (NOT SHOWN) | 1 |

©2026 by Crafco All Rights Reserved

### 9.5 Tank Assembly, All Models

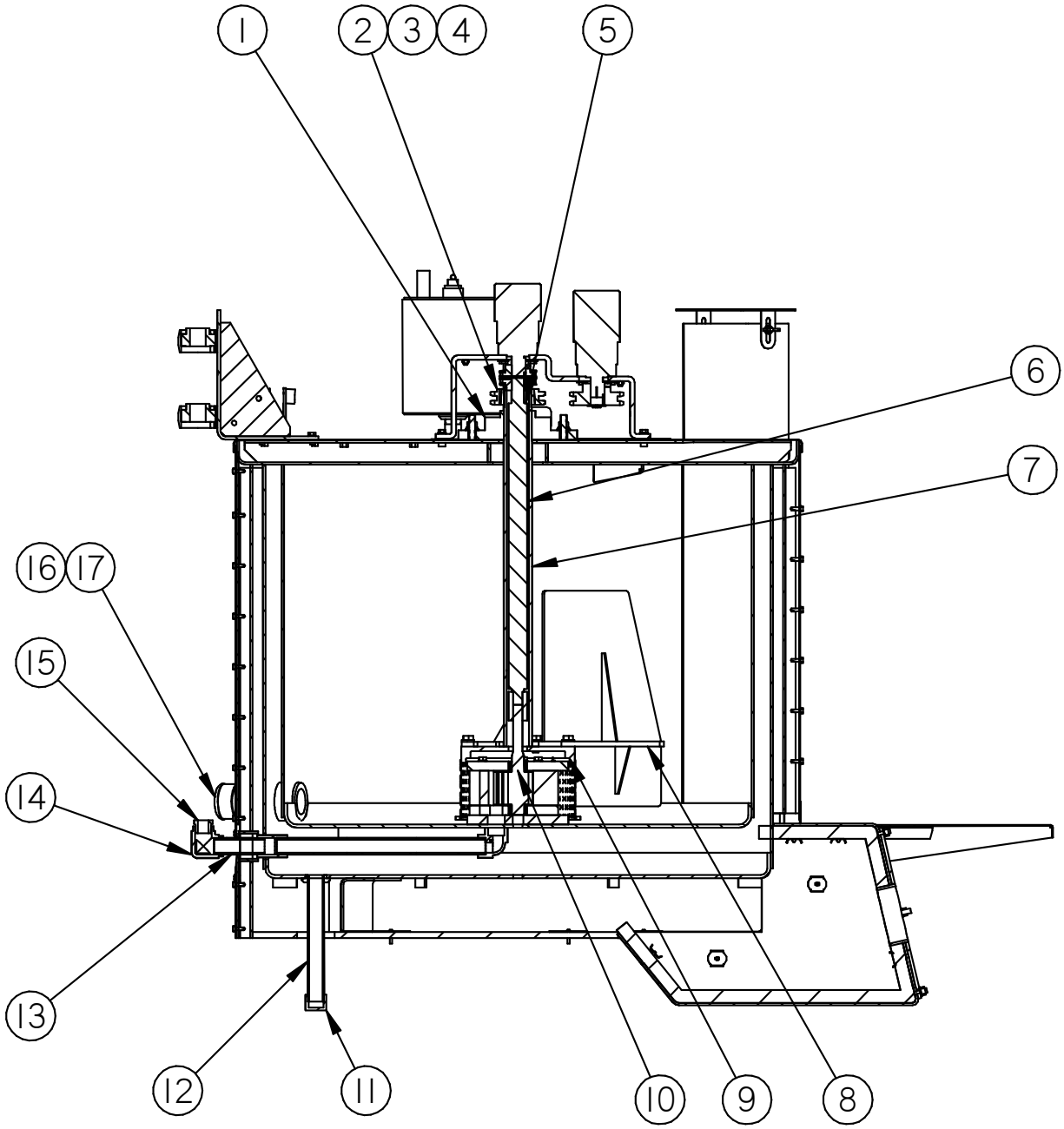


**Fig. 9-10 Tank Assembly: All Models**

### Table 9-10 Tank Assembly: All Models

| FIG. | ITEM | PART NO. | DESCRIPTION | QTY. |
|---|---|---|---|---|
| Fig. 9-10 | 1 | 43760 | BEARING, FLANGED | 1 |
| | 2 | 43321 | CHAIN DRIVE | 1 |
| | 3 | 44163 | KEY, SPROCKET | 1 |
| | 4 | 44165 | SPROCKET DRIVEN | 1 |
| | 5 | 47970N | WASHER, ALIGNMENT (PLASTIC) | 1 |
| | 6 | 43641 | SHAFT, DRIVE PUMP | 1 |
| | 7 | 43753 | SHAFT AGITATOR | 1 |
| | 8 | 43649 | PADDLE AGITATOR | 2 |
| | 9 | 43655 | SCREEN PUMP | 1 |
| | 10 | 44850 | PUMP, MATERIAL | 1 |
| | 11 | 28270 | 1” PIPE CAP | 1 |
| | 12 | 28132 | 1” X 10” LONG PIPE NIPPLE | 1 |
| | 13 | 28039 | 1” X 4” LONG PIPE NIPPLE | 1 |
| | 14 | 28210 | 1” PIPE ELBOW | 1 |
| | 15 | 28351 | 1” X ¾” REDUCER BUSHING | 1 |
| | 16 | 28046 | 2” X 4” LONG PIPE NIPPLE | 1 |
| | 17 | 28273 | 2” PIPE CAP | 1 |

©2026 by Crafco All Rights Reserved

### 9.6 Control Box Assembly: PN 47250N All Models

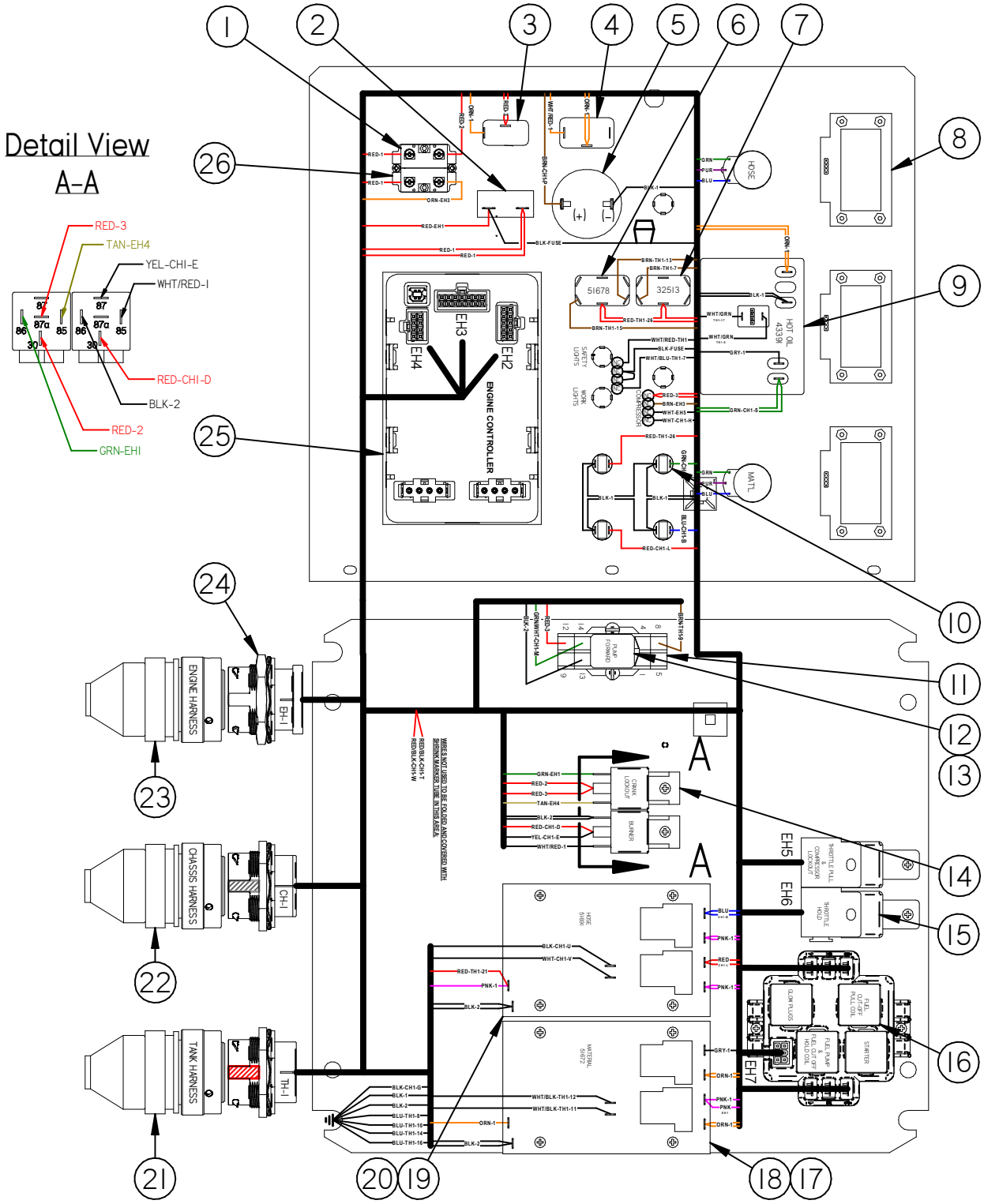


**Fig. 9-11 Control Box Assembly: PN 47250N All Models**

### Table 9-11 Control Box Assembly: PN 47250N All Models

| FIG. | ITEM | PART NO. | DESCRIPTION | QTY. |
|---|---|---|---|---|
| Fig. 9-11 | 1 | 51852 | CONTACT BLOCK, N.O. | 2 |
| | 2 | 51665 | CIRCUIT BREAKER, 15 AMP | 1 |
| | 3 | 50719 | TOGGLE SWITCH, SPST ON-OFF | 1 |
| | 4 | 52338 | TOGGLE SWITCH, SPDT ON-(ON) | 1 |
| | 5 | 46494 | ALARM, PIEZO | 1 |
| | 6 | 51678 | TOGGLE SWITCH, SPDT ON-OFF-(ON) | 1 |
| | 7 | 32513 | TOGGLE SWITCH, DPDT (ON)-OFF(ON) | 1 |
| | 8 | 50251 | DIGITAL READOUT | 3 |
| | 9 | 43391 | TEMPERATURE CONTROLLER, 150F-550F | 1 |
| | 10 | 51651 | LIGHT, 12VDC | 4 |
| | 11 | 51662 | SOCKET, RELAY | 1 |
| | 12 | 51661 | RELAY, DPDT | 1 |
| | 13 | 51663 | SPRING, RELAY HOLD DOWN | 1 |
| | 14 | 51673 | RELAY, SPDT | 2 |
| | 15 | 38101S | RELAY, MECH ENGINE HARNESS, 40/60A | 2 |
| | 16 | 38102S | RELAY, MECH ENGINE HARN, RELAY PACK | 4 |
| | 17 | 51670 | SPACER, CONTROLLER | 4 |
| | 18 | 51672 | TEMPERATURE CONTROLLER, 400F/275F | 1 |
| | 19 | 51670 | SPACER, CONTROLLER | 4 |
| | 20 | 51691 | TEMPERATURE CONTROLLER, 400F/325F | 1 |
| | 21 | 38305N | HARNESS, TANK | 1 |
| | 22 | 38205N | HARNESS, CHASSIS | 1 |
| | 23 | 45965 | HARNESS - ENGINE EXT, DEC, 100" | 1 |
| | 24 | 45954 | PANEL NUT | 3 |
| | 25 | 38090N | ENGINE CONTROLLER, D.E.C. | 1 |
| | 26 | 46239 | SWITCH, ON-OFF W/KEY (FRONT PANEL) | 1 |
| | 27 | 50593 | KNOB, TEMP CONTROL (FRONT PANEL) | 3 |
| | 28 | 38050N | ENCLOSURE, CONTROL BOX (NOT SHOWN) | 1 |
| | 29 | 51684 | RIBBON CABLE, 36” (NOT SHOWN) | 2 |
| | 30 | 51698 | RIBBON CABLE, 5” (NOT SHOWN) | 1 |

©2026 by Crafco All Rights Reserved

### 9.7 Engine Assembly: PN 47125N Isuzu Diesel

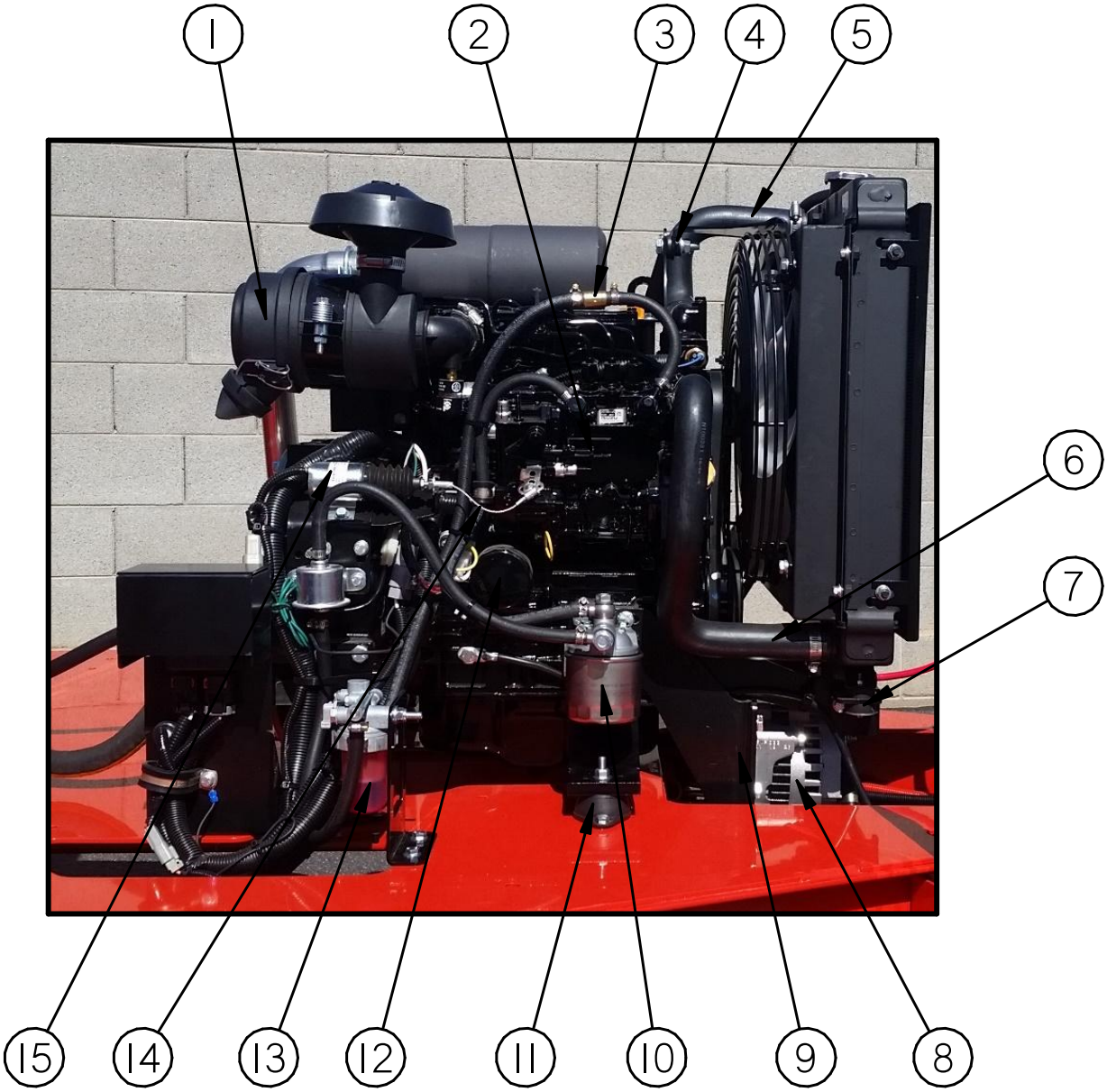


**Fig. 9-12 Engine Assembly: PN 47125N Isuzu Diesel**

### Table 9-12 Engine Assembly: PN 47125N Isuzu Diesel

| FIG. | ITEM | PART NO. | DESCRIPTION | QTY. |
|---|---|---|---|---|
| Fig. 9-12 | 1 | 45391 | AIR FILTER ELEMENT | 1 |
| | 2 | 47125N | ENGINE, 23 HP 3CH1 | 1 |
| | 3 | 47149N | VALVE – CHECK INLINE 5/16 BARB | 1 |
| | 4 | 47138N | UPPER RADIATOR ISO MOUNT | 1 |
| | 5 | 45444U | UPPER RADIATOR HOSE | 1 |
| | 6 | 45444L | LOWER RADIATOR HOSE | 1 |
| | 7 | 41872 | LOWER RADIATOR ISO MOUNT | 2 |
| | 8 | 43612 | GENERATOR. 24VAC | 1 |
| | 9 | 45748 | DRIVE BELT, GENERATOR | 1 |
| | 10 | 41867 | FUEL FILTER | 1 |
| | 11 | 29399 | ISOMOUNT | 4 |
| | 12 | 45389 | OIL FILTER | 1 |
| | 13 | 47150 | WATER SEPARATOR | 1 |
| | 14 | 38601N | THROTTLE CABLE ASSEMBLY | 1 |
| | 15 | 51849S | THROTTLE SOLENOID | 1 |
| | NS | 45402 | HYDRAULIC PUMP (NOT SHOWN) | 1 |
| | NS | 45443N | RADIATOR KIT (RADIATOR, SHROUD, FINGER GUARD, CAP, NOT SHOWN) | 1 |
| | NS | 47155N | RADIATOR OVERFLOW BOTTLE KIT (NOT SHOWN) | 1 |
| | NS | 47290N | ALTERNATOR 12V-40A (NOT SHOWN) | 1 |
| See Section: Electrical Schematic: (43600 & 57200) for Wiring Harness Info | | | | |

©2026 by Crafco All Rights Reserved

### 9.8 Hydraulic Control Valve Assembly: PN 45420 All Models

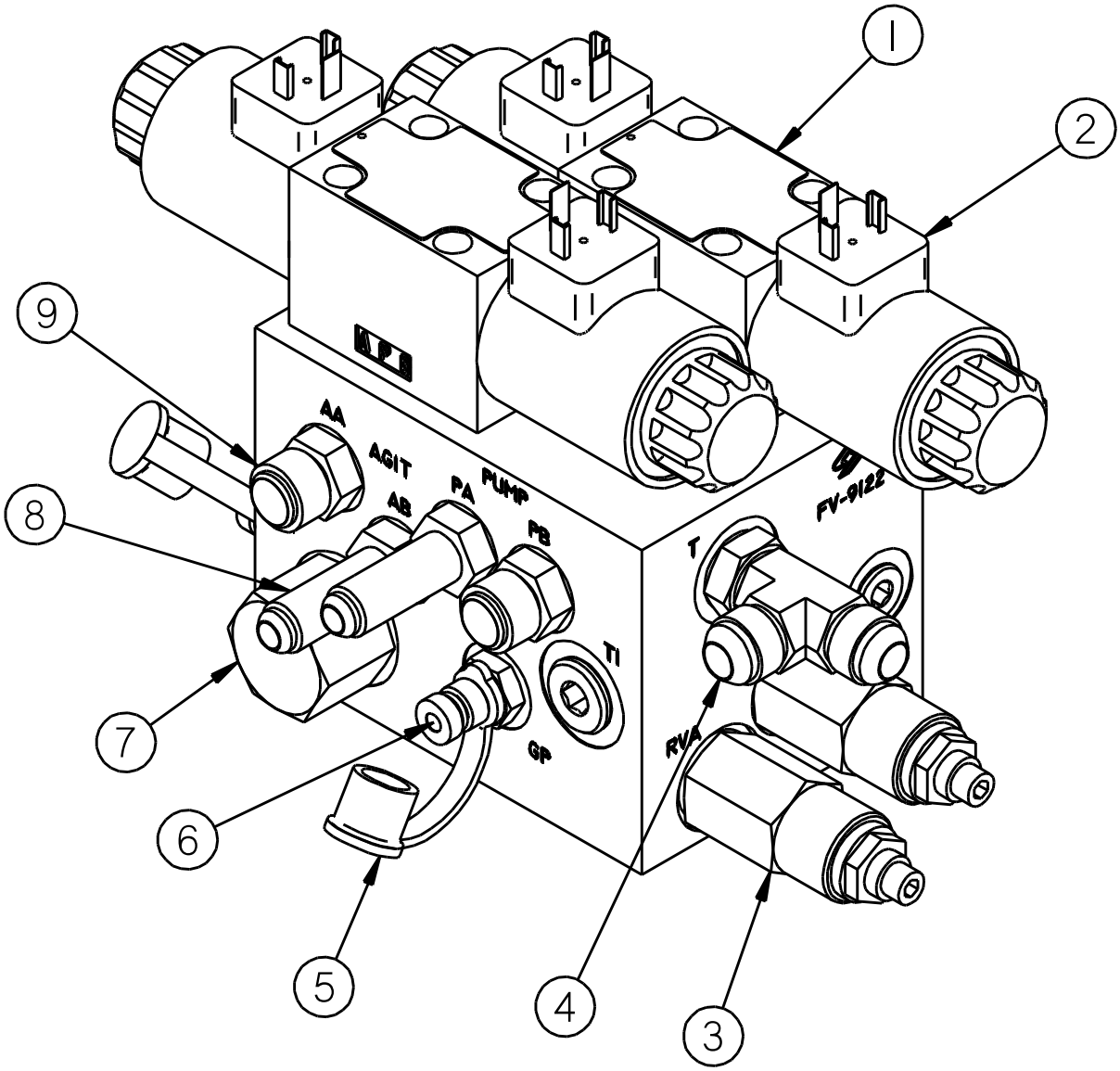


**Fig. 9-13 Hydraulic Control Valve Assembly: PN 45420 All Models**

### Table 9-13 Hydraulic Control Valve Assembly: PN 45420 All Models

| FIG. | ITEM | PART NO. | DESCRIPTION | QTY. |
|---|---|---|---|---|
| Fig. 9-13 | 1 | 45418 | VALVE, DIRECTIONAL REXROTH | 2 |
| | 2 | 45436 | COIL, DIRECTIONAL VALVE REXROTH | 4 |
| | 3 | 45417 | VALVE RELIEF | 2 |
| | 4 | 29897 | FITTING, #8 ORB X #8 MALE JIC STR | 1 |
| | 5 | 45413 | DUST CAP | 2 |
| | 6 | 45414 | FITTING, TEST PORT | 2 |
| | 7 | 45416 | FLOW CONTROL, PRIORITY | 1 |
| | 8 | 40308 | FITTING, #6 ORB X #6 MALE JIC STR | 2 |
| | 9 | 29919 | FITTING, #6 ORB X #8 MALE JIC STR | 2 |

©2026 by Crafco All Rights Reserved

### 9.9 Material Flow Control Assembly: PN 46060 All Models

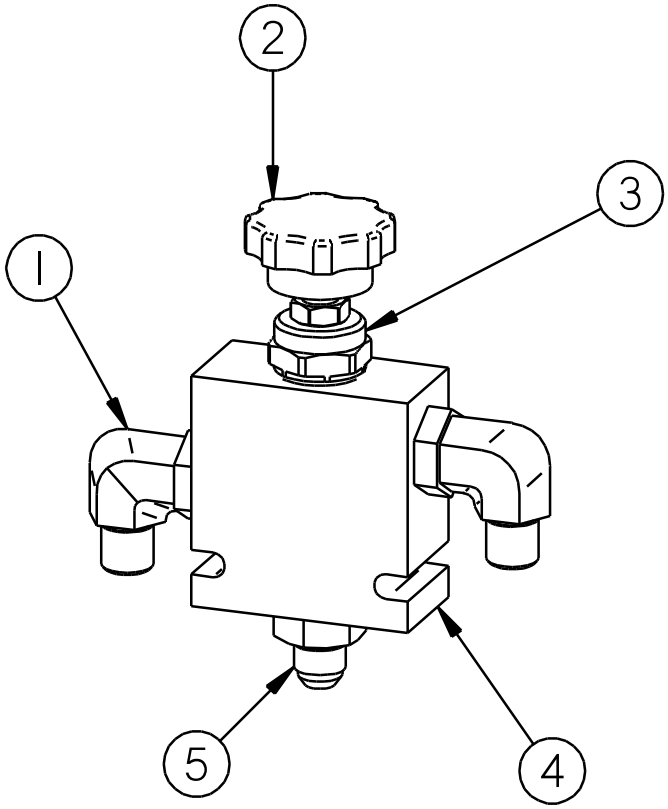


**Fig. 9-14 Material Flow Control Assembly: PN 46060 All Models**

©2026 by Crafco All Rights Reserved

### Table 9-14 Material Flow Control Assembly: PN 46060 All Models

| FIG. | ITEM | PART NO. | DESCRIPTION | QTY. |
|---|---|---|---|---|
| Fig. 9-14 | 1 | 29869 | 3/8” TUBE X 1/2” O-RING ELBOW | 2 |
| | 2 | 46077 | KNOB ONLY | 1 |
| | 3 | 45431 | CARTRIDGE, FLOW CONTROL (WITH KNOB) | 1 |
| | 4 | 46060 | HYDRAULIC FLOW CONTROL (NO FITTINGS) | 1 |
| | 5 | 29998 | 3/8” TUBE X 1/2” O-RING ADAPTOR | 1 |

©2026 by Crafco All Rights Reserved

### 9.10 Pump/Mixer Motor Assembly: PN 44832 All Models

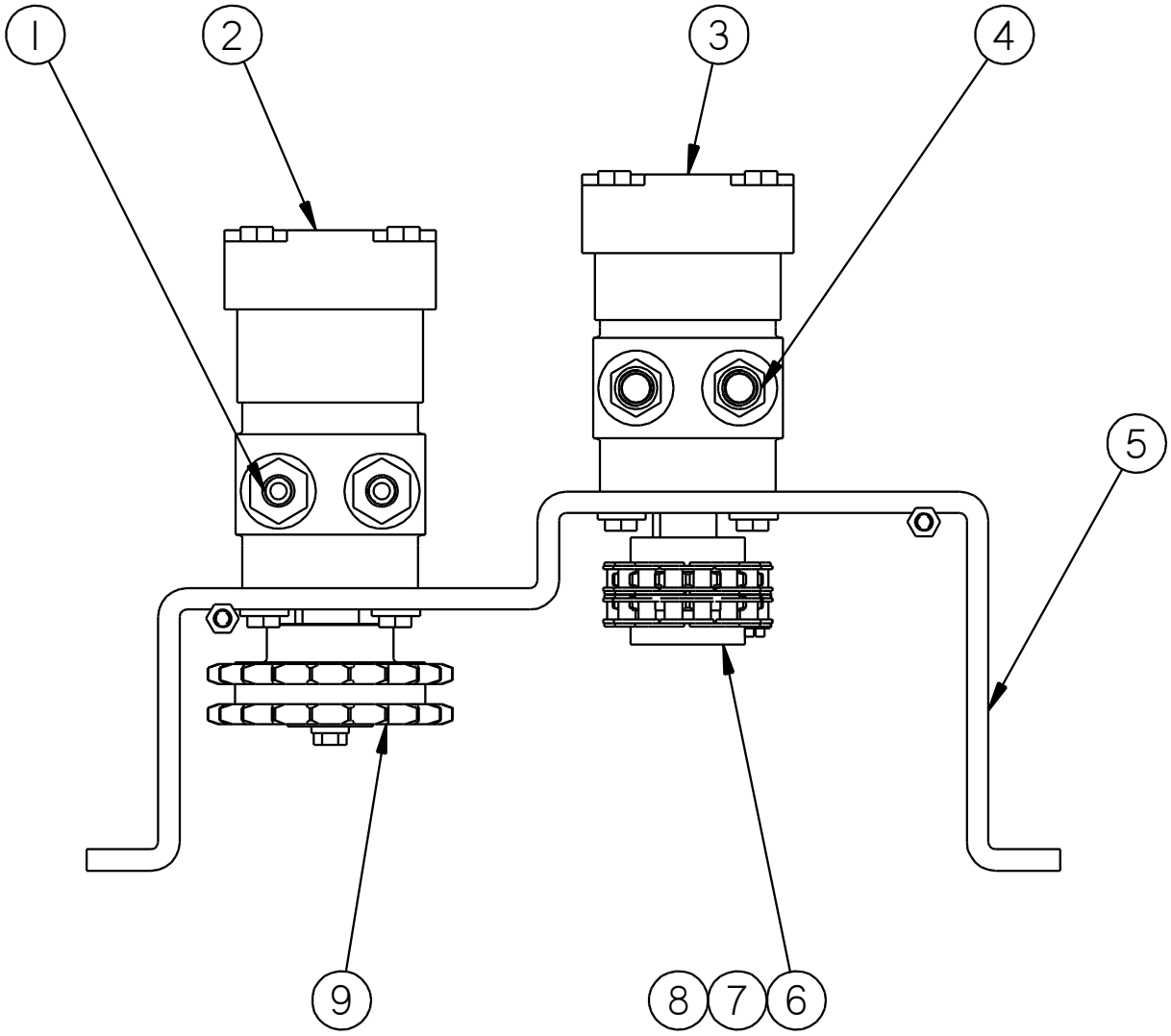


**Fig. 9-15 Pump/Mixer Motor Assembly: PN 44832 All Models**

### Table 9-15 Pump/Mixer Motor Assembly: PN 44832 All Models

| FIG. | ITEM | PART NO. | DESCRIPTION | QTY. |
|---|---|---|---|---|
| Fig. 9-15 | 1 | 22029 | 3/8” TUBE X 5/8” O-RING ADAPTOR | 2 |
| | 2 | 22027 | HYDRAULIC MOTOR, MIXER | 1 |
| | 3 | 44809 | HYDRAULIC MOTOR, PUMP | 1 |
| | 4 | 29913 | 1/2” TUBE X 5/8” O-RING ADAPTOR | 2 |
| | 5 | 43345 | MOUNTING BRACKET MOTORS | 1 |
| | 6 | 26002 | SPROCKET CHAIN COUPLING | 2 |
| | 7 | 26016 | CHAIN COUPLING | 1 |
| | 8 | 26030 | CONNECTING LINK CHAIN | 1 |
| | 9 | 43323 | SPROCKET MIXER DRIVE | 1 |

©2026 by Crafco All Rights Reserved

### 9.11 Diesel Burner Assembly: PN 46380 All Models

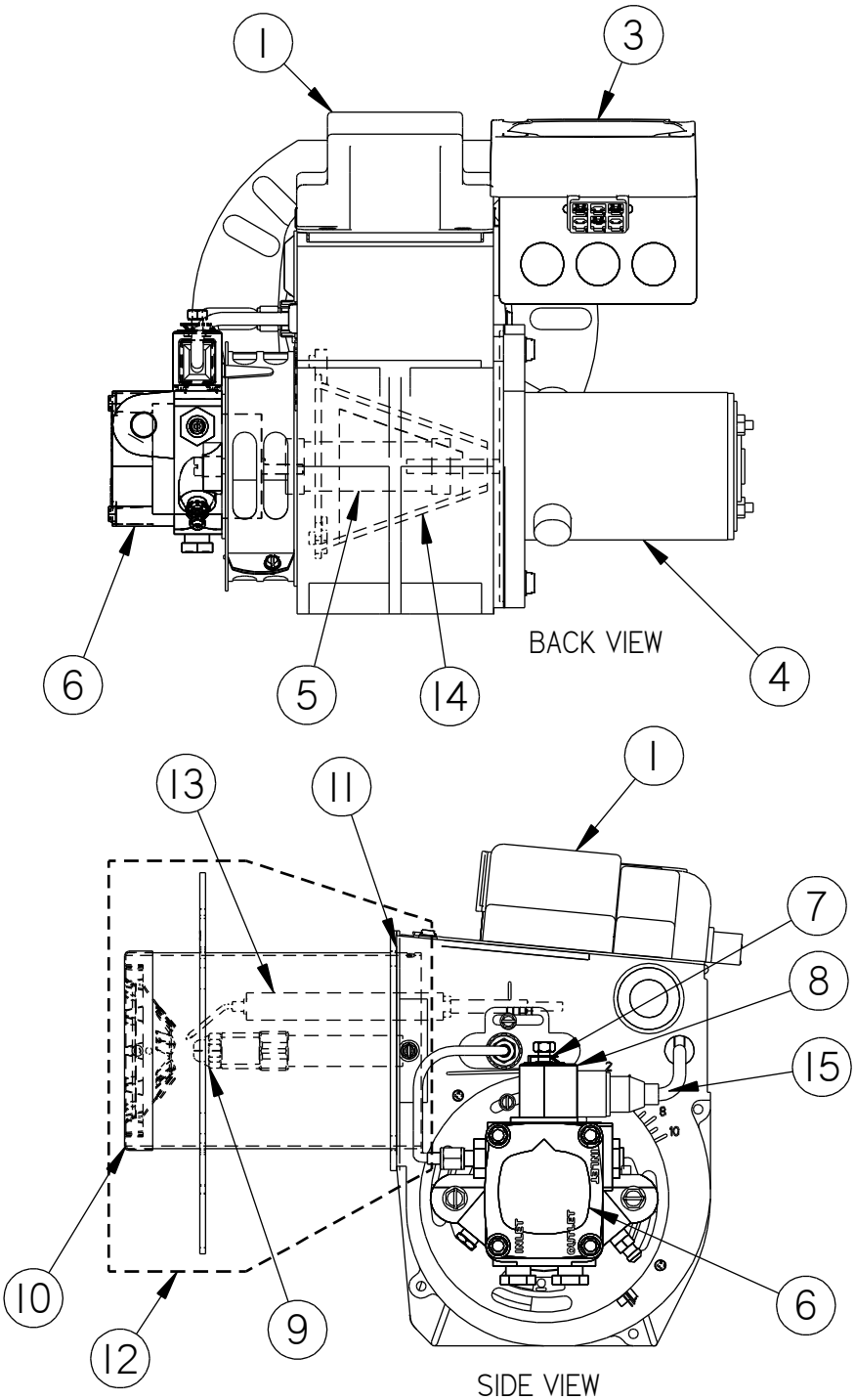


**Fig. 9-16 Diesel Burner Assembly: PN 46380 All Models**

### Table 9-16 Diesel Burner Assembly: PN 46380 All Models

| FIG. | ITEM | PART NO. | DESCRIPTION | QTY. |
|---|---|---|---|---|
| Fig. 9-16 | 1 | 41949 | IGNITION TRANSFORMER | 1 |
| | 2 | 41870 | CAD EYE (NOT SHOWN) | 1 |
| | 3 | 42335 | DC CONTROLLER | 1 |
| | 4 | 41890 | BLOWER MOTOR | 1 |
| | 5 | 41970 | COUPLING, FUEL PUMP | 1 |
| | 6 | 41892 | PUMP, FUEL | 1 |
| | 7 | 41932 | VALVE STEM, FUEL SOLENOID | 1 |
| | 8 | 41933 | COIL, FUEL SOLENOID | 1 |
| | 9 | 41883 | NOZZLE 1.5X80B | 1 |
| | 10 | 41953N | STD HEAD, F22, BURNER | 1 |
| | 11 | 41964N | GASKET, AIR TUBE TO HOUSING | 1 |
| | 12 | 46381N | AIR TUBE W/ HEAD & ELECTRODE MOUNT | 1 |
| | 13 | 41993 | ELECTRODE ASSY (COMES WITH 2) | 1 |
| | 14 | 41966N | AIR GUIDE, BURNER | 1 |
| | 15 | 41894N | CORD SET | 1 |

©2026 by Crafco All Rights Reserved

### 9.12 Hydraulic Diagram: PN 26554 (43600 & 57200)

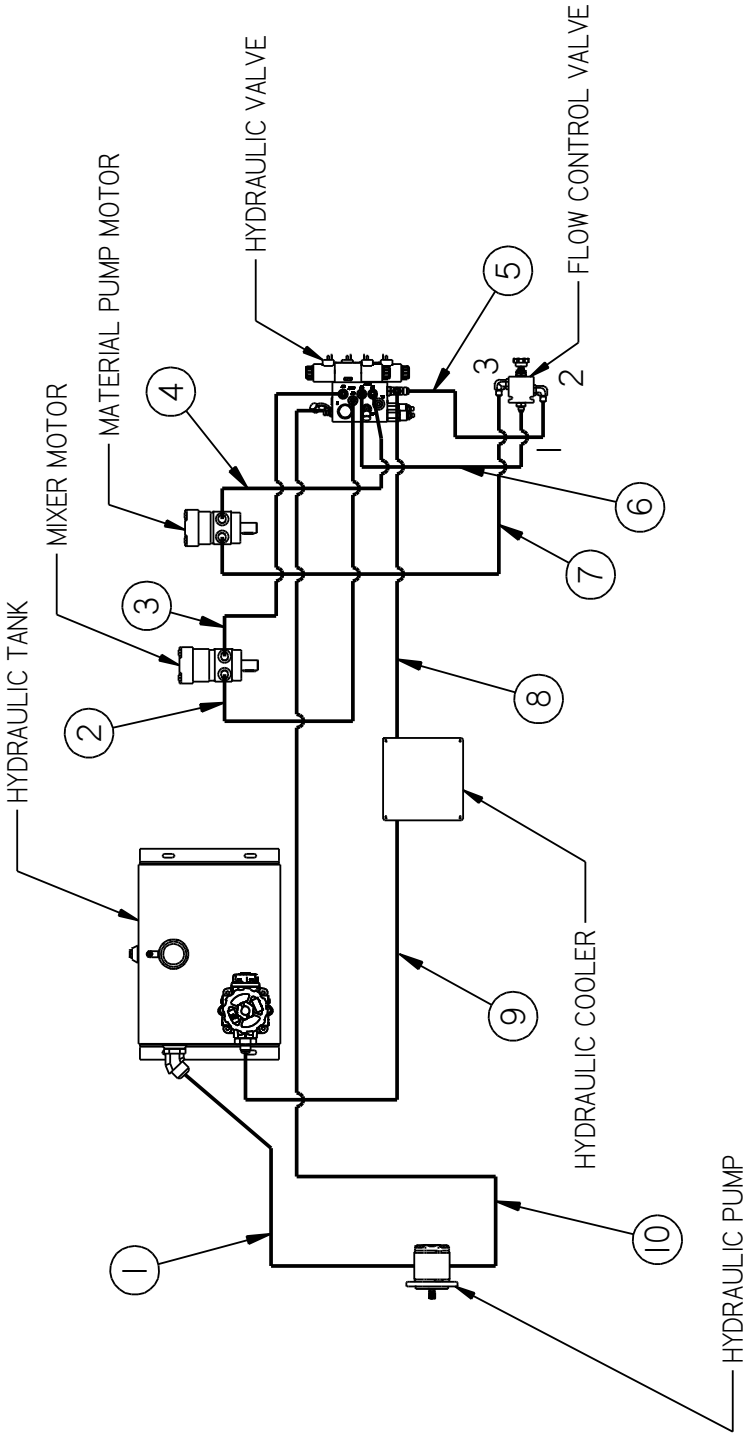


Fig. 9-17 Hydraulic Diagram: PN 26554 (43600 & 57200)

### Table 9-17 Hydraulic Diagram: PN 26554 (43600 & 57200)

| FIG. | ITEM | PART NO. | DESCRIPTION | QTY |
|---|---|---|---|---|
| Fig. 9-17 | 1 | **HYDRAULIC RESERVOIR TO HYDRAULIC PUMP SUCTION PORT** | | |
| | | 29898 | FITTING, #20 ORB X #16 JIC 45° | REF |
| | | 12G4H 12G-16FJX 12G-12FJX 20 | HYDRAULIC HOSE | 1 |
| | | 29802 | FITTING, #12 ORB X #12 JIC 45° | REF |
| | 2 | **MIXER MOTOR TO HYDRAULIC VALVE “AB” PORT** | | |
| | | 22029 | FITTING, #10 ORB X #6 JIC | REF |
| | | 6M3K 6G-6FJX 6G-6FJX90L 36 | HYDRAULIC HOSE | 1 |
| | | 40311 | FITTING, #6 ORB X #6 JIC | REF |
| | 3 | **HYDRAULIC VALVE “AA” PORT TO MIXER MOTOR** | | |
| | | 29919 | FITTING, #6 ORB X #8 JIC | REF |
| | | 6M3K 6G-8FJX 6G-6FJX90S 34 | HYDRAULIC HOSE | 1 |
| | | 22029 | FITTING, #10 ORB X #6 JIC | REF |
| | 4 | **HYDRAULIC VALVE “PB” PORT TO MATERIAL PUMP MOTOR** | | |
| | | 29919 | FITTING, #6 ORB X #8 JIC | REF |
| | | 8M3K 8G-8FJX 8G-8FJX90S 28 | HYDRAULIC HOSE | 1 |
| | | 29913 | FITTING, #10 ORB X #8 JIC | REF |
| | 5 | **FLOW CONTROL VALVE “2” TO HYDRAULIC VALVE “T” PORT** | | |
| | | 29896 | FITTING, #8 ORB X #8 JIC ELBOW | REF |
| | | 8M3K 8G-8FJX 8G-8FJX90S 22 | HYDRAULIC HOSE | 1 |
| | | 29932 | FITTING, #8 ORB X #8 JIC RUN TEE | REF |
| | 6 | **FLOW CONTROL VALVE “1” TO HYDRAULIC VALVE “PA”PORT** | | |
| | | 29998 | FITTING, #8 ORB X #8 JIC | REF |
| | | 8M3K 8G-8FJX 8G-6FJX 16 | HYDRAULIC HOSE | 1 |
| | | 40311 | FITTING, #6 ORB X #6 JIC | REF |

©2026 by Crafco All Rights Reserved

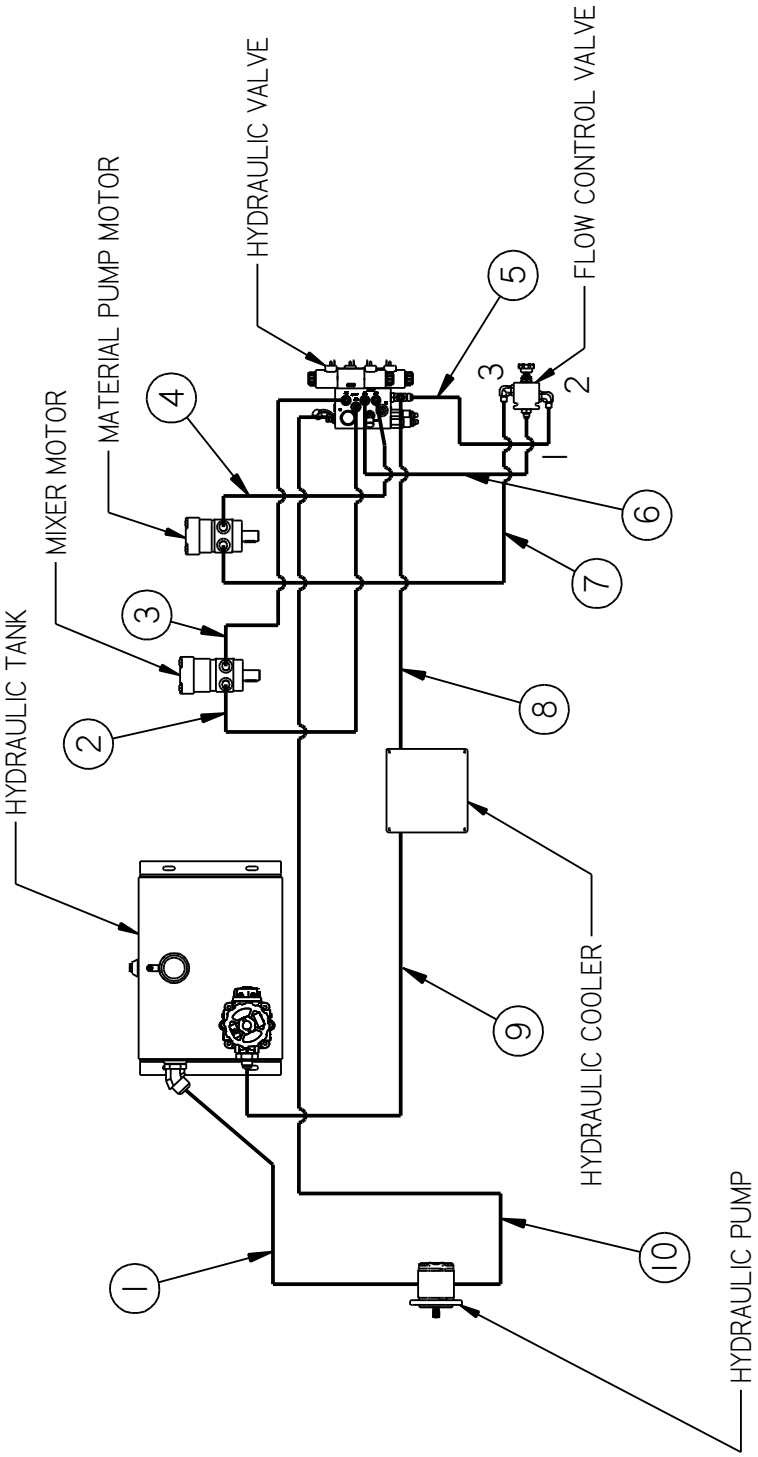


**Fig. 9-18 Hydraulic Diagram: PN 26554 (43600 & 57200 continued)**

### Table 9-18 Hydraulic Diagram: PN 26554 (43600 & 57200 continued)

| FIG. | ITEM | PART NO. | DESCRIPTION | QTY |
|---|---|---|---|---|
| Fig. 9-18 | **7** | **FLOW CONTROL VALVE "3" TO MATERIAL PUMP MOTOR** | | |
| | | 29896 | FITTING, #8 ORB X #8 JIC ELBOW | REF |
| | | 8M3K 8G-8FJX 8G-8FJX90L 30 | HYDRAULIC HOSE | 1 |
| | | 29913 | FITTING, #10 ORB X #8 JIC | REF |
| | **8** | **HYDRAULIC VALVE "T" PORT TO HYDRAULIC COOLER** | | |
| | | 29932 | FITTING, #8 ORB X #8 JIC RUN TEE | REF |
| | | 8M3K 8G-8FJX 8G-12FJX 60 | HYDRAULIC HOSE | 1 |
| | | 29916 | FITTING, #12 ORB X #12 JIC ELBOW | REF |
| | **9** | **HYDRAULIC COOLER TO HYDRAULIC FILTER RETURN** | | |
| | | 29916 | FITTING, #12 ORB X #12 JIC ELBOW | REF |
| | | 12M3K 12G-12FJX 12G-12FJX90S 38 | HYDRAULIC HOSE | 1 |
| | | 29929 | FITTING, #16 ORB X #12 JIC | REF |
| | **10** | **HYDRAULIC PUMP PRESSURE PORT TO HYDRAULIC VALVE "P" PORT** | | |
| | | 29862 | FITTING, #10 ORB X #10 JIC | REF |
| | | 8M3K 8G-10FJX 8G-8FJX90L 110 | HYDRAULIC HOSE | 1 |
| | | 29897 | FITTING, #8 ORB X #8 JIC | REF |

©2026 by Crafco All Rights Reserved

### 9.13 Hydraulic Diagram: PN 26554DX (43600DX)

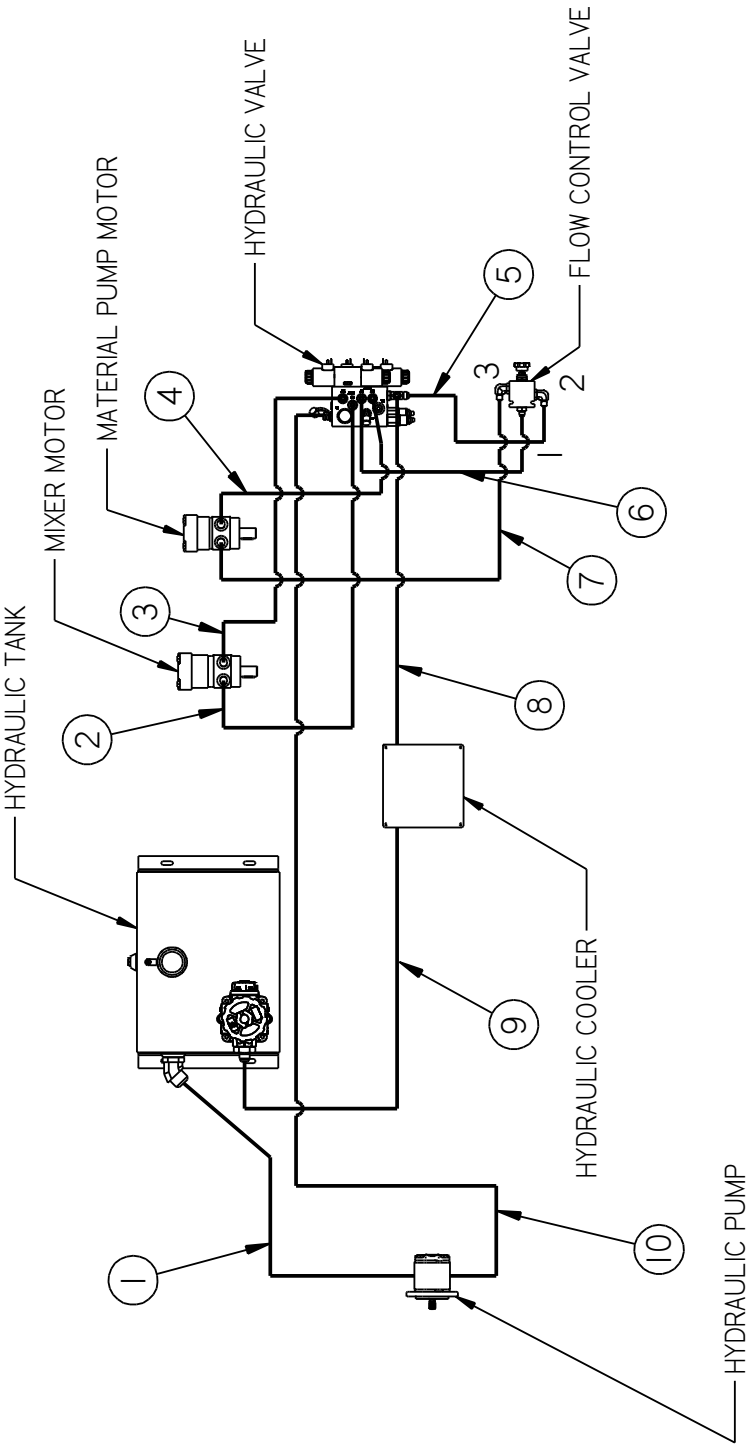


**Fig. 9-19 Hydraulic Diagram: PN 26554DX (43600DX)**

©2026 by Crafco All Rights Reserved

### Table 9-19 Hydraulic Diagram: PN 26554DX (43600DX)

| FIG. | ITEM | PART NO. | DESCRIPTION | QTY |
|---|---|---|---|---|
| Fig. 9-19 | 1 | **HYDRAULIC RESERVOIR TO HYDRAULIC PUMP SUCTION PORT** | | |
| | | 29898 | FITTING, #20 ORB X #16 JIC 45° | REF |
| | | 12G4H 12G-16FJX 12G-12FJX 32 | HYDRAULIC HOSE | 1 |
| | | 29802 | FITTING, #12 ORB X #12 JIC 45° | REF |
| | 2 | **MIXER MOTOR TO HYDRAULIC VALVE “AB” PORT** | | |
| | | 22029 | FITTING, #10 ORB X #6 JIC | REF |
| | | 6M3K 6G-6FJX 6G-6FJX90L 36 | HYDRAULIC HOSE | 1 |
| | | 40311 | FITTING, #6 ORB X #6 JIC | REF |
| | 3 | **HYDRAULIC VALVE “AA” PORT TO MIXER MOTOR** | | |
| | | 29919 | FITTING, #6 ORB X #8 JIC | REF |
| | | 6M3K 6G-8FJX 6G-6FJX90S 34 | HYDRAULIC HOSE | 1 |
| | | 22029 | FITTING, #10 ORB X #6 JIC | REF |
| | 4 | **HYDRAULIC VALVE “PB” PORT TO MATERIAL PUMP MOTOR** | | |
| | | 29919 | FITTING, #6 ORB X #8 JIC | REF |
| | | 8M3K 8G-8FJX 8G-8FJX90S 28 | HYDRAULIC HOSE | 1 |
| | | 29913 | FITTING, #10 ORB X #8 JIC | REF |
| | 5 | **FLOW CONTROL VALVE “2” TO HYDRAULIC VALVE “T” PORT** | | |
| | | 29896 | FITTING, #8 ORB X #8 JIC ELBOW | REF |
| | | 8M3K 8G-8FJX 8G-8FJX90S 22 | HYDRAULIC HOSE | 1 |
| | | 29932 | FITTING, #8 ORB X #8 JIC RUN TEE | REF |
| | 6 | **FLOW CONTROL VALVE “1” TO HYDRAULIC VALVE “PA”PORT** | | |
| | | 29998 | FITTING, #8 ORB X #8 JIC | REF |
| | | 8M3K 8G-8FJX 8G-6FJX 16 | HYDRAULIC HOSE | 1 |
| | | 40311 | FITTING, #6 ORB X #6 JIC | REF |

©2026 by Crafco All Rights Reserved

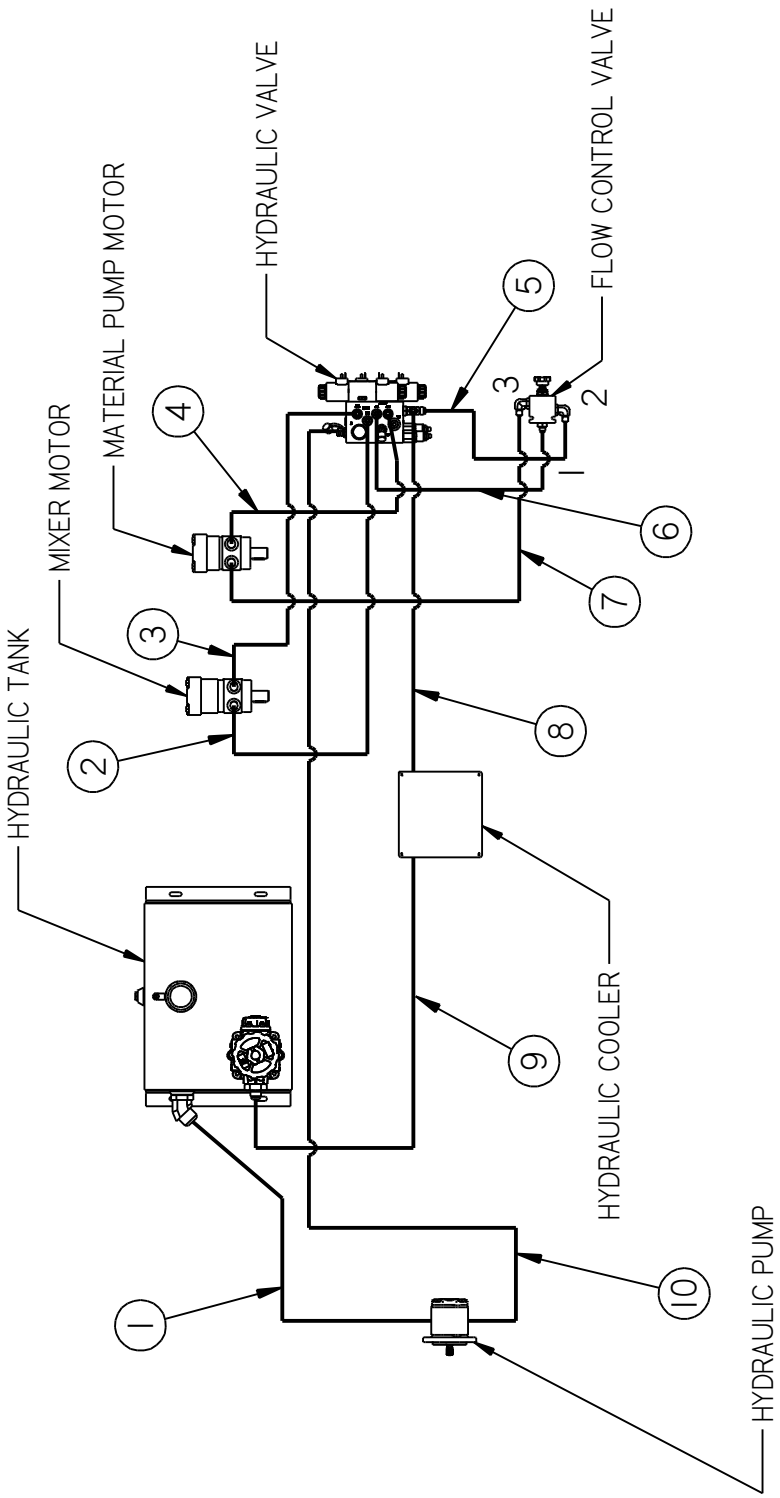


**Fig. 9-20 Hydraulic Diagram: PN 26554DX (43600DX continued)**

### Table 9-20 Hydraulic Diagram: PN 26554DX (43600DX continued)

| FIG. | ITEM | PART NO. | DESCRIPTION | QTY |
|---|---|---|---|---|
| Fig. 9-20 | **7** | **FLOW CONTROL VALVE "3" TO MATERIAL PUMP MOTOR** | | |
| | | 29896 | FITTING, #8 ORB X #8 JIC ELBOW | REF |
| | | 8M3K 8G-8FJX 8G-8FJX90L 30 | HYDRAULIC HOSE | 1 |
| | | 29913 | FITTING, #10 ORB X #8 JIC | REF |
| | **8** | **HYDRAULIC VALVE "T" PORT TO HYDRAULIC COOLER** | | |
| | | 29932 | FITTING, #8 ORB X #8 JIC RUN TEE | REF |
| | | 8M3K 8G-8FJX 8G-12FJX 60 | HYDRAULIC HOSE | 1 |
| | | 29916 | FITTING, #12 ORB X #12 JIC ELBOW | REF |
| | **9** | **HYDRAULIC COOLER TO HYDRAULIC FILTER RETURN** | | |
| | | 29916 | FITTING, #12 ORB X #12 JIC ELBOW | REF |
| | | 12M3K 12G-12FJX 12G-12FJX90S 38 | HYDRAULIC HOSE | 1 |
| | | 29929 | FITTING, #16 ORB X #12 JIC | REF |
| | **10** | **HYDRAULIC PUMP PRESSURE PORT TO HYDRAULIC VALVE "P" PORT** | | |
| | | 29862 | FITTING, #10 ORB X #10 JIC | REF |
| | | 8M3K 8G-10FJX 8G-8FJX90L 130 | HYDRAULIC HOSE | 1 |
| | | 29897 | FITTING, #8 ORB X #8 JIC | REF |

©2026 by Crafco All Rights Reserved

### 9.14 Diesel Fuel Line Schematic (43600 & 57200)

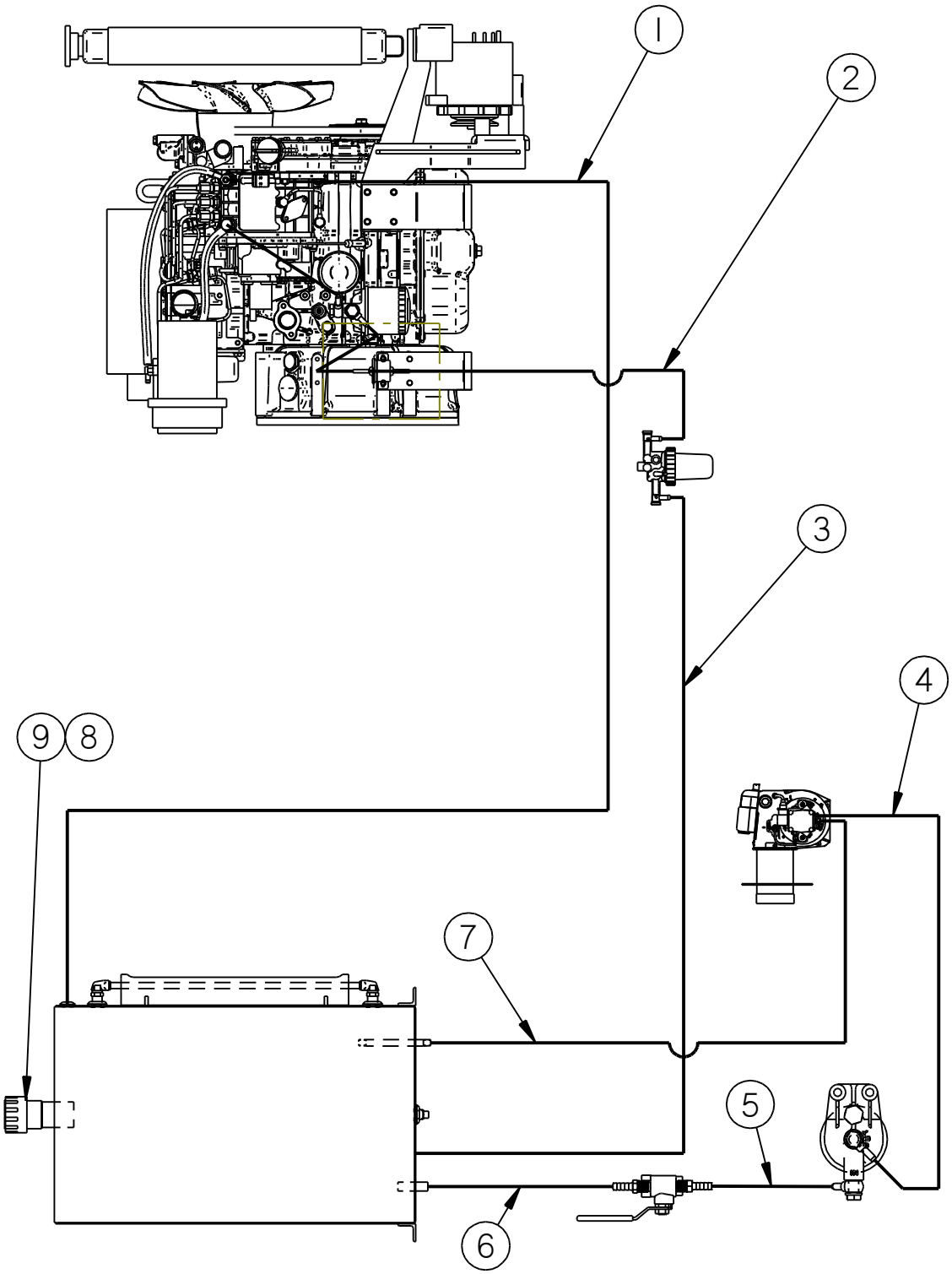


Fig. 9-21 Diesel Fuel Line Schematic (43600 & 57200)

©2026 by Crafco All Rights Reserved

### Table 9-21 Diesel Fuel Line Schematic (43600 & 57200)

| FIG. | ITEM | PART NO. | DESCRIPTION | QTY. |
|---|---|---|---|---|
| Fig. 9-21 | **1. ENGINE RETURN LINE TO DIESEL FUEL TANK** | | | |
| | | - | ENG INJECTOR. HOUSING, #6 HOSE PUSH-ON | REF. |
| | | - | HOSE, 5/16 | REF. |
| | | 47149N | VALVE -CHECK INLINE 5/16 BARB | 1 |
| | | 47663N | HOSE, 5/16 x 110” FUEL LINE | 1 |
| | | 26767 | FITTING, #5 HOSE PUSH-ON | 1 |
| | | 26782 | FITTING, 1/4” MPT X 5/16 JIC ELBOW | 1 |
| | | 26080 | CLAMP, GEAR | 2 |
| | **2. WATER SEPARATOR FUEL LINE TO LIFT PUMP** | | | |
| | | - | WATER SEP. HOUSING, #6 HOSE PUSH-ON | REF. |
| | | - | HOSE, 5/16 x FUEL LINE | 1 |
| | | - | LIFT PUMP. HOUSING, #6 HOSE PUSH-ON | REF. |
| | | 26080 | CLAMP, GEAR | 2 |
| | **3. DIESEL FUEL TANK TO WATER SEPARATOR** | | | |
| | | 26782 | FITTING, 1/4” MPT X 5/16 JIC ELBOW | 1 |
| | | 26767 | FITTING, #5 HOSE PUSH-ON | 1 |
| | | 29665N | HOSE, 5/16 x 75” FUEL LINE | 1 |
| | | - | WATER SEP. HOUSING, #6 HOSE PUSH-ON | REF. |
| | **4. BURNER FUEL FILTER TO BURNER INLET** | | | |
| | | - | BANJO FITTING | REF. |
| | | 47232N | HOSE ASSEMBLY, 5/16 X 60” FUEL LINE | 1 |
| | | 26767 | FITTING, #5 HOSE PUSH-ON | 1 |
| | | 26756N | ADAPTER, 5/16 JIC X 1/4NPT | 1 |

©2026 by Crafco All Rights Reserved

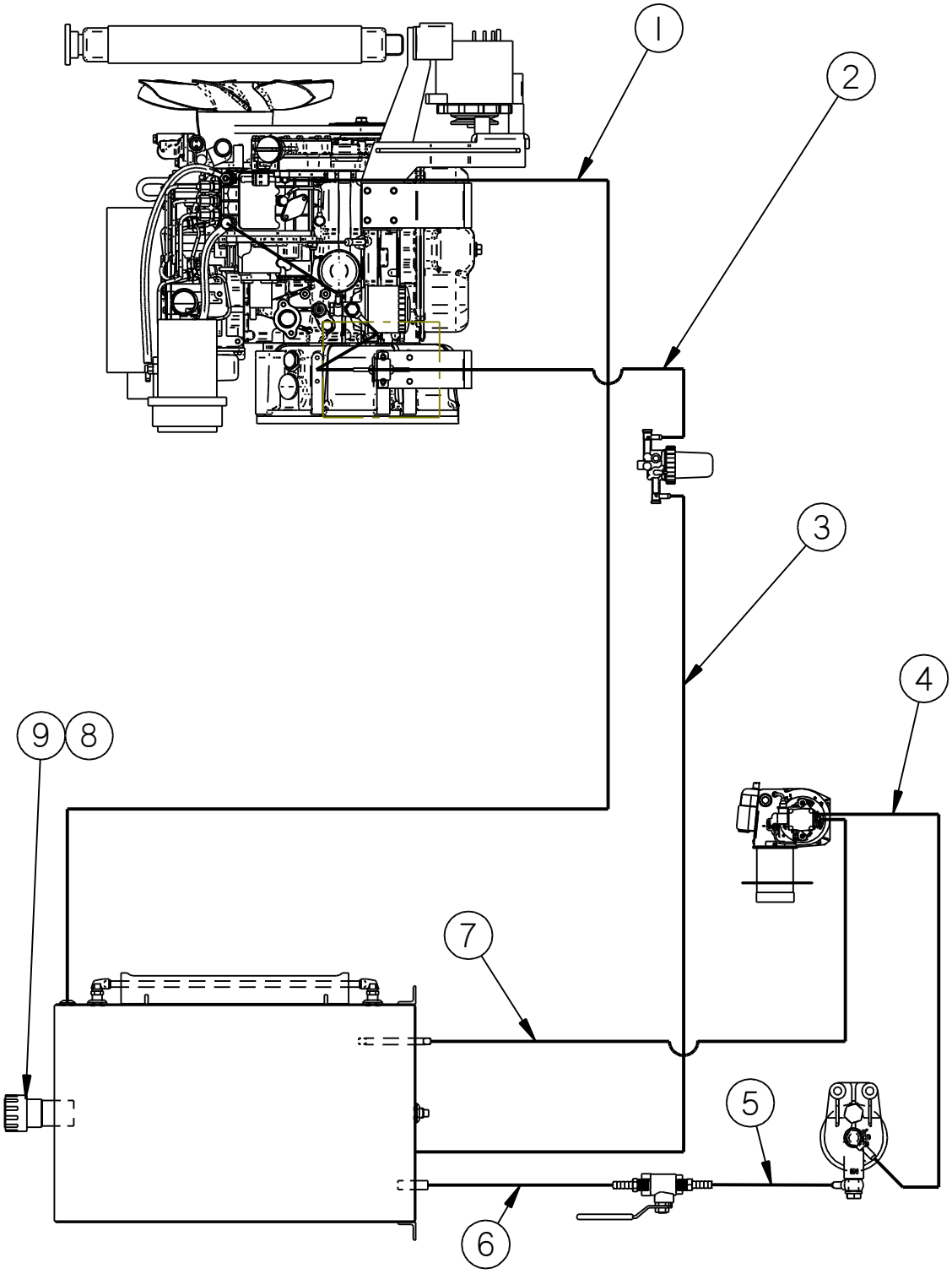


Fig. 9-22 Diesel Fuel Line Schematic (43600 & 57200 continued)

### Table 9-22 Diesel Fuel Line Schematic (43600 & 57200 continued)

| FIG. | ITEM | PART NO. | DESCRIPTION | QTY. |
|---|---|---|---|---|
| Fig. 9-22 | **5. BALL VALVE TO BURNER FUEL FILTER** | | | |
| | | 29984 | HOSE BARB, 1/4MPT X 5/16 HOSE | 1 |
| | | 29648N | HOSE ASSEMBLY, 5/16 X 10” FUEL LINE | 1 |
| | | 47345N | FILTER ASSEMBLY | 1 |
| | 6. **DIESEL TANK TO BALL VALVE** | | | |
| | | 26782 | FITTING, 1/4” MPT X 5/16 JIC ELBOW | 1 |
| | | 26767 | FITTING, #5 HOSE PUSH-ON | 1 |
| | | 29651N | HOSE ASSEMBLY, 5/16 X 67” FUEL LINE | 1 |
| | | 29984 | HOSE BARB, 1/4MPT X 5/16 HOSE | 1 |
| | 7. **BURNER RETURN TO DIESEL TANK** | | | |
| | | 26756N | ADAPTER, 5/16 JIC X 1/4NPT | 1 |
| | | 26767 | FITTING, #5 HOSE PUSH-ON | 1 |
| | | 29666N | HOSE ASSEMBLY, 5/16 X 27” FUEL LINE | 1 |
| | | 26767 | FITTING, #5 HOSE PUSH-ON | 1 |
| | | 47497N | ¼ FEMALE NPT X 5/16 JIC ELBOW | 1 |
| | 8 | 43758N | FILLER CAP, RPLCMNT, FUEL-HYD TANKS | 1 |
| | 9 | 43723N | GASKET, NARROW STYLE, FOR FILLER CAP | 1 |

©2026 by Crafco All Rights Reserved

### 9.15 Diesel Fuel Line Schematic – (43600DX)

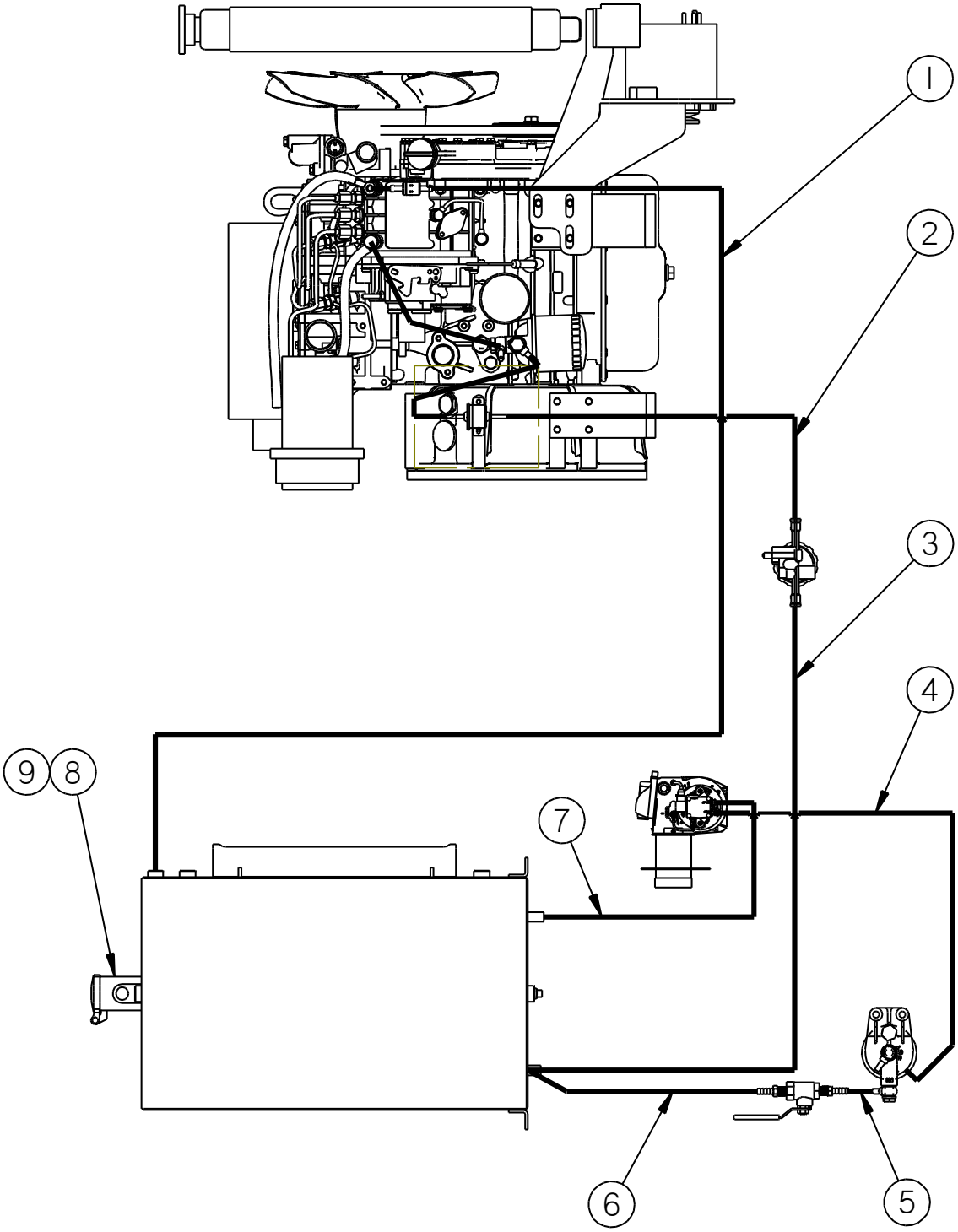


Fig. 9-23 Diesel Fuel Line Schematic – (43600DX)

## Table 9-23 Diesel Fuel Line Schematic – (43600DX)

| FIG. | ITEM | PART NO. | DESCRIPTION | QTY. |
|---|---|---|---|---|
| Fig. 9-23 | **1. ENGINE RETURN LINE TO DIESEL FUEL TANK** | | | |
| | | - | ENG INJECTOR. HOUSING, #6 HOSE PUSH-ON | REF. |
| | | - | HOSE, 5/16 | REF. |
| | | 47149N | VALVE -CHECK INLINE 5/16 BARB | 1 |
| | | 47965N | HOSE, 5/16 x 137” FUEL LINE | 1 |
| | | 26767 | FITTING, #5 HOSE PUSH-ON | 1 |
| | | 26782 | FITTING, 1/4” MPT X 5/16 JIC ELBOW | 1 |
| | | 26080 | CLAMP, GEAR | 2 |
| | **2. WATER SEPARATOR FUEL LINE TO LIFT PUMP** | | | |
| | | - | WATER SEP. HOUSING, #6 HOSE PUSH-ON | REF. |
| | | - | HOSE, 5/16 x FUEL LINE | 1 |
| | | - | LIFT PUMP. HOUSING, #6 HOSE PUSH-ON | REF. |
| | | 26080 | CLAMP, GEAR | 2 |
| | **3. DIESEL FUEL TANK TO WATER SEPARATOR** | | | |
| | | 26782 | FITTING, 1/4” MPT X 5/16 JIC ELBOW | 1 |
| | | 26767 | FITTING, #5 HOSE PUSH-ON | 1 |
| | | 47662N | HOSE, 5/16 x 92” FUEL LINE | 1 |
| | | - | WATER SEP. HOUSING, #6 HOSE PUSH-ON | REF. |
| | **4. BURNER FUEL FILTER TO BURNER INLET** | | | |
| | | - | BANJO FITTING | REF. |
| | | 29650N | HOSE ASSEMBLY, 5/16 X 55” FUEL LINE | 1 |
| | | 26767 | FITTING, #5 HOSE PUSH-ON | 1 |
| | | 26756N | ADAPTER, 5/16 JIC X 1/4NPT | 1 |

©2026 by Crafco All Rights Reserved

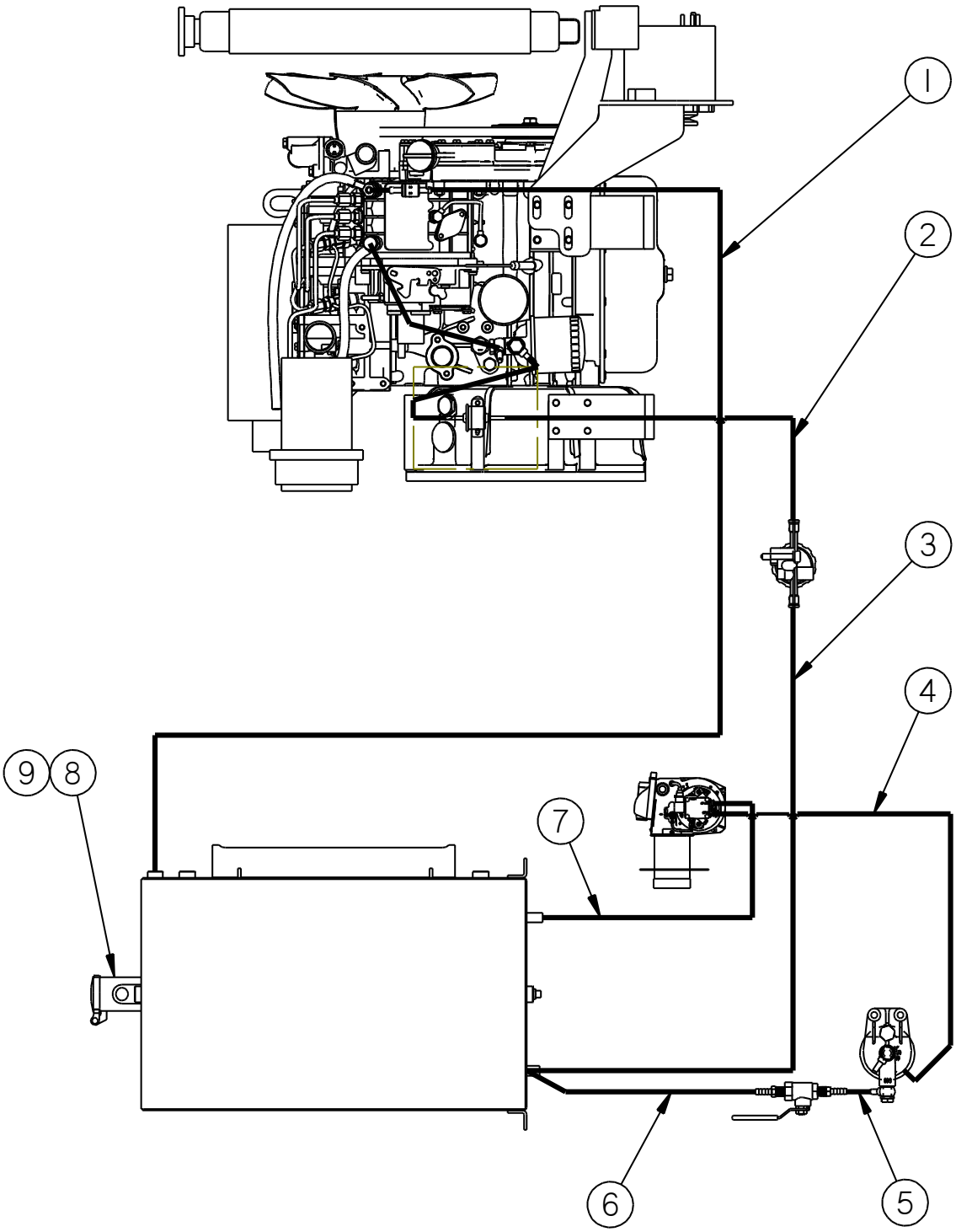


Fig. 9-24 Diesel Fuel Line Schematic – (43600DX continued)

**Table 9-24 Diesel Fuel Line Schematic – (43600DX continued)**

| FIG. | ITEM | PART NO. | DESCRIPTION | QTY. |
|---|---|---|---|---|
| Fig. 9-24 | **5. BALL VALVE TO BURNER FUEL FILTER** | | | |
| | | 29984 | HOSE BARB, 1/4MPT X 5/16 HOSE | 1 |
| | | 29648N | HOSE ASSEMBLY, 5/16 X 10” FUEL LINE | 1 |
| | | 47345N | FILTER ASSEMBLY | 1 |
| | 6. **DIESEL TANK TO BALL VALVE** | | | |
| | | 26782 | FITTING, 1/4” MPT X 5/16 JIC ELBOW | 1 |
| | | 26767 | FITTING, #5 HOSE PUSH-ON | 1 |
| | | 29663N | HOSE ASSEMBLY, 5/16 X 107” FUEL LINE | 1 |
| | | 29984 | HOSE BARB, 1/4MPT X 5/16 HOSE | 1 |
| | 7. **BURNER RETURN TO DIESEL TANK** | | | |
| | | 26756N | ADAPTER, 5/16 JIC X 1/4NPT | 1 |
| | | 26767 | FITTING, #5 HOSE PUSH-ON | 1 |
| | | 29590 | HOSE ASSEMBLY, 5/16 X 80” FUEL LINE | 1 |
| | | 26767 | FITTING, #5 HOSE PUSH-ON | 1 |
| | | 26782 | FITTING, 1/4” MPT X 5/16 JIC ELBOW | 1 |
| | 8 | 43732N | FILLER CAP, NON-VENTED FUEL TANK | 1 |
| | 9 | 43733N | FUEL TANK FILLER NECK (NO CAP) | 1 |

©2026 by Crafco All Rights Reserved

## 9.16 Electrical Schematic: (43600 & 57200)

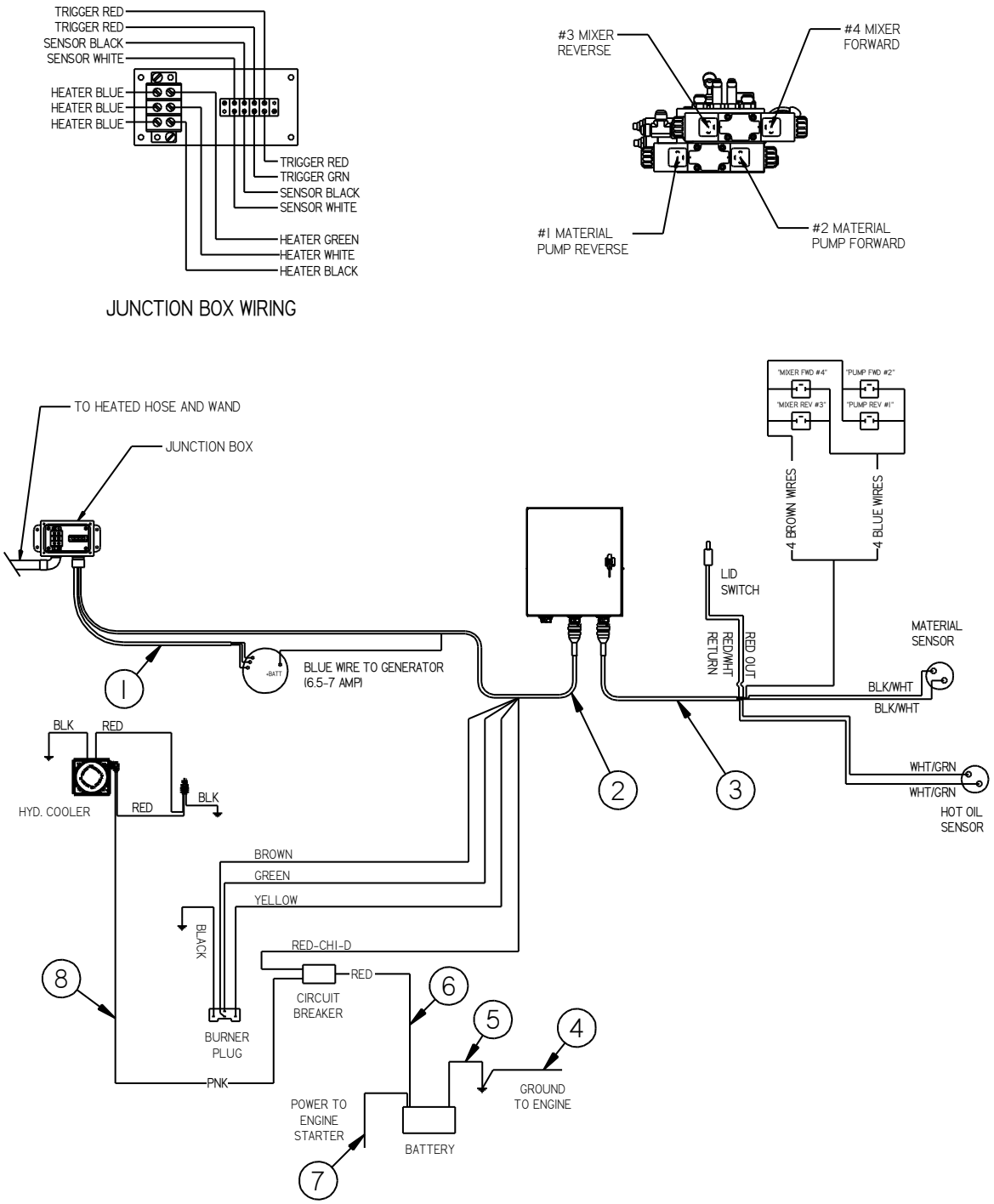


**Fig. 9-25 Electrical Schematic: (43600 & 57200)**

### Table 9-25 Electrical Schematic: (43600 & 57200)

| FIG. | ITEM | PART NO. | DESCRIPTION | QTY. |
|---|---|---|---|---|
| Fig. 9-25 | 1 | 47549N | CABLE ASSEMBLY, HOSE | 1 |
| | 2 | 38230N | HARNESS - CHASSIS, SS125D | 1 |
| | 3 | 38330N | HARNESS - TANK SS125D | 1 |
| | 4 | 27174 | BATTERY CABLE, ENGINE TO GROUND LUG | 1 |
| | 5 | 24010 | BATTERY CABLE, NEGATIVE TO GROUND LUG | 1 |
| | 6 | 52310 | WIRE ASSY, CIRC BRKR TO BATT | 1 |
| | 7 | 24015 | BATTERY CABLE, POSITIVE TO ENGINE | 1 |
| | 8 | 45569 | OIL COOLER WIRING HARNESS | 1 |
| | NS | 45965 | HARNESS - ENGINE EXT, DEC, 100" | 1 |
| | NS | 44896N | ENGINE HARNESS, ISUZU 3CH1 | 1 |

©2026 by Crafco All Rights Reserved

## 9.17 Electrical Schematic: (43600DX)

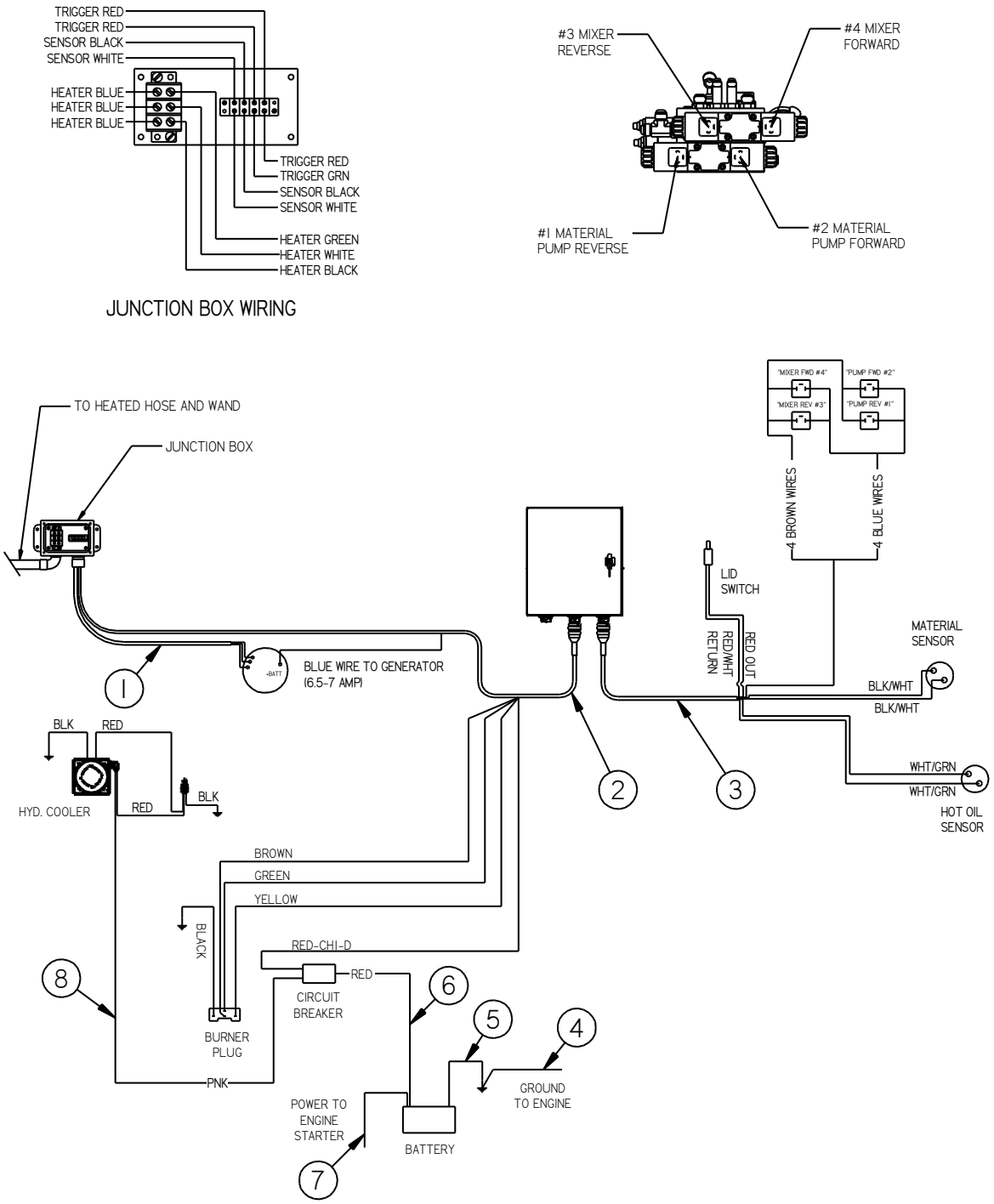


Fig. 9-26 Electrical Schematic: (43600DX)

### Table 9-26 Electrical Schematic: (43600DX)

| FIG. | ITEM | PART NO. | DESCRIPTION | QTY. |
|---|---|---|---|---|
| Fig. 9-26 | 1 | 47498N | CABLE ASSEMBLY, HOSE | 1 |
| | 2 | 38230N | HARNESS - CHASSIS, SS125D | 1 |
| | 3 | 38330N | HARNESS - TANK SS125D | 1 |
| | 4 | 27174 | BATTERY CABLE, ENGINE TO GROUND LUG | 1 |
| | 5 | 24010 | BATTERY CABLE, NEGATIVE TO GROUND LUG | 1 |
| | 6 | 52310 | WIRE ASSY, CIRC BRKR TO BATT | 1 |
| | 7 | 24015 | BATTERY CABLE, POSITIVE TO ENGINE | 1 |
| | 8 | 45569 | OIL COOLER WIRING HARNESS | 1 |
| | NS | 45965 | HARNESS - ENGINE EXT, DEC, 100" | 1 |
| | NS | 44896N | ENGINE HARNESS, ISUZU 3CH1 | 1 |
| | NS | 48425N | ENGINE HARNESS, DEUTZ D1.2 | 1 |
| | NS | 48424N | ENGINE ADAPTER HARNESS, DEUTZ D1.2 | 1 |

©2026 by Crafco All Rights Reserved

### 9.18 Wand Assembly: PN 52200 All Models

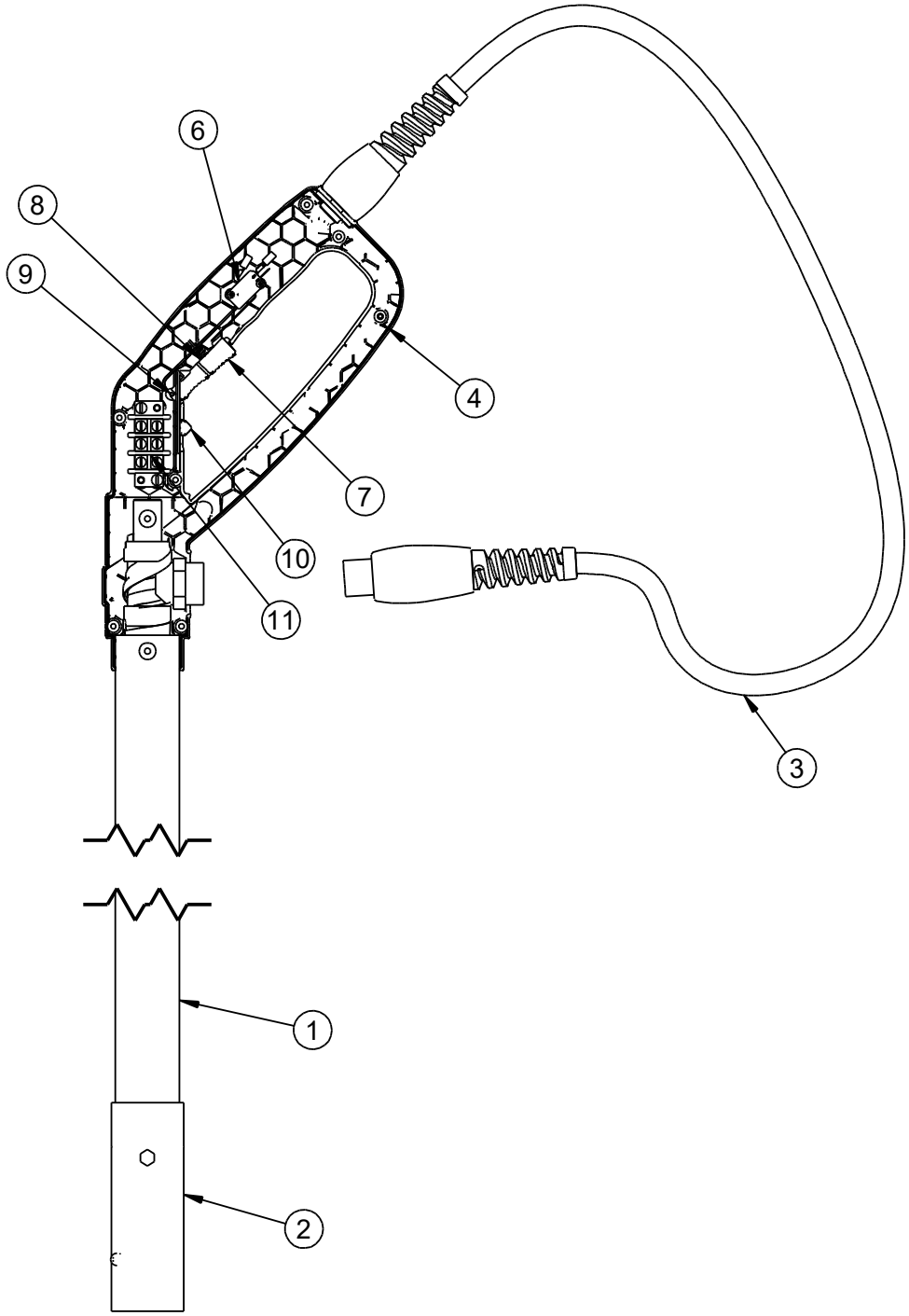


**Fig. 9-27 Wand Assembly: PN 52200 All Models**

### Table 9-27 Wand Assembly: PN 52200 All Models

| FIG. | ITEM | PART NO. | DESCRIPTION | QTY. |
|---|---|---|---|---|
| Fig. 9-27 | 1 | 52204 | COVER, WAND | 1 |
| | 2 | 50278 | TIP GUARD, LONG CLAMP ON | 1 |
| | 3 | 52206 | CORD ASSEMBLY | 1 |
| | 4 | 52201RN | HANDLE, WAND – RIGHT (W/INSERTS) | 1 |
| | 5 | 52201LN | HANDLE, WAND – LEFT (NOT SHOWN) | 1 |
| | 6 | 52208 | SWITCH, WAND | 1 |
| | 7 | 52202N | ACTUATOR | 1 |
| | 8 | 52207 | SPRING, ACTUATOR | 1 |
| | 9 | 52209 | PIN, ACTUATOR | 1 |
| | 10 | 52203N | LOCK, TRIGGER | 1 |
| | 11 | 51656 | TERMINAL STRIP | 1 |

©2026 by Crafco All Rights Reserved

### 9.19 Super Shot Flex Boom

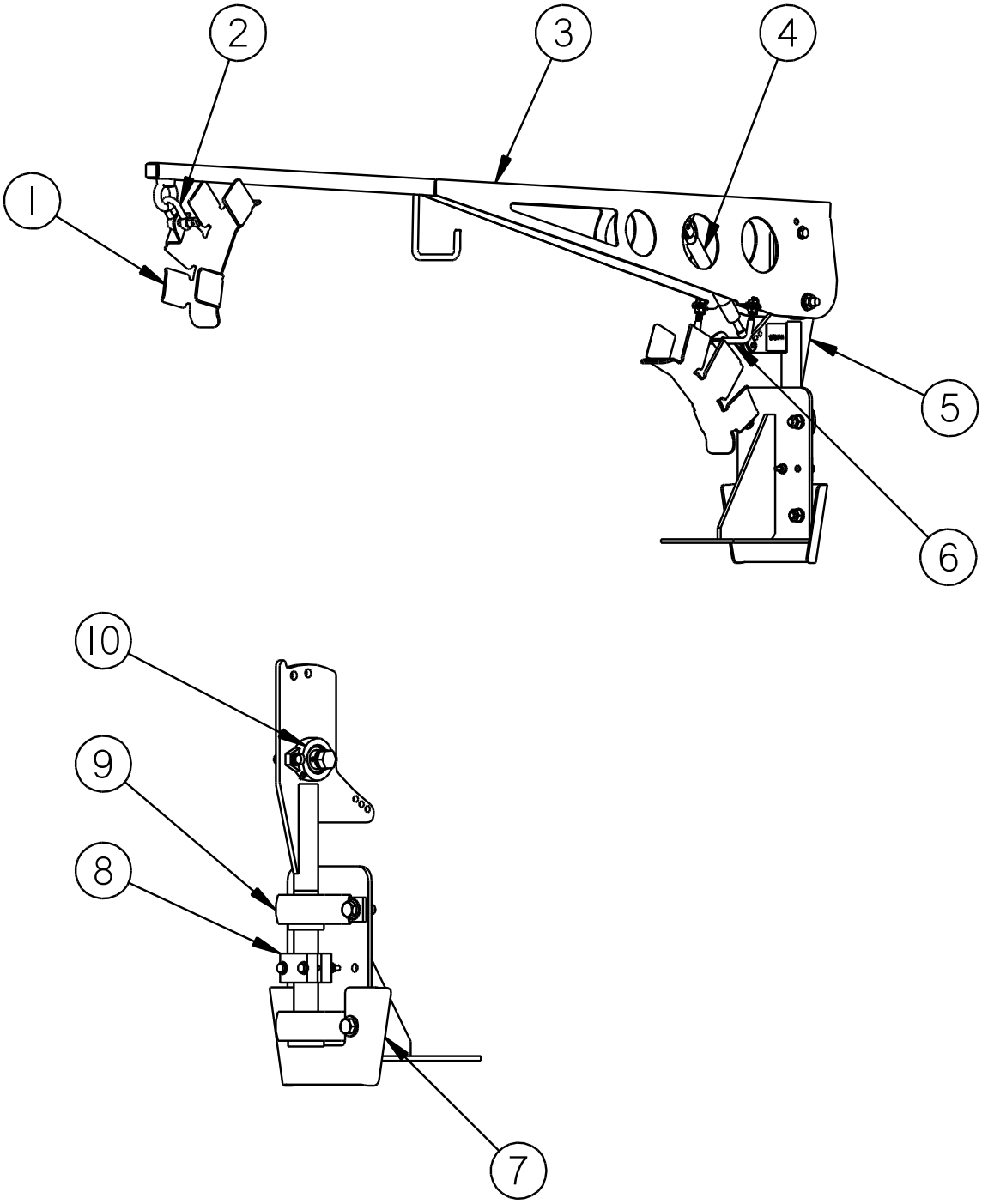


Fig. 9-28 Super Shot Flex Boom

### Table 9-28 Super Shot Flex Boom

| FIG. | ITEM | PART NO. | DESCRIPTION | QTY. |
|---|---|---|---|---|
| Fig. 9-28 | 1 | 52532N | HOSE HANGER | 2 |
| | 2 | 20144 | 3/8" CHAIN SHACKLE W/SCREW PIN | 1 |
| | 3 | 52510N | BOOM ARM ASSY, SS FLEX BOOM | 1 |
| | 4 | 52531S | BOOM STRUT - SERVICE PART | 1 |
| | 5 | 52520N | BOOM MAST ASSY, SS FLEX BOOM | 2 |
| | 6 | 52533N | BOOM U-BOLT | 1 |
| | 7 | 52534N | HOSE GUARD, SS FLEX BOOM | 1 |
| | 8 | 46333 | PAD, BRAKE-BOOM BRAKE | 2 |
| | 9 | 45553 | BEARING, PILLOW BLOCK | 2 |
| | 10 | 52530N | BOOM BEARING | 2 |

©2026 by Crafco All Rights Reserved

### 9.20 Optional Engine Cover for 3CH1 Engine All Models

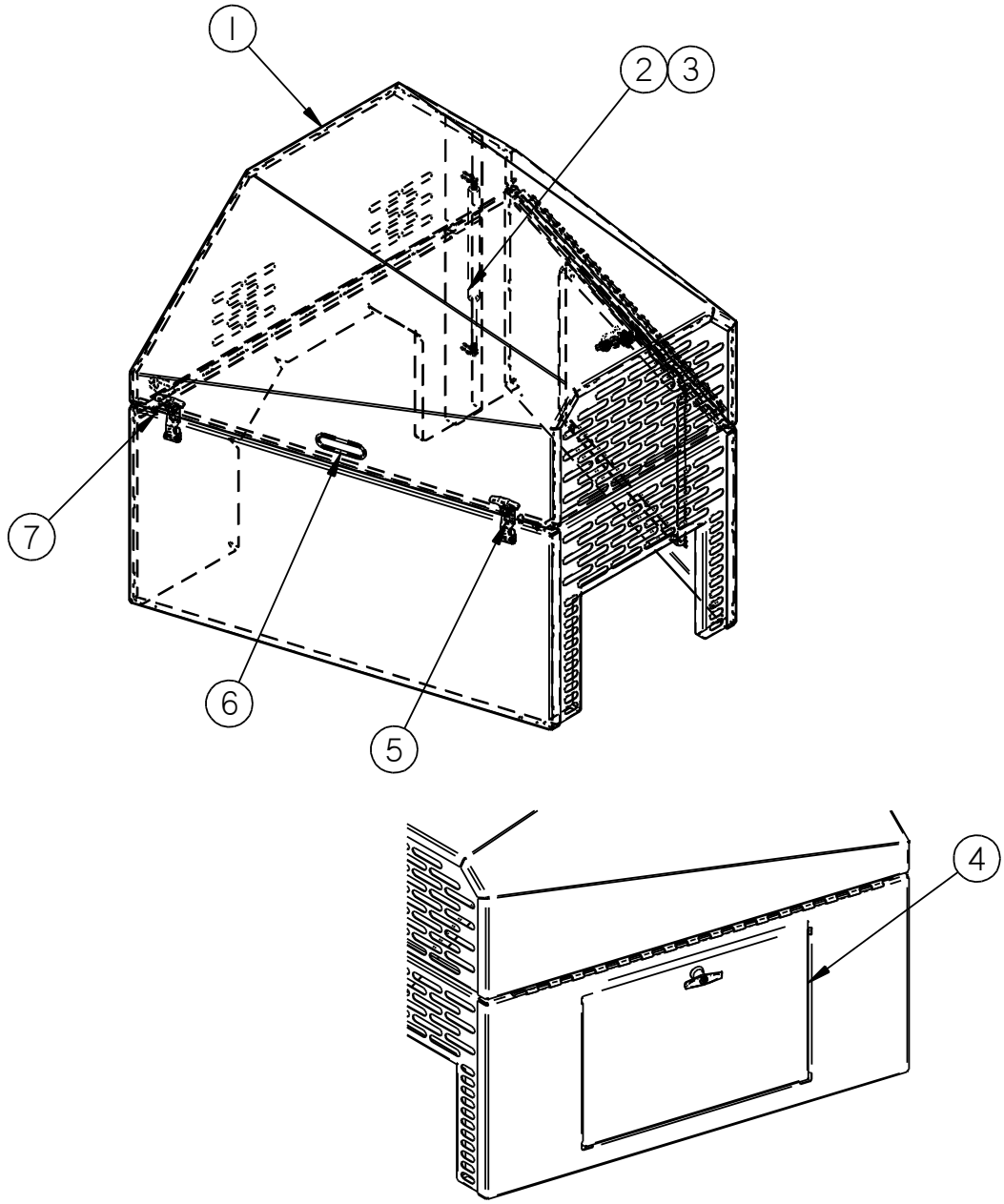


Fig. 9-29 Optional Engine Cover for 3CH1 Engine All Models

### Table 9-29 Optional Engine Cover for 3CH1 Engine All Models

| FIG. | ITEM | PART NO. | DESCRIPTION | QTY. |
|---|---|---|---|---|
| Fig. 9-29 | 1 | 45535 | OPTIONAL ENGINE COVER | 1 |
| | 2 | 46748 | GAS SHOCK | 1 |
| | 3 | 46749 | BALL SOCKET | 2 |
| | 4 | 45619P | SIDE DOOR ASSY, ENGINE COVER PAINTED | 1 |
| | 5 | 45600 | LATCH, RUBBER “T” HANDLE REPLACEMENT | 2 |
| | 6 | 43746 | NEOPRENE HANDLE | 1 |
| | 7 | 45496N | BOLT ON BUMPER | 2 |
| | N/A | 46374 | OPTIONAL ENGINE COVER INSULATION KIT | 1 |

©2026 by Crafco All Rights Reserved

# Chapter 10 Tools and Accessories

## 10.0 Tools and Accessories

**Crafco Applicator Disk**
27162 – 3” Disk Assembly
27163 – 4” Disk Assembly
27164 – 6” Disk Assembly

**Crafco Swivel Disk Applicator**
27120 – 3” Swivel Applicator
27130 – 4” Swivel Applicator

**Crafco Sealing Foot/Flush**
27154 – 1/4” Flush
27155 – 3/8” Flush

**Crafco Sealing Foot/Protruded**
27159 – 1/4” Protruding
27160 – 3/8” Protruding

**Crafco Joint Sealing Tip**
27146 – 1/4” Sealing Tip
27147 – 3/8” Sealing Tip

**Crafco Round Sealing Tip**
27170 – 3/8” Sealing Tip
27171 – 1/2” Sealing Tip

**Crafco Cold Air Lance - 42648**

©2026 by Crafco All Rights Reserved

# Chapter 10 Tools and Accessories

**Crafco Heavy Duty Squeegee with Aluminum Handle - 27199**
27195 – Replacement Blade

**Super Shot Drip Stopper**
Use with 50270 Duckbill
27114 – Tip Adapter
27115 – Shroud, Tip Adapter

**Crafco Duckbill - 50270**

**Crafco Pour Pot with Wheels - 40200**

**Crafco Hand Held Pour Pot - 40201**

**Crafco High Velocity Heat Lance - 45650**

©2026 by Crafco All Rights Reserved

**Crafco Hand Torch**
**W/ 20ft. Hose – 25012**
**W/ 12ft. Hose – 25016**
**W/ 50ft. Hose - 25021**

©2026 by Crafco All Rights Reserved

©2026 Crafco